TOYOTA

Toyota Motor Sales, U.S.A., Inc.
19001 South Western Avenue, S207
Torrance, CA 90509-2991

TMS-NTC-13091
April 3, 2013

Recall Management Division
National Highway Traffic Safety Administration
1200 New Jersey Avenue, SE
Washington, DC 20590

Re: Toyota Safety Recall 13V-029 – Updated Remedy Instructions

To whom it may concern,

Please find attached Updated Remedy Instructions for Toyota Safety Recall 13V-029 on the following Toyota vehicles:

2003 through 2004 Model Year Corolla and Corolla Matrix

If you have any questions regarding this matter, please contact me at (310) 468-5316.

Sincerely,

Quality Compliance Assistant Manager

Attachments:
- Toyota 13V-029 (D0B) Updated Remedy Instructions

Original sent to Dealers 3/12/13
Update sent 4/02/13

IMPORTANT UPDATE APRIL 2, 2013

TECHNICAL INSTRUCTIONS

FOR

SAFETY RECALL D0B

SUB HARNESS (FILTER) INSTALLATION

2003 – 2004 MODEL YEAR COROLLA

UPDATED APRIL 2, 2013

Updated 4/2/13

- **The inspection process at STEPS 1 & 2 have been updated to clarify the inspection process (SECTION VI)**

I. OPERATION FLOW CHART

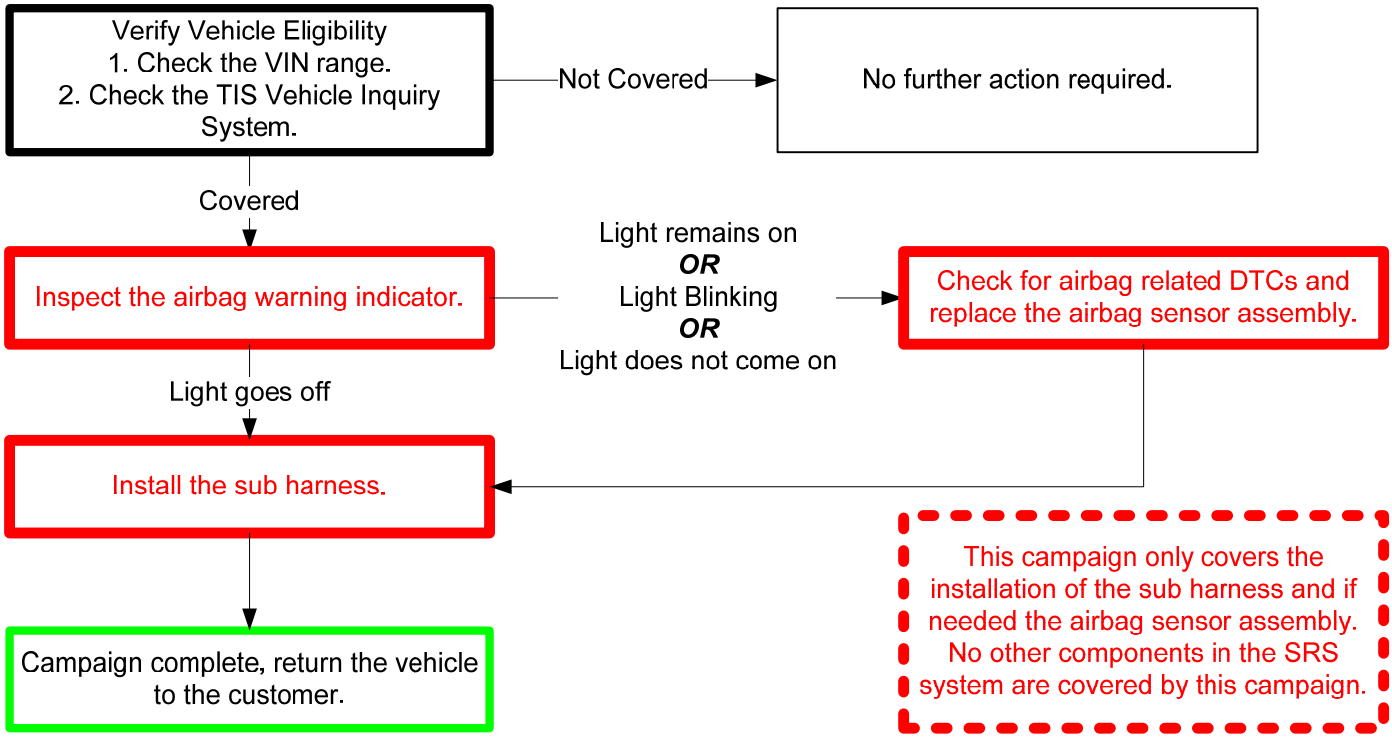

II. IDENTIFICATION OF AFFECTED VEHICLES

A. COVERED VIN RANGE

WMI	Year	VIN Range	
		VDS	Range
1NX	2003	BR32E	Z000001-Z190446
		BR38E	Z000012-Z190424
	2004	BR32E	Z190447-Z342397
		BR38E	Z190512-Z342398
2T1	2003	BR32E	C000086-C165641
		BR38E	C000082-C165643
	2004	BR32E	C165645-C318812
		BR38E	C167737-C318750
JTD	2003	BR32E	0002007-0051596
			2000000-2016855
		BR38E	0006684-0051592
			2000002-2016852
	2004	BR32E	0051487-0053025
			2016856-2048916
		BR38E	0051779-0053026
			2016863-2048900

NOTE:

- Check the TIS Vehicle Inquiry System to confirm the VIN is involved in this Safety Recall, and that the campaign has not already been completed prior to dealer shipment or by another dealer.
- TMS warranty will not reimburse dealers for repairs conducted on vehicles that are not affected or were completed by another dealer.

III. PREPARATION

A. PARTS

All vehicles require the installation of this kit.

Part Number	Part Description	Quantity
04002-66112	Airbag Harness Kit*	1

*The kit above includes the following parts.

–	Airbag sub harness	1
–	Water guard sheet	1
–	Cable tie	4*

*Only 2 cable ties are needed for the repair, 2 extra ties are also provided as supplements.

This part should only be replaced if the airbag warning indicator behaves as indicated in STEP 1. If it is identified that the airbag sensor assembly requires replacement, follow the MAC process outlined in the dealer letter for parts ordering. Parts will be placed on recovery and subject to claim debit for inappropriate replacement.

Part Number	Part Description	Quantity
89170-02190	Airbag Sensor Assembly (Without Side Airbag)	1
89170-02200	Airbag Sensor Assembly (With Side Airbag)	1

B. TOOLS & EQUIPMENT

- Standard hand tools
- Molding remover set
- Torque wrench
- Tape measure
- Techstream
- Vinyl tape

IV. BACKGROUND

The Electronic Control Module (ECM) for the Supplemental Restraint System (SRS) in these vehicles could have been manufactured with integrated circuits that are susceptible to internal short circuiting when exposed to certain electrical noise from various vehicle electrical components. If internal short circuiting occurs, the front airbag(s) and/or seat belt pretensioners could inadvertently deploy. An airbag that deploys inadvertently can, under some circumstances, increase the risk of minor injury and the possibility of a crash.

V. COMPONENTS

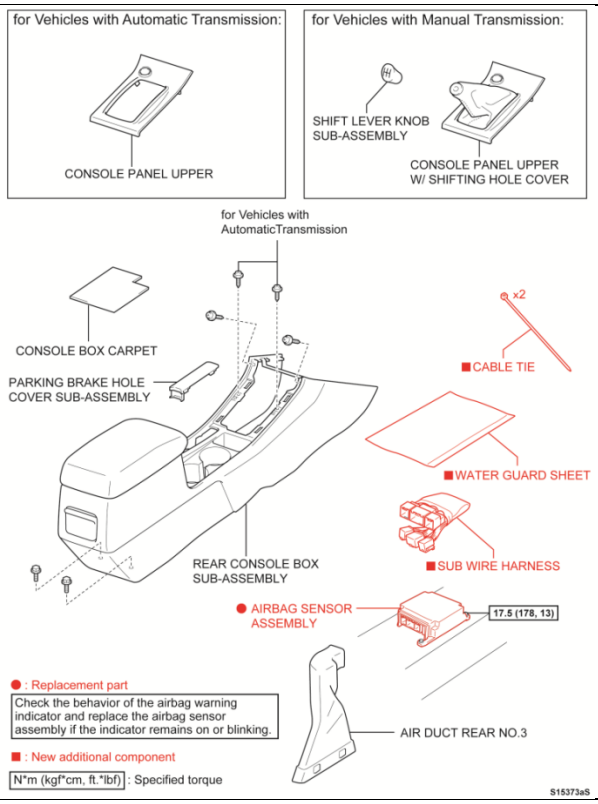

VI. WORK PROCEDURE

- **Before starting STEP 1, confirm the key has been turned off for more than 5 minutes.**
- **Follow STEP 1 exactly as described. *DO NOT* cycle the ignition multiple times when performing this inspection.**

1. CHECK THE AIRBAG WARNING INDICATOR

a) Check that the warning indicator comes on when the ignition switch is turned on.

b) After the ignition has been on for approximately 6 seconds check the behavior of the warning indicator.

CONDITION 1	ACTION REQUIRED
Light Remains On ***OR*** Light Blinking ***OR*** Light Does Not Come On	Proceed to **STEP 2 through 22**

CONDITION 2	ACTION REQUIRED
Light Goes Off	Proceed to **STEP 3 through 22** **Note: Skip step 11, *DO NOT* replace the airbag sensor assembly.**

This campaign only covers the installation of the sub harness and if needed the airbag sensor assembly. No other components in the SRS system are covered by this campaign.

2. CHECK FOR DTCs

a) Use Techstream to confirm airbag related DTCs are present in the system.

3. DISCONNECT THE NEGATIVE BATTERY TERMINAL

- **Wait at least 90 seconds after disconnecting the cable from the negative battery terminal to prevent airbag and seat belt pretensioner deployment.**
- **Follow all precautions as outlined on TIS before servicing the SRS system.**

4. SET THE PARKING BRAKE

5. SLIDE THE DRIVER AND PASSENGER SEAT TO THE REARMOST POSITION

6. PERFORM THE FOLLOWING

a) Remove the shift lock release button cover ***(auto trans only).***

b) Move the shift lever to the N position.

c) Remove the parking brake hole cover sub-assembly.

d) Remove the shift lever knob cover sub-assembly ***(manual trans only).***

e) Remove the shifting hole cover sub-assembly ***(manual trans only).***

f) Remove the console panel upper ***(auto trans only).***

g) Remove the console box carpet.

h) Disconnect the auxiliary power outlet harness(s).

i) Remove the screws then the console box.

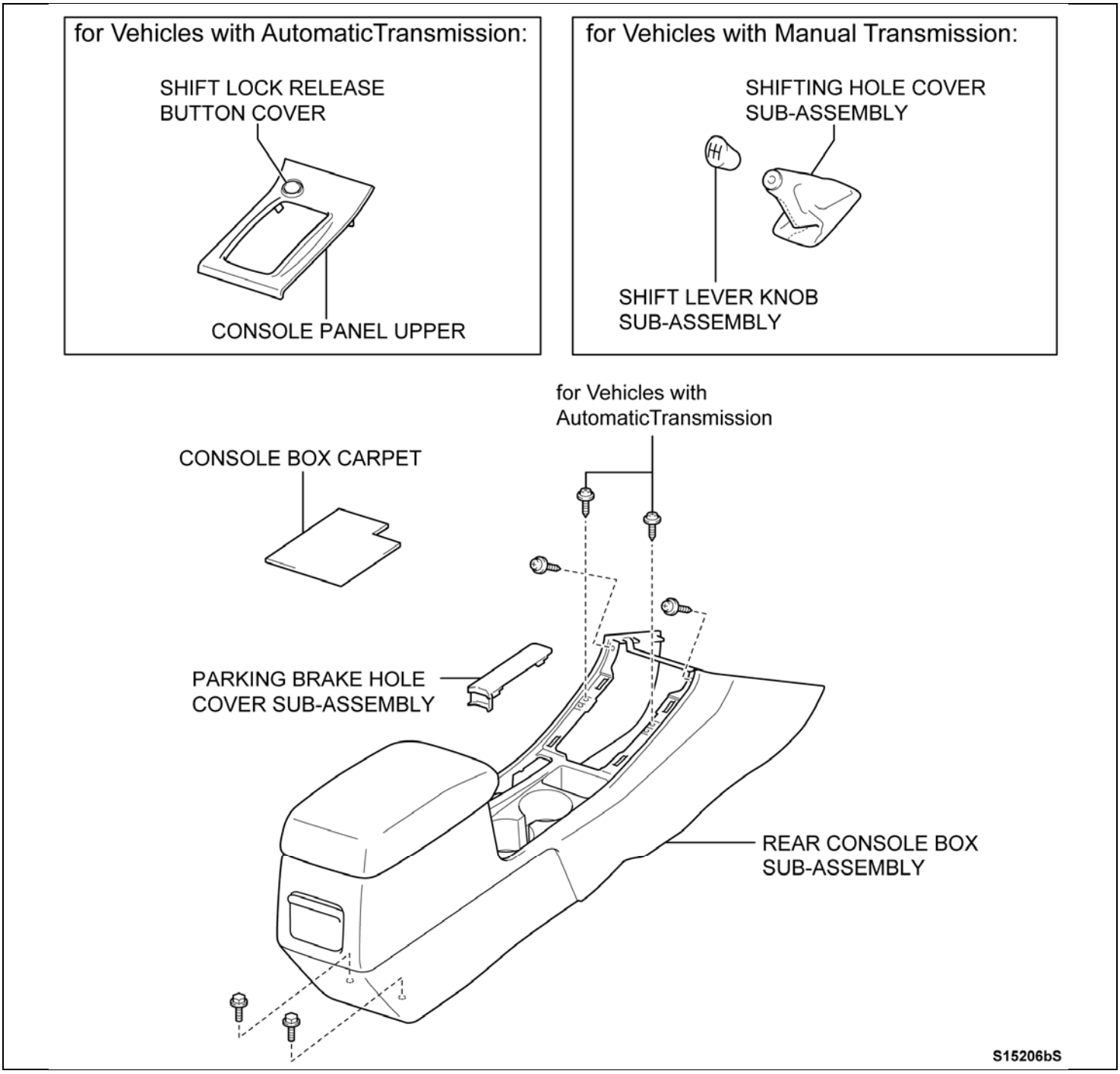

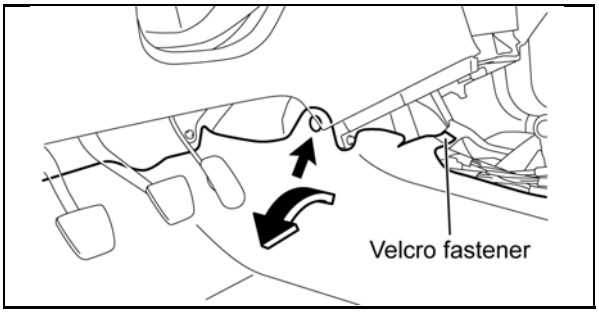

7. REMOVE THE FLOOR CARPET LH

a) Unfasten the Velcro fastener.

b) Remove the clip and pull back the floor carpet.

NOTE:

- **Wear protective gloves.**
- **Remove the floor carpet enough to gain access to the airbag sensor.**

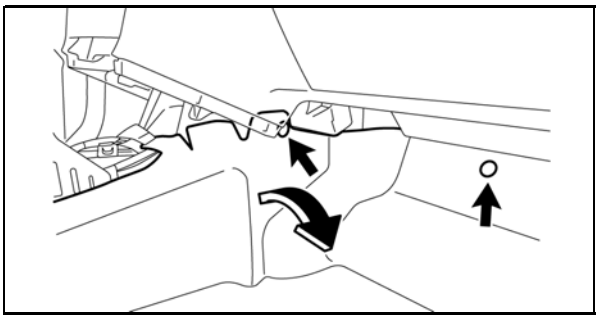

8. REMOVE THE FLOOR CARPET RH

a) Remove the 2 clips and pull back the floor carpet.

NOTE:

- **Wear protective gloves.**
- **Remove the floor carpet enough to gain access to the airbag sensor.**

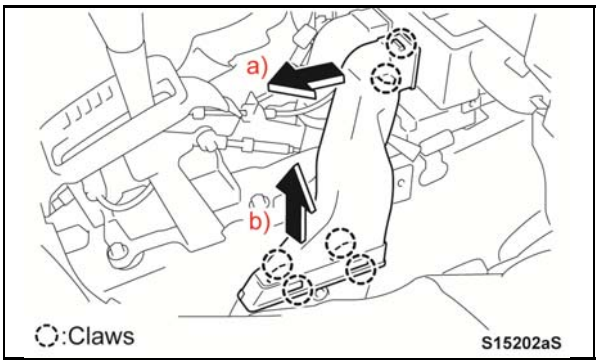

9. REMOVE AIR DUCT REAR No. 3

a) Pull the upper portion of the duct rearward to disengage the 2 upper claws.

b) Pull the bottom portion of the duct upward to disengage the 4 claws and remove the duct.

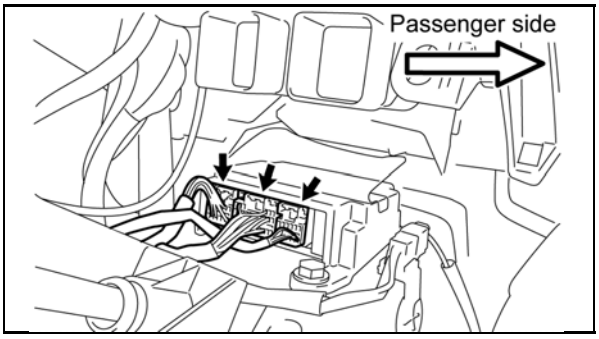

10. DISCONNECT THE AIRBAG SENSOR CONNECTORS

a) Disconnect the 3 connectors.

STOP **Only replace the airbag sensor assembly if 'CONDITION 1' was confirmed during STEP 1. If 'CONDITION 2' was detected, skip this step and proceed to STEP 12.**

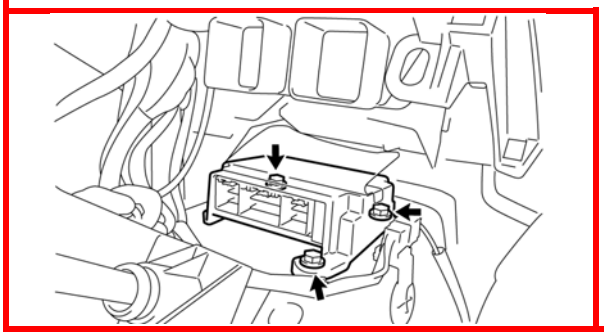

11. REPLACE THE AIRBAG SENSOR ASSEMBLY

a) Remove the 3 bolts and the airbag sensor assembly.

b) Install a ***NEW*** airbag sensor assembly, then continue to **STEP 12**.

Torque: 13ft. lbf (17.5N·m)

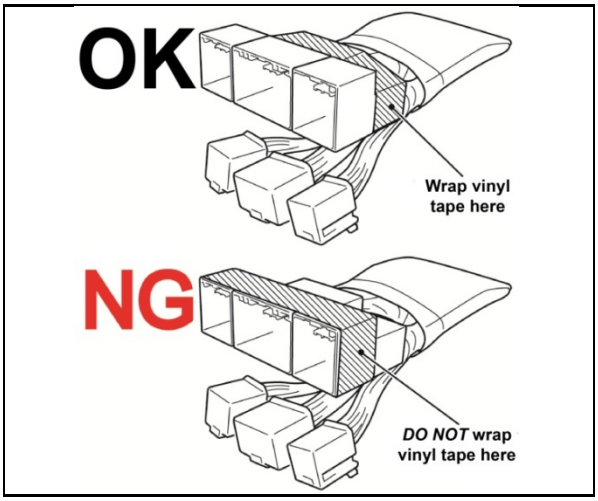

12. PREPARE THE SUB HARNESS

a) To prevent noise, secure the 3 female connectors together with vinyl tape.

STOP **To prevent the tape from interfering with the connectors, *DO NOT* wrap the tape around the front portion of the connectors.**

13. POSITION THE SUB HARNESS

a) Fold back the plastic sheet on the top of the airbag sensor.

NOTE: *DO NOT* remove the plastic sheet as it will cause the sensor label to peel off.

b) Place the ***NEW*** sub harness on top of the airbag sensor.

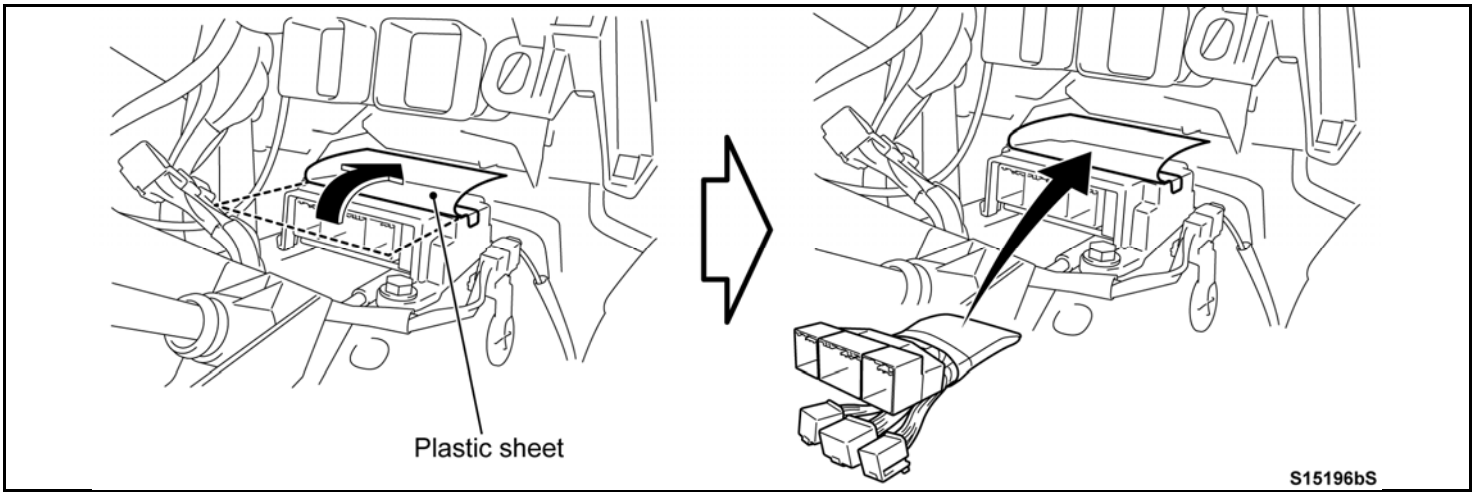

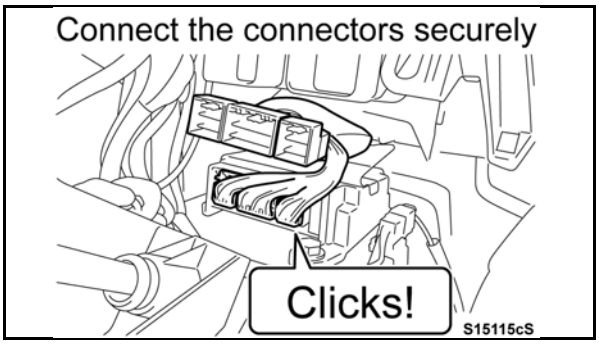

14. CONNECT THE SUB HARNESS

a) Connect the 3 ***NEW*** connectors to the airbag sensor.

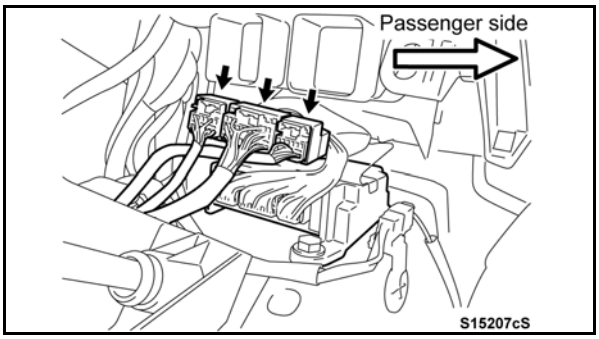

b) Connect the 3 vehicle-side connectors to the ***NEW*** sub harness.

15. INSTALL THE WATER GUARD SHEET

a) Position the water guard sheet over the airbag sensor and sub harness.

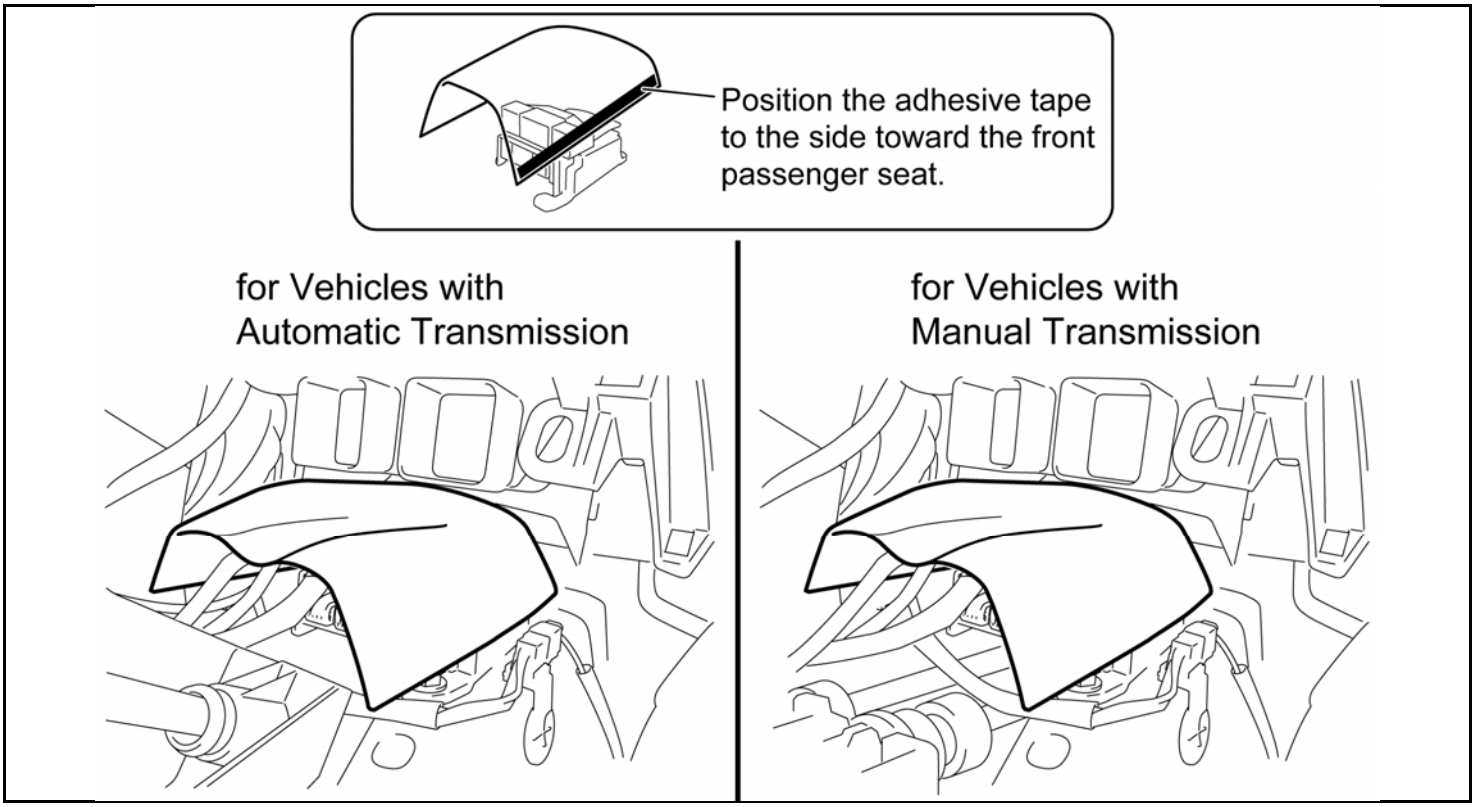

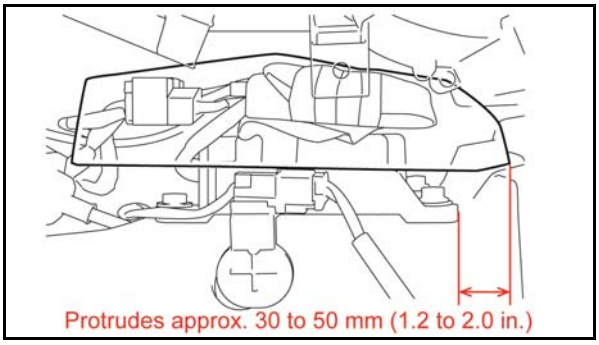

b) Position the sheet so that the edge protrudes 1.2 to 2.0 in. (30 to 50 mm) past the back side of the airbag sensor.

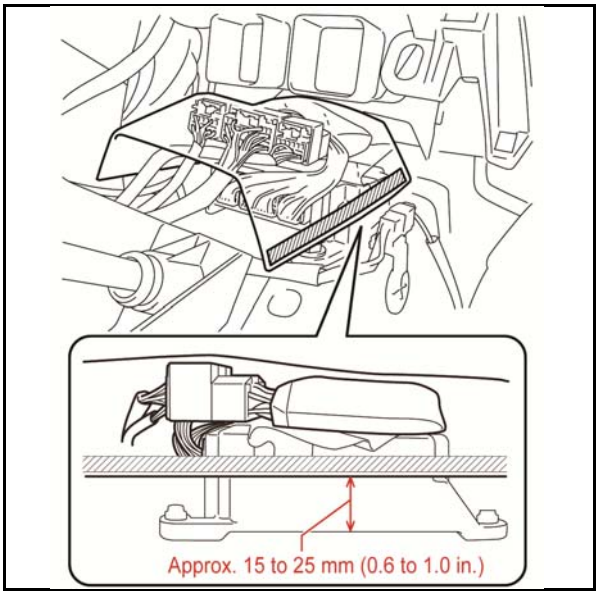

c) Adhere the tape on the sheet to the right side of the airbag sensor approximately 0.6 to 1.0 in. (15 to 25 mm) above the bottom end of the sensor.

d) Confirm the sheet has been positioned correctly.

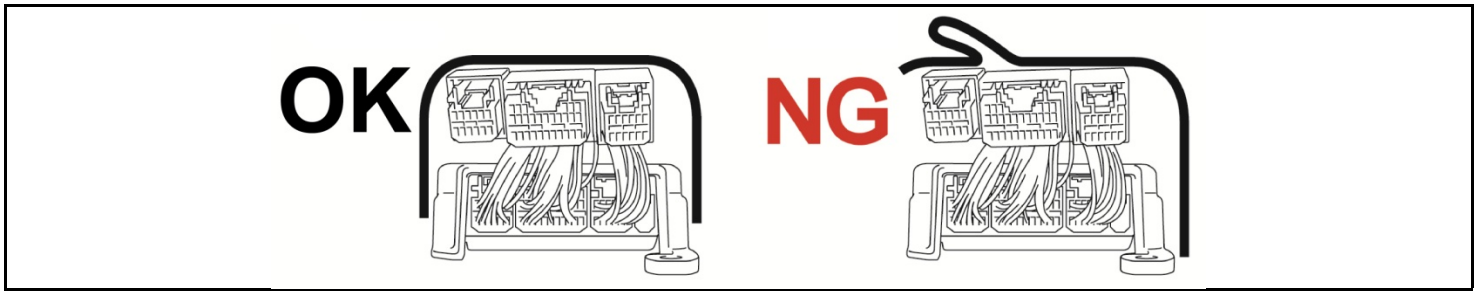

e) Pass a cable tie through the space under the airbag sensor, then connect another cable tie.

NOTE:

- **Only 2 cable ties are needed for the repair, 2 extra ties are also provided as supplements.**
- **If it is difficult to pass the cable underneath the airbag sensor, loosen the 3 bolts that fasten the sensor. Torque: 13ft. lbf (17.5N·m)**

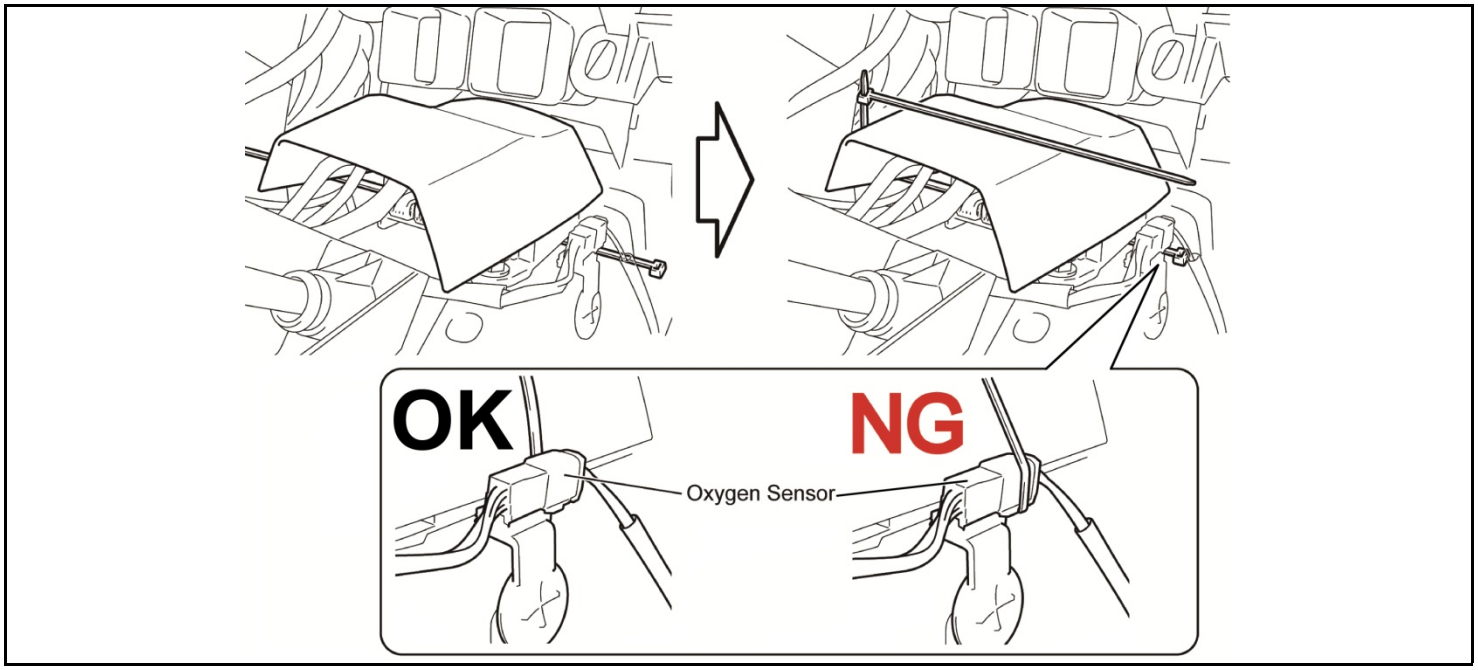

f) Join the cable ties and secure the sub harness, water guard, and airbag sensor together.

g) Cut any excess lengh from the cable tie.

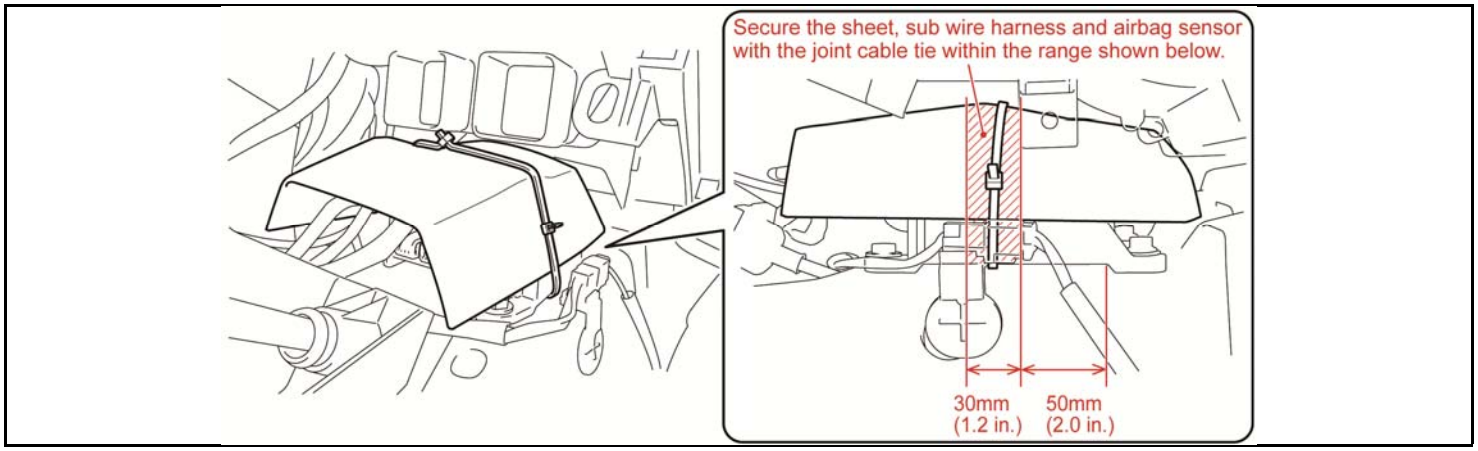

STOP

- **The water guard sheet is critical to prevent water from the air conditionerfrom dripping on the airbag sensor, confirm it is positioned and adhered correctly.**
- ***DO NOT* bind the oxygen sensor harness/connector with the cable ties.**
- **If the cable tie or sheet is affixed incorrectly, the sub harness may not be fixed properly.**

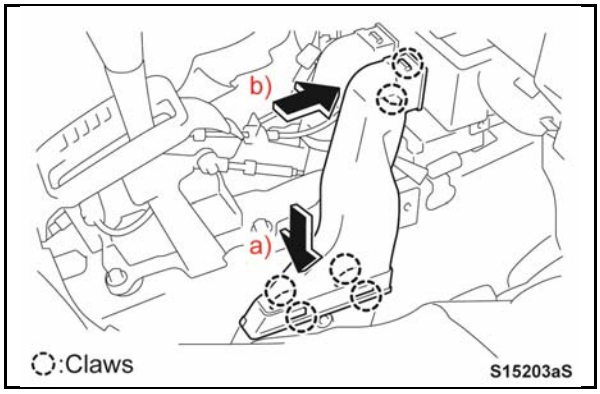

16. REINSTALL AIR DUCT REAR No. 3

a) Engage the 4 claws on the lower portion of the duct.

b) Engage the 2 claws on the upper portion of the duct.

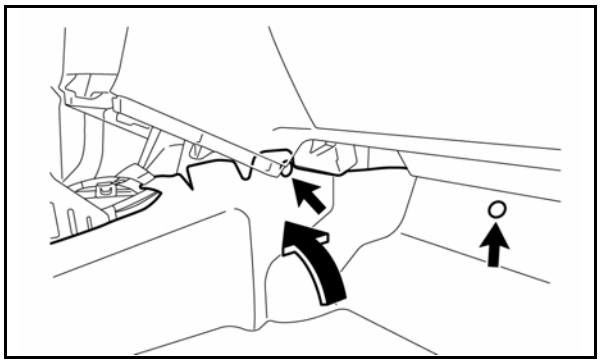

17. REINSTALL THE FLOOR CARPET RH

a) Reposition the carpet and engage the 2 clips

STOP Confirm the floor carpet is secure and the clip is not damaged. Failure to secure the carpet could result in pedal interference.

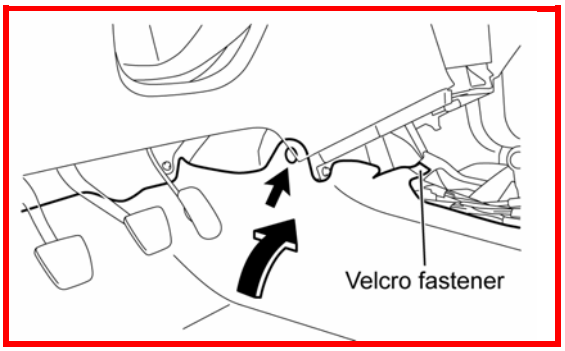

18. REINSTALL THE FLOOR CARPET LH

a) Reposition the carpet and engage the clip.

b) Fasten the Velcro fastener.

19. PERFORM THE FOLLOWING

a) Install the console box and install the screws.

b) Connect the auxiliary power outlet harness(s).

c) Install the console box carpet.

d) Install the console panel upper ***(auto trans only).***

e) Install the shift lever knob cover sub-assembly ***(manual trans only).***

f) Install the shifting hole cover sub-assembly ***(manual trans only).***

g)

h) Install the parking brake hole cover sub-assembly.

i) Install the shift lock release button cover ***(auto trans only).***

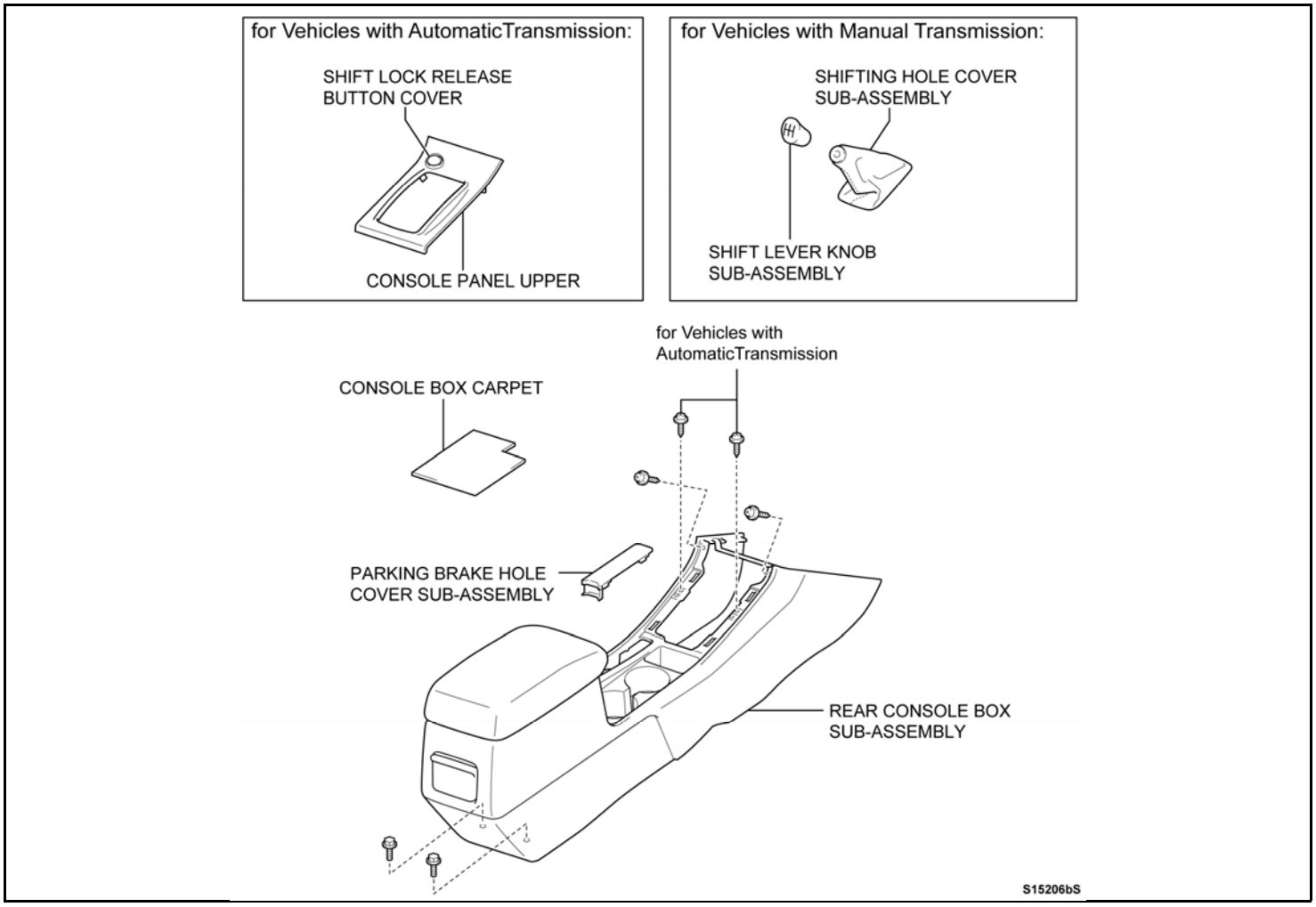

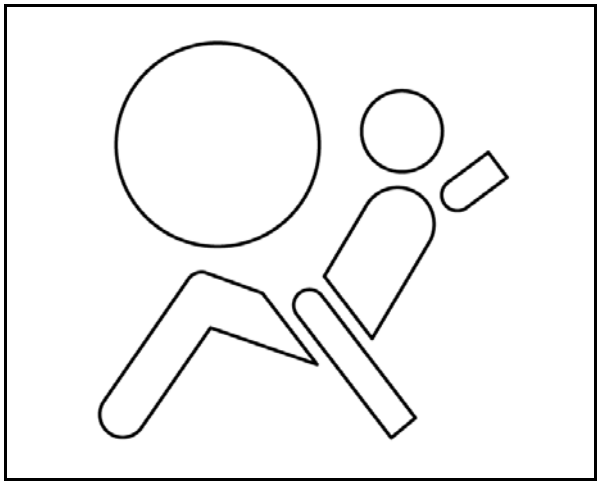

20. RECONNECT THE NEGATIVE BATTERY TERMINAL

21. CHECK THE AIRBAG WARNING INDICATOR

a) Check that the warning indicator illuminates when the ignition is switched on.

b) Confirm that the warning light will go off after about 6 seconds have elapsed after IG on.

- **After the 6 second illumination of the warning indicator, if the indicator goes off then back on or remains on, check for DTCs and confirm the sub harness was installed correctly.**
- **Consult with the customer to determine if they would like to diagnose/repair any remaining concerns.**

22. RESTORE VEHICLE SETTINGS

a) Restore any memory settings.

b) Return the seats to their original positions.

◄ VERIFY REPAIR QUALITY ►

- **Confirm any DTCs prior to beginning this repair**
- **Read all precautions as outlined on TIS before servicing the SRS system**
- **Confirm *ALL* harness connectors are connected securely**
- **Confirm the water guard sheet is secured and positioned correctly**
- **Confirm the sub harness is secured correctly on top of the airbag sensor**
- **Confirm there are no DTCs when the repair is complete**

If you have any questions regarding this update, please contact your area representative.

VII. APPENDIX

A. CAMPAIGN DESIGNATION DECODER

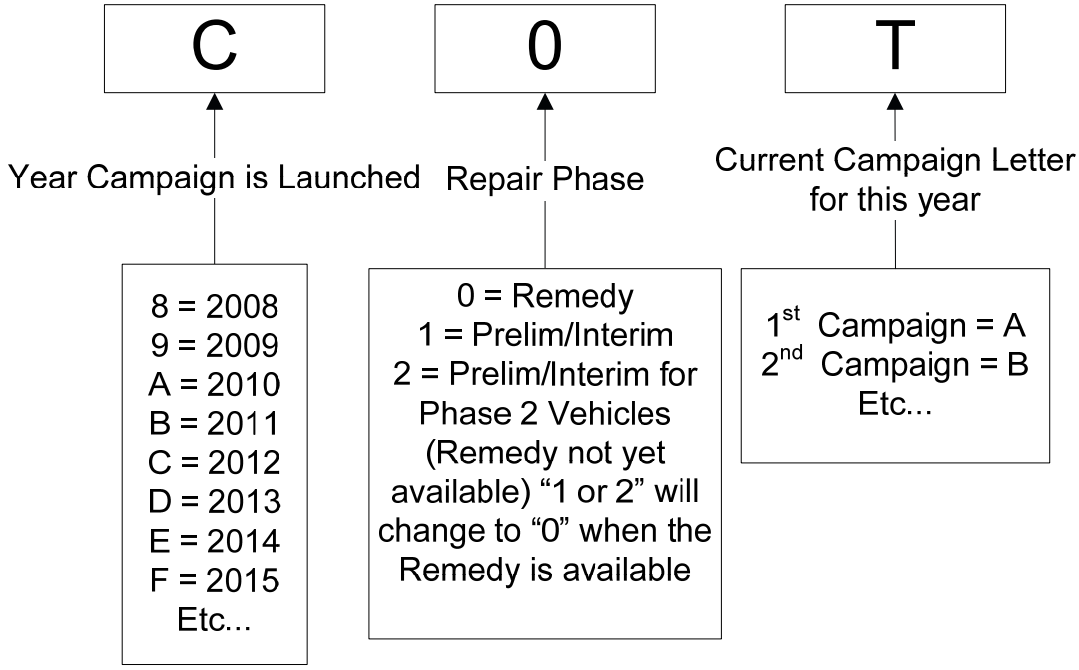

B. CAMPAIGN PARTS DISPOSAL

As required by Federal Regulations, please make sure all campaign parts (original parts) removed from the vehicle are disposed of in a manner in which they will not be reused, ***unless requested for parts recovery return.***

IMPORTANT UPDATE APRIL 2, 2013

TECHNICAL INSTRUCTIONS

FOR

SAFETY RECALL D0B

SUB HARNESS (FILTER) INSTALLATION

2003 – 2004 MODEL YEAR MATRIX

UPDATED APRIL 2, 2013

Updated 4/2/13

- **The inspection process at STEPS 1 & 2 have been updated to clarify the inspection process (SECTION VI)**

I. OPERATION FLOW CHART

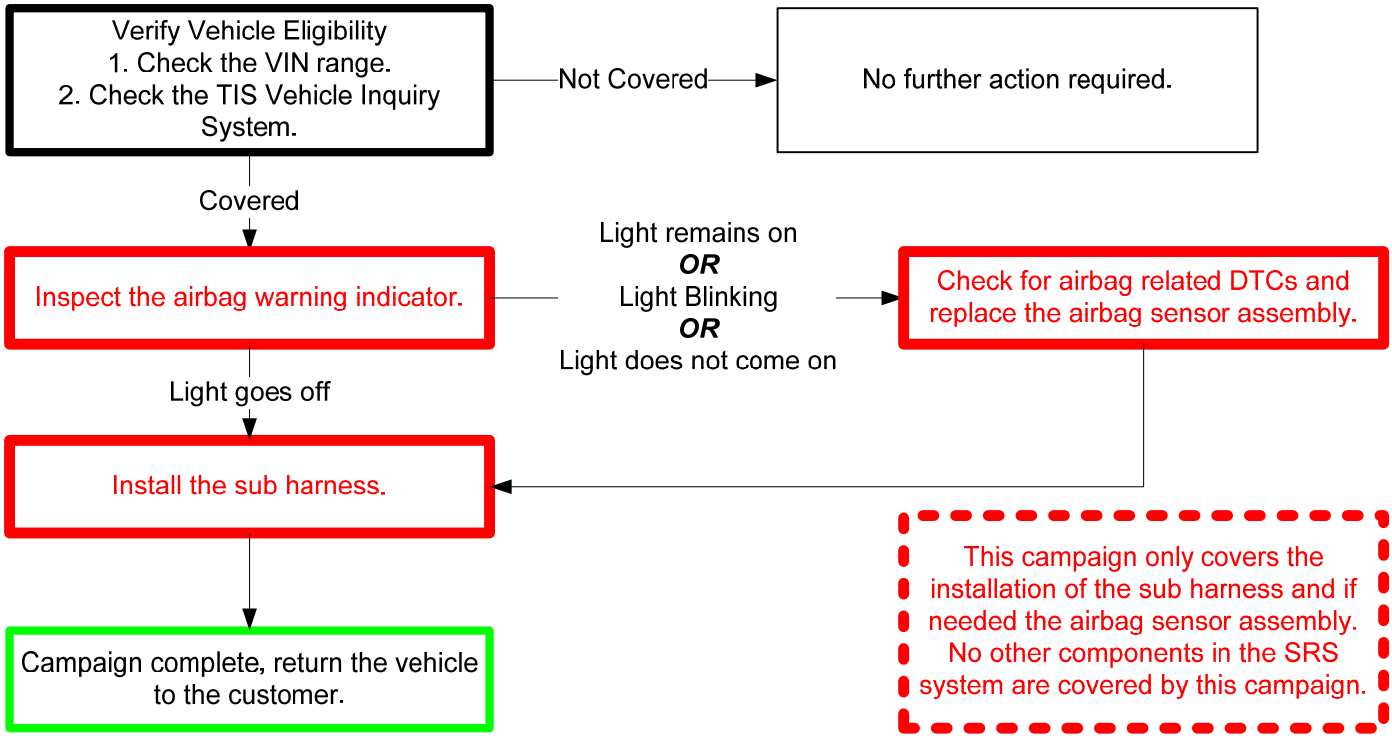

II. IDENTIFICATION OF AFFECTED VEHICLES

A. COVERED VIN RANGE

WMI	Year	VIN Range	
		VDS	Range
2T1	2003	KR32E	C000083-C165642
		KR38E	C000094-C165424
		KY32E	C000098-C165632
		KY38E	C000118-C165579
		LR32E	C000084-C165628
		LR38E	C001163-C165585
	2004	KR32E	C165644-C318778
		KR38E	C165737-C318759
		KY32E	C163607-C318715
		KY38E	C165661-C318453
		LR32E	C165669-C318772
		LR38E	C165650-C318561

NOTE:

- Check the TIS Vehicle Inquiry System to confirm the VIN is involved in this Safety Recall, and that the campaign has not already been completed prior to dealer shipment or by another dealer.
- TMS warranty will not reimburse dealers for repairs conducted on vehicles that are not affected or were completed by another dealer.

III. PREPARATION

A. PARTS

All vehicles require the installation of this kit.

Part Number	Part Description	Quantity
04002-66112	Airbag Harness Kit*	1

*The kit above includes the following parts.

–	Airbag sub harness	1
–	Water guard sheet	1
–	Cable tie	4*

*Only 2 cable ties are needed for the repair, 2 extra ties are also provided as supplements.

This part should only be replaced if the airbag warning indicator behaves as indicated in STEP 1. If it is identified that the airbag sensor assembly requires replacement, follow the MAC process outlined in the dealer letter for parts ordering. Parts will be placed on recovery and subject to claim debit for inappropriate replacement.

Part Number	Part Description	Quantity
89170-01010	Airbag Sensor Assembly (Without Side Airbag)	1
89170-01020	Airbag Sensor Assembly (With Side Airbag)	1

B. TOOLS & EQUIPMENT

- Standard hand tools
- Molding remover set
- Torque wrench
- Tape measure
- Techstream
- Vinyl tape

IV. BACKGROUND

The Electronic Control Module (ECM) for the Supplemental Restraint System (SRS) in these vehicles could have been manufactured with integrated circuits that are susceptible to internal short circuiting when exposed to certain electrical noise from various vehicle electrical components. If internal short circuiting occurs, the front airbag(s) and/or seat belt pretensioners could inadvertently deploy. An airbag that deploys inadvertently can, under some circumstances, increase the risk of minor injury and the possibility of a crash.

V. COMPONENTS

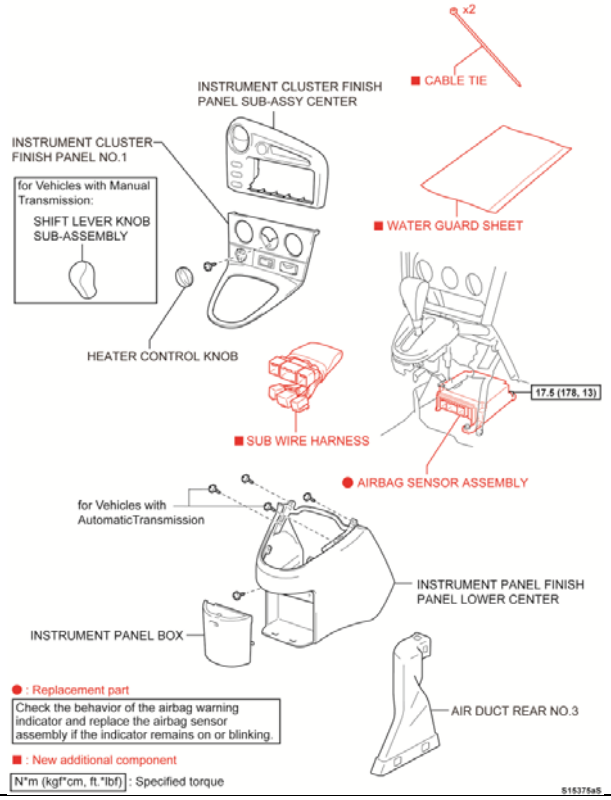

VI. WORK PROCEDURE

- **Before starting STEP 1, confirm the key has been turned off for more than 5 minutes.**
- **Follow STEP 1 exactly as described. *DO NOT* cycle the ignition multiple times when performing this inspection.**

1. CHECK THE AIRBAG WARNING INDICATOR

a) Check that the warning indicator comes on when the ignition switch is turned on.

b) After the ignition has been on for approximately 6 seconds check the behavior of the warning indicator.

CONDITION 1	ACTION REQUIRED
Light Remains On ***OR*** Light Blinking ***OR*** Light Does Not Come On	Proceed to **STEP 2 through 22**

CONDITION 2	ACTION REQUIRED
Light Goes Off	Proceed to **STEP 3 through 22** **Note: Skip step 11, *DO NOT* replace the airbag sensor assembly.**

This campaign only covers the installation of the sub harness and if needed the airbag sensor assembly. No other components in the SRS system are covered by this campaign.

2. CHECK FOR DTCs

a) Use Techstream to confirm airbag related DTCs are present in the system.

3. DISCONNECT THE NEGATIVE BATTERY TERMINAL

- **Wait at least 90 seconds after disconnecting the cable from the negative battery terminal to prevent airbag and seat belt pretensioner deployment.**
- **Follow all precautions as outlined on TIS before servicing the SRS system.**
- **Remove all panels carefully to avoid damage.**

4. **SET THE PARKING BRAKE**
5. **SLIDE THE DRIVER AND PASSENGER SEAT TO THE REARMOST POSITION**
6. **REMOVE THE FOLLOWING**
   a) Instrument cluster finish panel sub-assembly center.
   b) Shift lever knob sub-assembly ***(manual trans only).***
   c) Heater control knob.
   d) Instrument cluster finish panel No. 1.
   e) Instrument panel box.
   f) Instrument panel finish panel lower center.

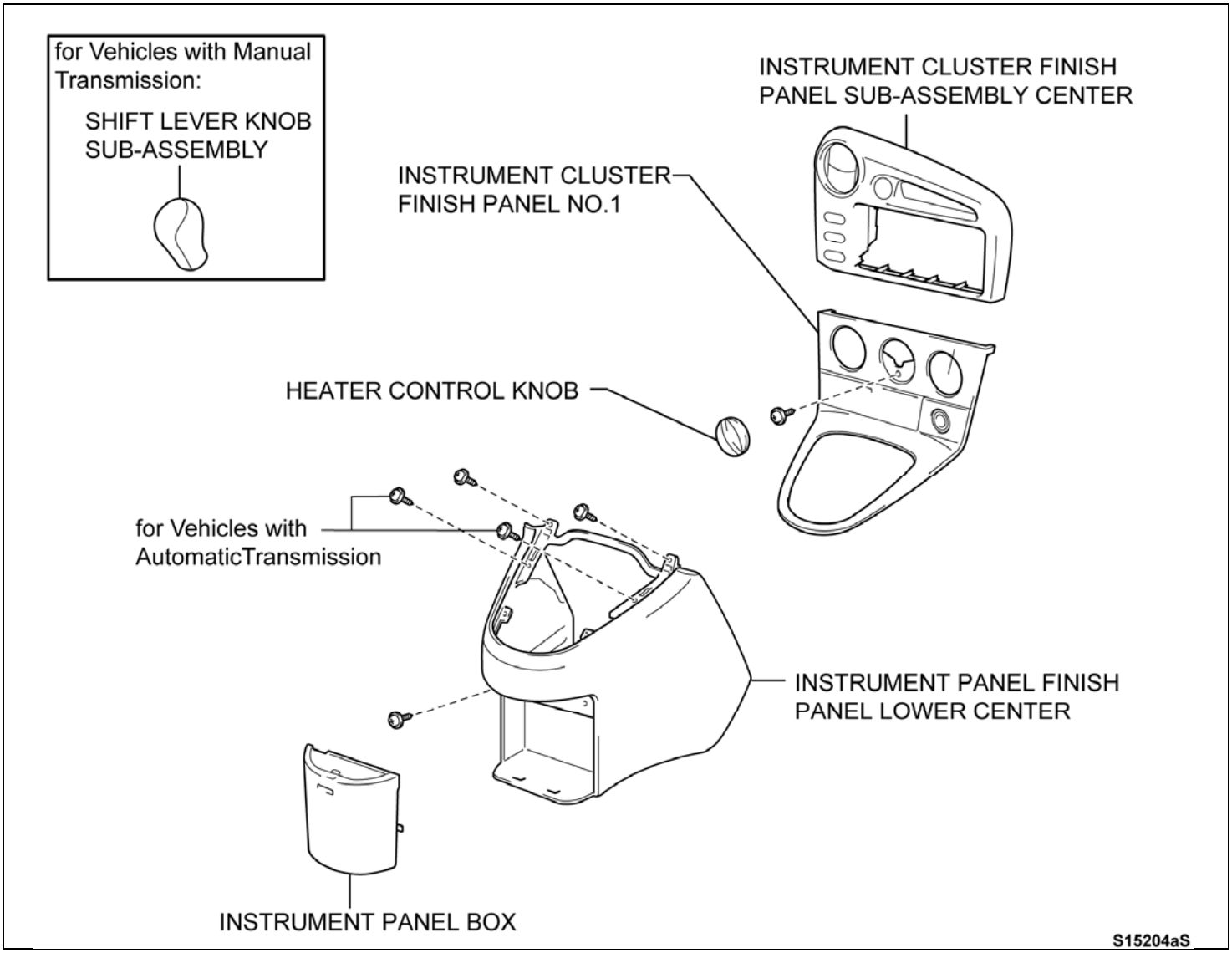

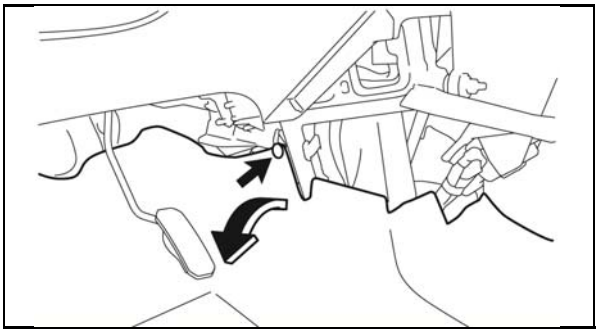

7. REMOVE THE FLOOR CARPET LH

a) Remove the clip and pull back the floor carpet.

NOTE:

- **Wear protective gloves.**
- **Remove the floor carpet enough to gain access to the airbag sensor.**

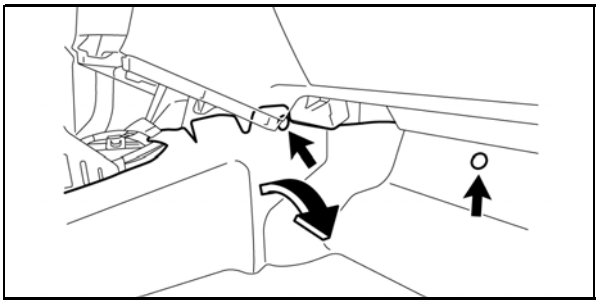

8. REMOVE THE FLOOR CARPET RH

a) Remove the 2 clips and pull back the floor carpet.

NOTE:

- **Wear protective gloves.**
- **Remove the floor carpet enough to gain access to the airbag sensor.**

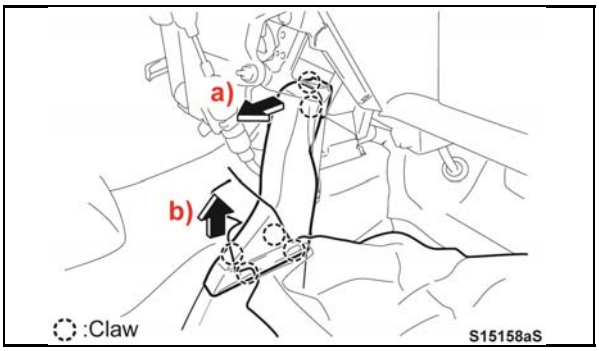

9. REMOVE AIR DUCT REAR No. 3

a) Pull the upper portion of the duct rearward to disengage the 2 upper claws.

b) Pull the bottom portion of the duct upward to disengage the 4 claws and remove the duct.

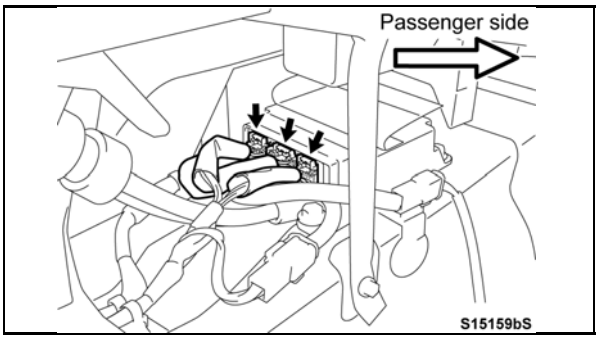

10. DISCONNECT THE AIRBAG SENSOR CONNECTORS

a) Disconnect the 3 connectors.

STOP **Only replace the airbag sensor assembly if 'CONDITION 1' was confirmed during STEP 1. If 'CONDITION 2' was detected, skip this step and proceed to STEP 12.**

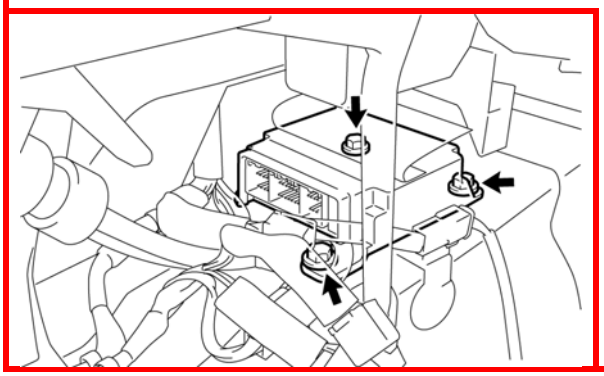

11. REPLACE THE AIRBAG SENSOR ASSEMBLY

a) Remove the 3 bolts and the airbag sensor assembly.

b) Install a ***NEW*** airbag sensor assembly, then continue to **STEP 12**.

Torque: 13ft. lbf (17.5N·m)

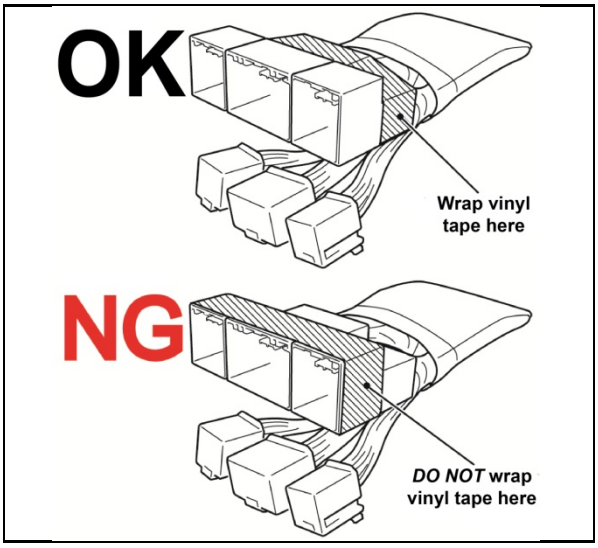

12. PREPARE THE SUB HARNESS

a) To prevent noise, secure the 3 female connectors together with vinyl tape.

STOP To prevent the tape from interfering with the connectors, *DO NOT* wrap the tape around the front portion of the connectors.

13. POSITION THE SUB HARNESS

a) Fold back the plastic sheet on the top of the airbag sensor.

NOTE: *DO NOT* remove the plastic sheet as it will cause the sensor label to peel off.

b) Place the ***NEW*** sub harness on top of the airbag sensor.

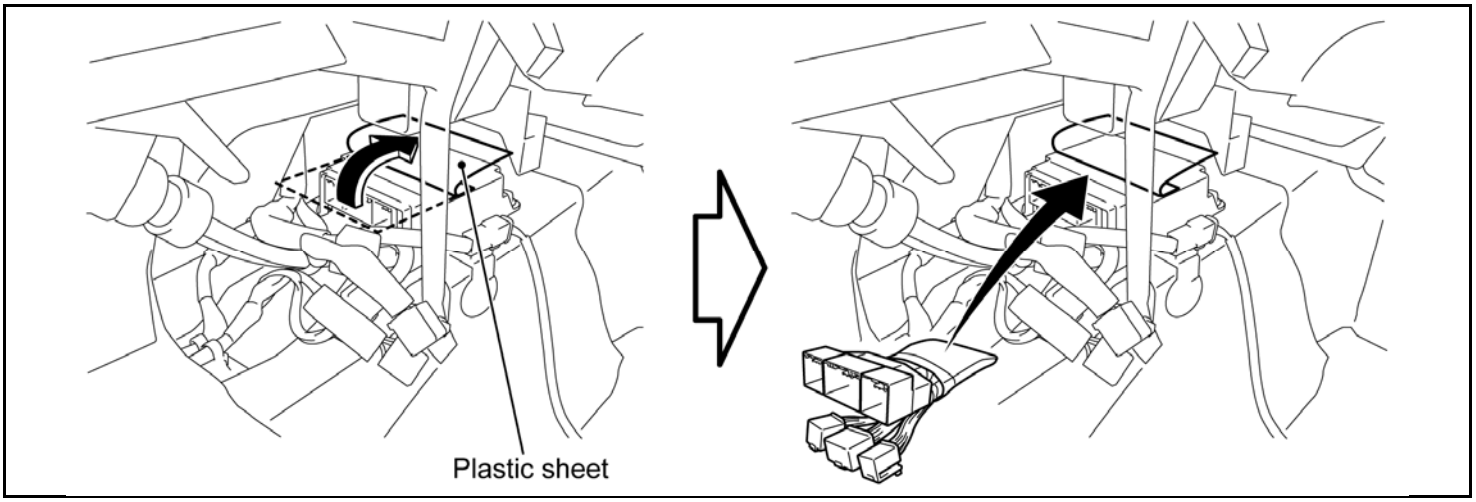

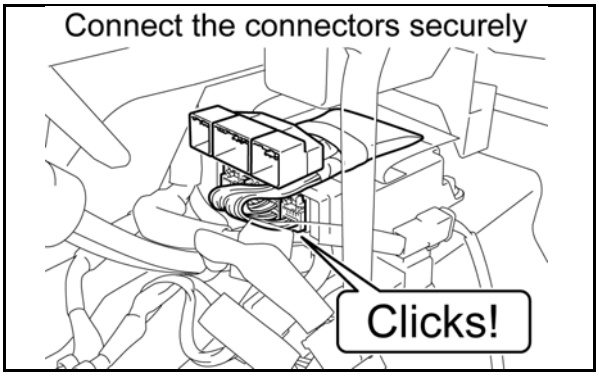

14. CONNECT THE SUB HARNESS

a) Connect the 3 ***NEW*** connectors to the airbag sensor.

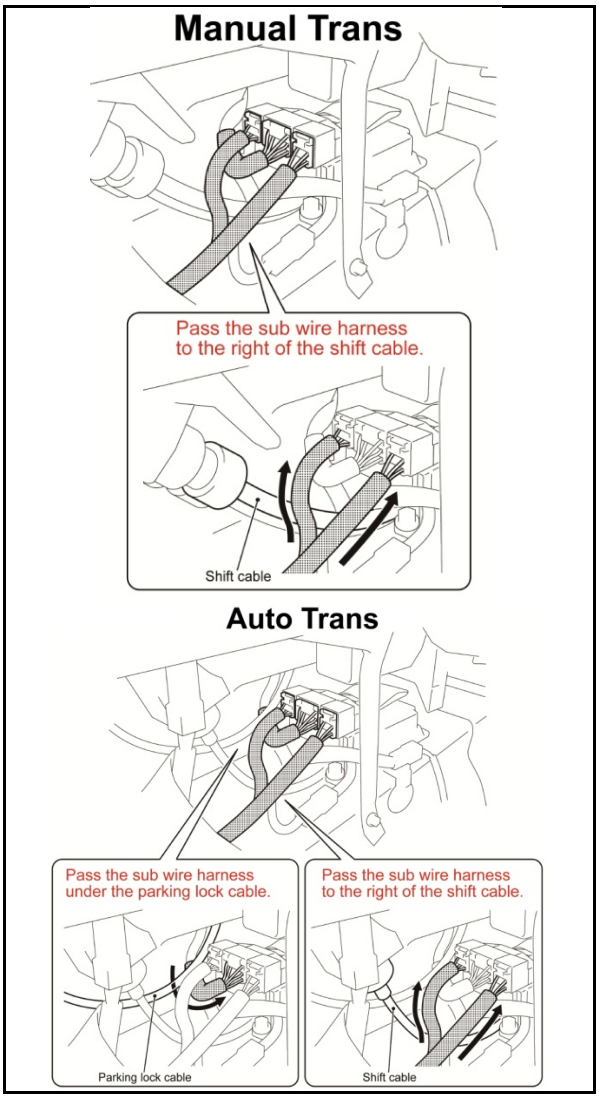

b) Connect the 3 vehicle-side connectors to the ***NEW*** sub harness. Reference the correct illustration based on transmission type for wire routing.

15. INSTALL THE WATER GUARD SHEET

a) Position the water guard sheet over the airbag sensor and sub harness.

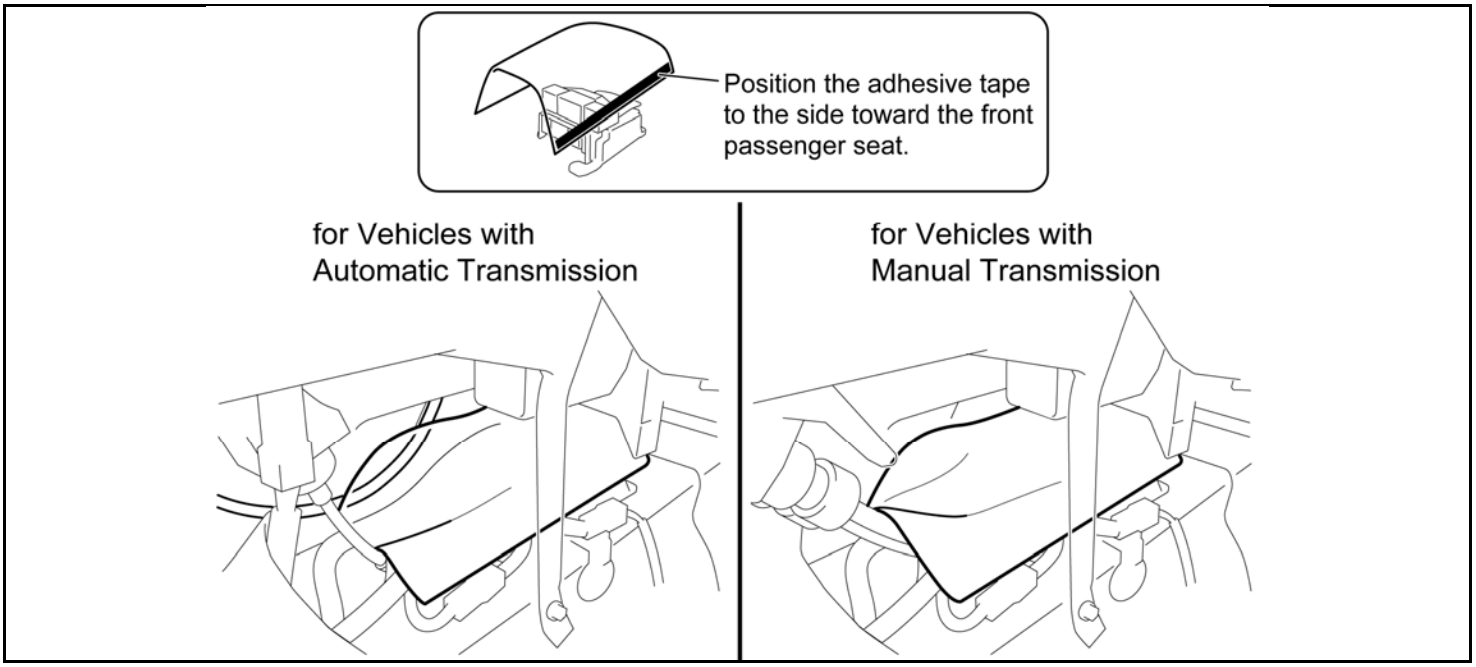

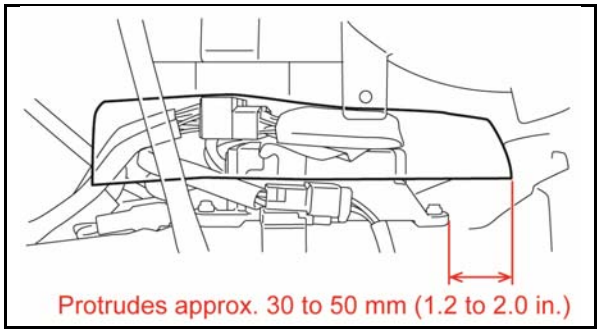

b) Position the sheet so that the edge protrudes 1.2 to 2.0 in. (30 to 50 mm) past the back side of the airbag sensor.

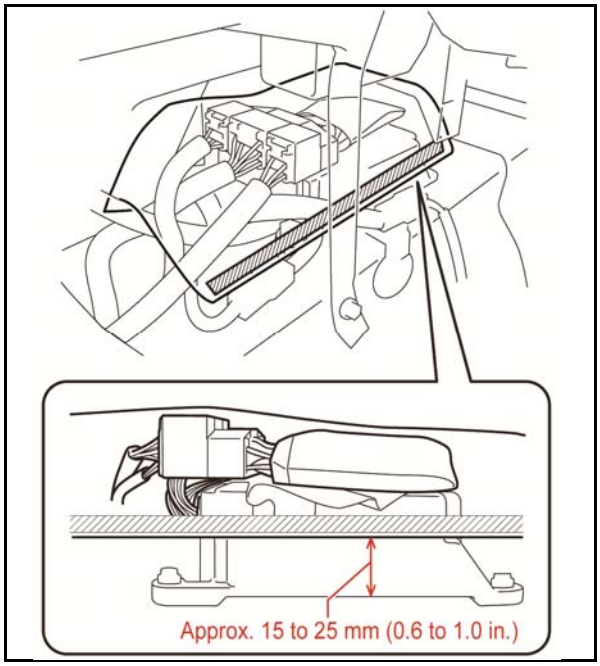

c) Adhere the tape on the sheet to the right side of the airbag sensor approximately 0.6 to 1.0 in. (15 to 25 mm) above the bottom end of the sensor.

d) Confirm the sheet has been positioned correctly.

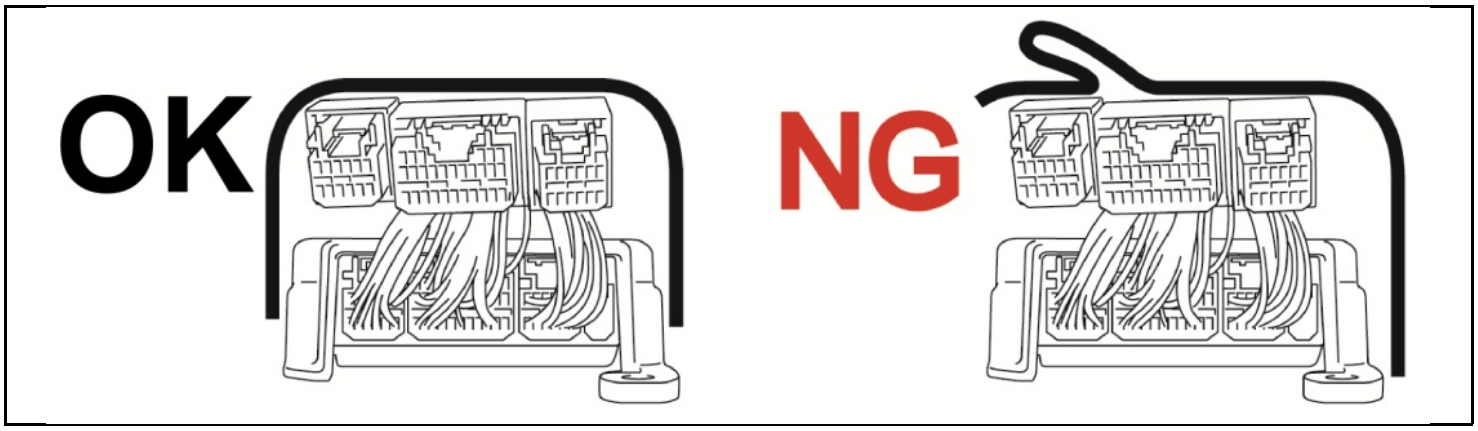

e) Pass a cable tie through the space under the airbag sensor, then connect another cable tie.

NOTE:

- **Only 2 cable ties are needed for the repair, 2 extra ties are also provided as supplements.**
- **If it is difficult to pass the cable underneath the airbag sensor, loosen the 3 bolts that fasten the sensor. Torque: 13ft. lbf (17.5N·m)**

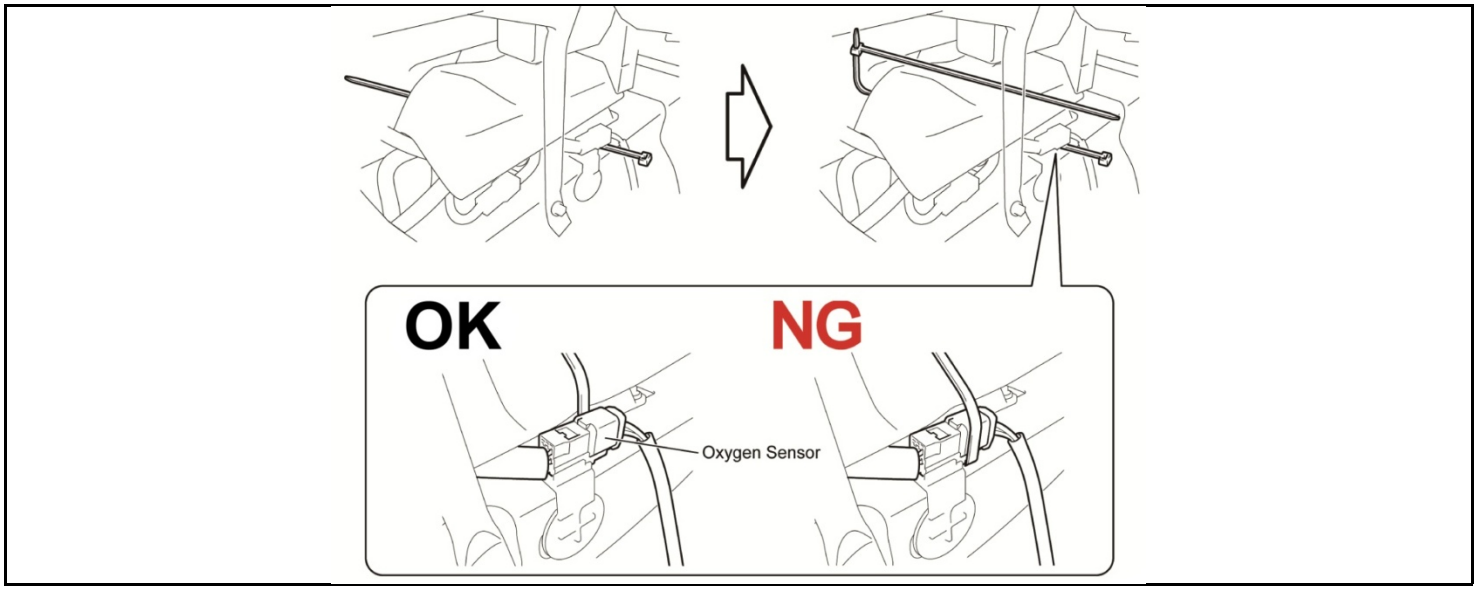

f) Join the cable ties and secure the sub harness, water guard, and airbag sensor together.

g) Cut any excess lengh from the cable tie.

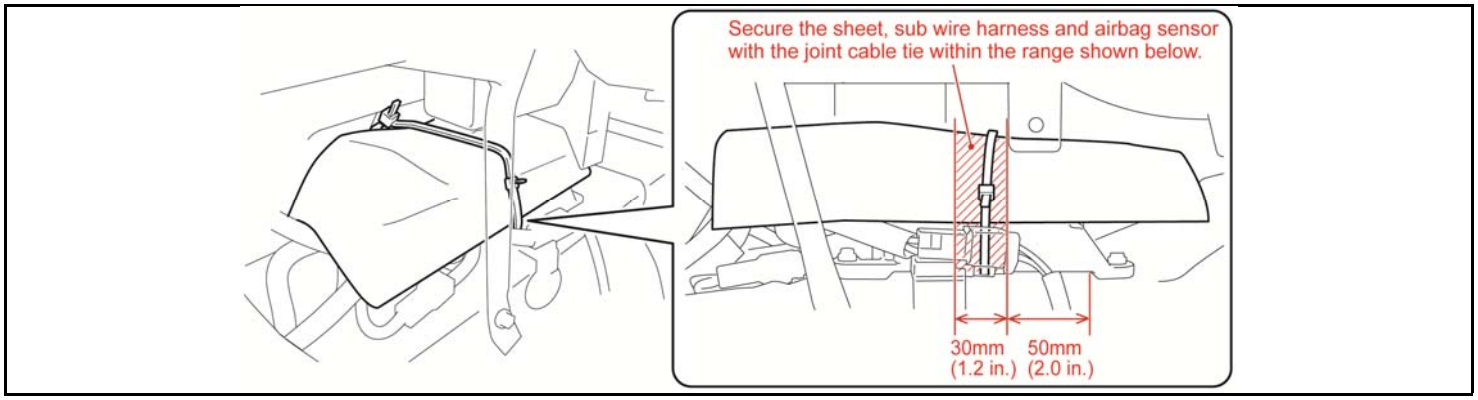

STOP

- **The water guard sheet is critical to prevent water from the air conditionerfrom dripping on the airbag sensor, confirm it is positioned and adhered correctly.**
- ***DO NOT* bind the oxygen sensor harness/connector with the cable ties.**
- **If the cable tie or sheet is affixed incorrectly, the sub harness may not be fixed properly.**

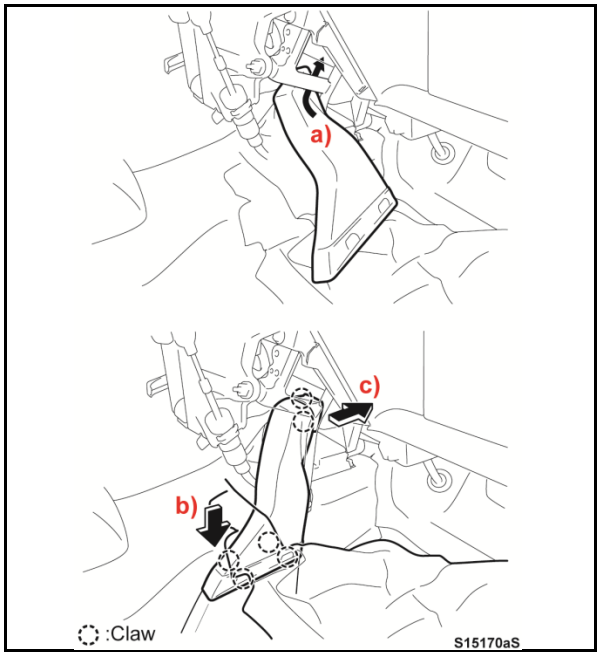

16. REINSTALL AIR DUCT REAR No. 3

a) Insert the upper portion of the duct inside the bracket.

b) Engage the 4 claws on the lower portion of the duct.

c) Engage the 2 claws on the upper portion of the duct.

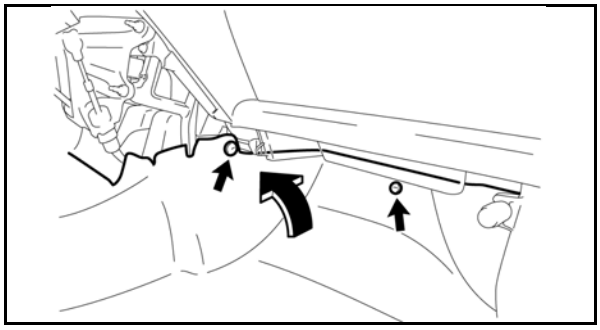

17. REINSTALL THE FLOOR CARPET RH

a) Reposition the carpet and engage the 2 clips

STOP **Confirm the floor carpet is secure and the clip is not damaged. Failure to secure the carpet could result in pedal interference.**

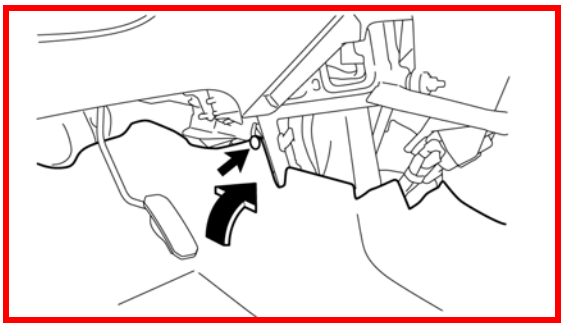

18. REINSTALL THE FLOOR CARPET LH

a) Reposition the carpet and engage the clip.

b) Fasten the Velcro fastener.

19. INSTALL THE FOLLOWING

a) Instrument panel finish panel lower center.

b) Instrument panel box.

c) Instrument cluster finish panel No. 1.

d) Heater control knob.

e) Shift lever knob sub-assembly ***(manual trans only).***

f) Instrument cluster finish panel sub-assembly center.

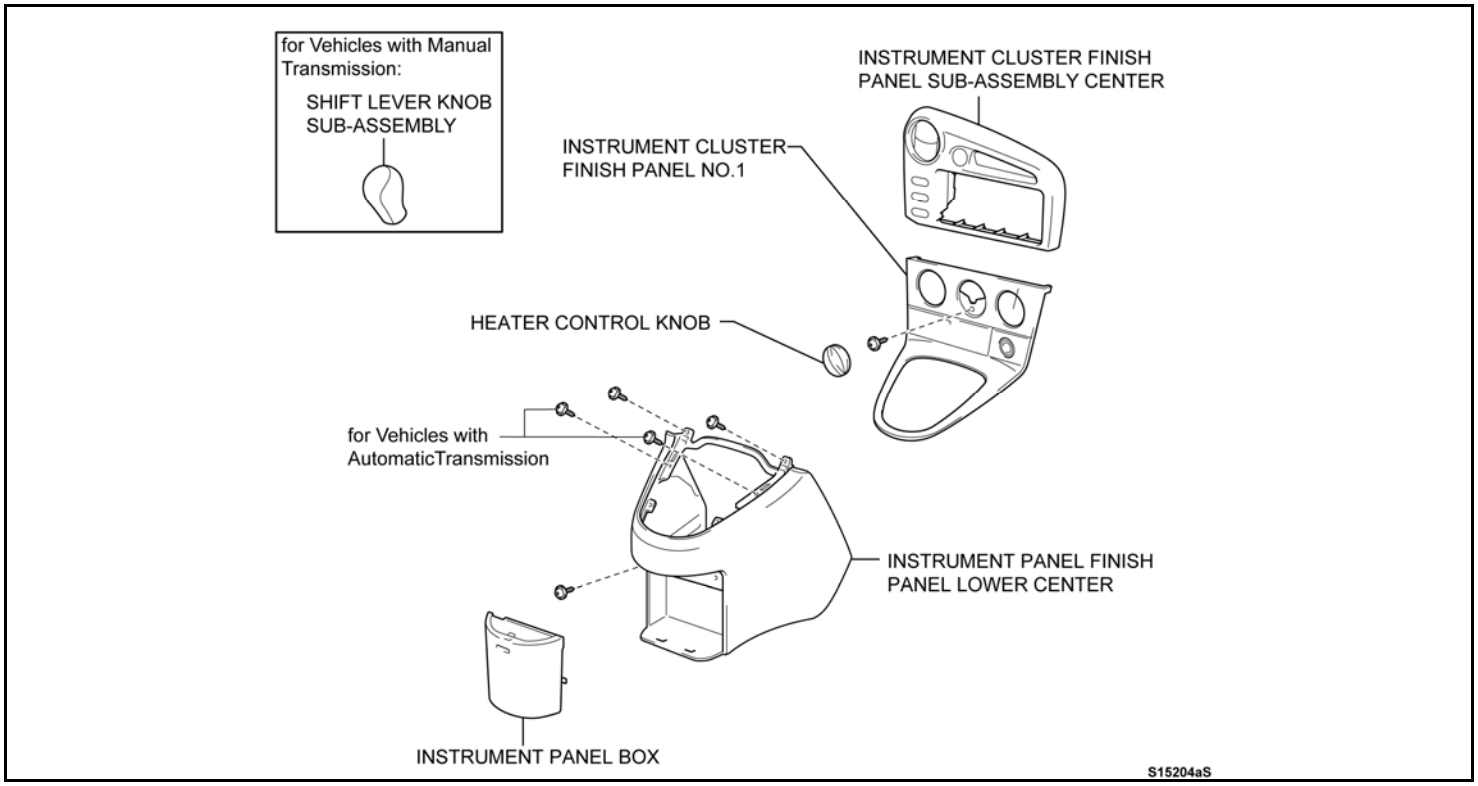

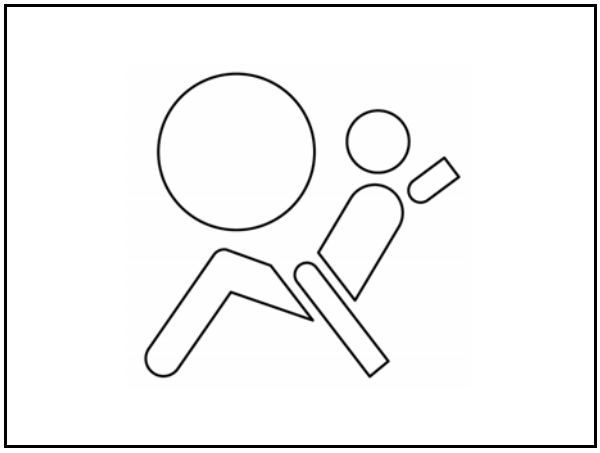

20. RECONNECT THE NEGATIVE BATTERY TERMINAL

21. CHECK THE AIRBAG WARNING INDICATOR

a) Check that the warning indicator illuminates when the ignition is switched on.

b) Confirm that the warning light will go off after about 6 seconds have elapsed after IG on.

STOP

- **After the 6 second illumination of the warning indicator, if the indicator goes off then back on or remains on, check for DTCs.**
- **Consult with the customer to determine if they would like to diagnose/repair any remaining concerns.**

22. RESTORE VEHICLE SETTINGS

a) Restore any memory settings.

b) Return the seats to their original positions.

◄ VERIFY REPAIR QUALITY ►

- **Confirm any DTCs prior to beginning this repair**
- **Read all precautions as outlined on TIS before servicing the SRS system**
- **Confirm *ALL* harness connectors are connected securely**
- **Confirm the water guard sheet is secured and positioned correctly**
- **Confirm the sub harness is secured correctly on top of the airbag sensor**
- **Confirm there are no DTCs when the repair is complete**

If you have any questions regarding this update, please contact your area representative.

VII. APPENDIX

A. CAMPAIGN DESIGNATION DECODER

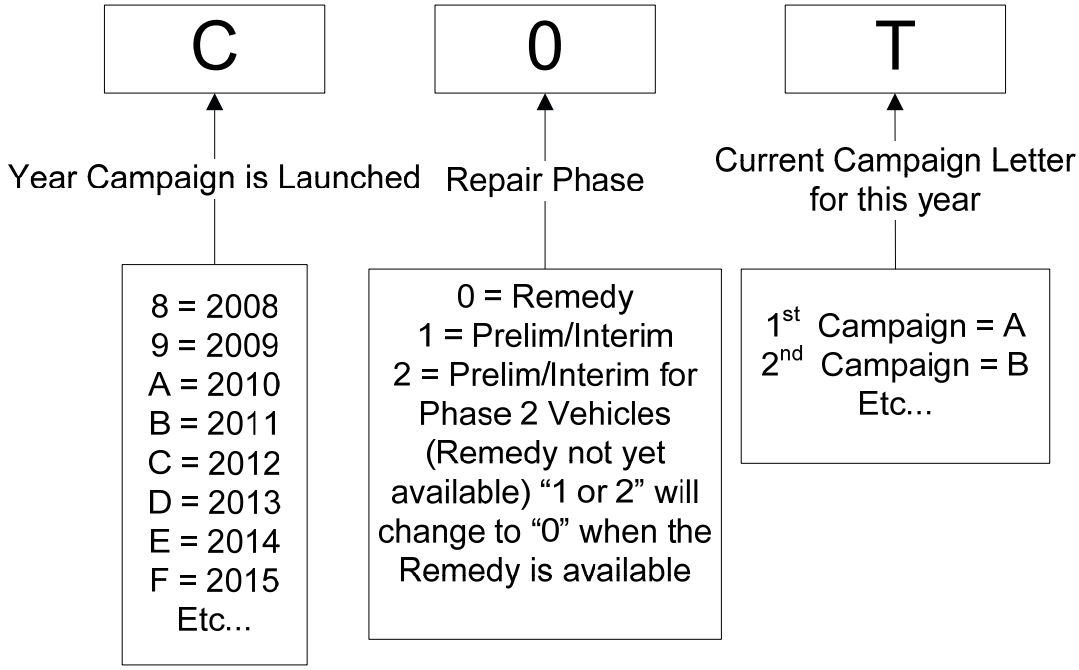

B. CAMPAIGN PARTS DISPOSAL

As required by Federal Regulations, please make sure all campaign parts (original parts) removed from the vehicle are disposed of in a manner in which they will not be reused, ***unless requested for parts recovery return.***