Retail Operator General Manager	Sales New Motorcycles	Sales Pre-Owned Motorcycles	Business Manager (F&I)	Service	Parts & Accessories	Administration
Date: June 2012 Bulletin # 11 002 12 (008)**R2**		Source: SI 05/2012 Name: Shawn McLean Title: Service & Technical Manager Phone: 201-307-4131			**Revised July 2012**	

BMW Motorrad USA
Service Information Bulletin

Notice of recall 12V-177

Subject: **Installing New Connecting Rod Bolts with Thread-Locking Compound**

Model: S 1000 RR (K46/11)

Details: Within the framework of quality monitoring, BMW Motorrad has ascertained there have been isolated cases of engine damage occurring at high engine rpm caused by connecting rod bolts working loose. In the event of engine damage, the occurrence of critical riding situations due to escaping oil or engine seizure cannot be precluded.

Motorcycles affected: In order to determine if a specific motorcycle is affected by this Recall Campaign, it will be necessary to verify all motorcycle VINs through a DCS Vehicle History Check. Based on the response of the system, either proceed with the repair or take no further action. Please note, affected VINs may not appear until 24-72 hours after the release of this bulletin.

NHTSA Statement: PERFORM THE PROCEDURE OUTLINED IN THIS SERVICE INFORMATION ON ALL AFFECTED VEHICLES BEFORE CUSTOMER DELIVERY OR THE NEXT TIME THE VEHICLE IS IN THE SHOP FOR MAINTENANCE OR REPAIRS.

BMW Motorcycle dealers must ensure recalls are completed after having been notified by BMW of North America, LLC (BMW Motorrad USA) that a safety-related defect or noncompliance exists in any motor vehicle or item of replacement equipment in the dealer's possession at the time of notification. In BMW NA's case, this notification would typically be made by the issuance of a recall notification in the form of a Service Information Bulletin (SIB) or transmission of a Dealer Communication System (DCS) recall message.

Under the National Traffic and Motor Vehicle Safety Act of 1966, as amended, if a recall campaign is announced by BMW NA, dealers must ensure that all recalls on motorcycles and new items of replacement equipment are completed BEFORE delivery to the consumer. This means that dealers may not legally deliver new motorcycles or new items of replacement equipment to consumers with an open recall.

The Safety Act also prohibits dealers from selling or leasing the motorcycles or item of replacement equipment, unless and until the open recall has been completed BEFORE delivery. This also pertains to motorcycles in the Certified Pre-Owned program, and to items of replacement equipment.

Finally, BMW motorcycle dealers should not sell or use parts that have been recalled by BMW Motorrad USA. Please follow the specific instructions provided by BMW Motorrad USA on the return or disposition of the parts.

Production Solution: As of April 10 2012, in series production, the connecting rod bolts have been installed with thread-locking compound applied to the threads. From VIN ZL16475 (K46/11) onward, motorcycles can be handed over to customers without the necessity for conversion.

All model year 2012 S 1000 RR motorcycles received from the US BMW warehouse after June 1, 2012 are not affected by this campaign.

Aftersales Solution: On all the motorcycles affected by this problem, the connecting rod bolts have to be replaced and the replacements installed with thread-locking compound applied. Make sure you have read and complied with the procedure in the accompanying work item 00 60 656 before handing over affected motorcycles to the customers.

© 2012, BMW of North America, LLC.
The contents of this document are confidential and should not be shared with third parties for distribution.

Warranty: The repair described in this bulletin is covered under warranty regardless of time or mileage. Reimbursement for this Recall Campaign is through normal claim entry utilizing the following information:

Warranty Processing Information:

Defect code: 00 00 11 20 00 — Installing new conrod bolts with thread-locking compound.

Labor codes:

1) 11 00 050* — Removing/installing engine, 47 FRU

or

+11 00 541 — Removing/installing engine, 46 FRU

*Main Work: Use this labor operation number when it is the main repair when performed along with other repairs at the time. If this is not the main repair, use the supplied plus code. Under **no** circumstances are you to claim both the main and plus code labor operations listed above.

and

2) 00 60 656 — Installing new conrod bolts with thread-locking compound (engine removed), 35 FRU

3) **00 60 657** — **Extra tooling time for campaign, conrod bolts, 10 FRU**

4) 46 52 510 — Installing and removing rear-wheel stand, 1 FRU

5) 61 00 503 — resetting/learning adaptation values, 2 FRU

6) 61 35 506 — restoring system time, 2 FRU

Part number: 11 24 2 333 689 — Recall 12V-177 Kit

or

See page 3 for individual part numbers

Claim either the 1 Kit part number or the individual part numbers listed on the following page, NOT both.

Sublet code: 4 — Engine oil, coolant, sealant, loctite 270 and wire ties. Not to exceed $48.

Please refer to the Warranty Policy and Procedures Manual regarding add-ons, proper support, documentation, claims submission and archiving requirements as applicable.

Contact: Service and Technical Manager

© 2012, BMW of North America, LLC.
The contents of this document are confidential and should not be shared with third parties for distribution.

Initial Parts Supply: For dealer convenience, a number of complete Recall 12V-177 Kits will be assembled and available for ordering through the normal parts channels. If the supply of the Recall 12V-177 Kits is depleted, individual parts (as shown below) may be ordered and claimed separately.

Contents of Recall 12V-177 Kit 11 24 2 333 689:	
11 11 7 717 355	1 x Seal
11 11 7 717 356	1 x Seal
11 41 7 805 370	1 x O-ring
11 14 7 724 485	30 x ISA screw (M6x35)
11 14 7 724 486	4 x ISA screw (M6x45)
11 13 7 676 132	7 x ISA screw
11 14 7 722 366	1 x O-ring
11 14 8 527 544	1 x Seal
11 41 8 528 449	1 x Seals set, coolant pump
11 41 7 721 991	2 x Screw
21 21 7 715 324	1 x Collared nut
18 21 7 717 848	4 x Sealing ring
46 54 7 694 305	3 x Raised pan-head screw M6x14 (ISA)
17 22 7 680 667	1 x O-ring
17 22 7 680 668	1 x O-ring
23 00 7 716 780	1 x Locking washer
23 41 7 728 108	1 x Raised-head screw
46 61 7 655 623	2 x Raised-head screw
07 11 9 906 941	2 x O-ring
07 11 9 963 252	1 x Sealing ring
11 24 8 536 250	8 x Conrod bolt
07 11 9 963 073	1 x Sealing ring
11 11 7 722 791	6 x Sealing washer
13 64 7 675 557	4 x O-ring
27 72 7 728 084	4 x Raised-head screw
07 11 9 906 969	1 x O-ring
Sublet code 4 supplies:	
	4T 5W-40 engine oil
	Coolant
	Wire ties
	Dow Corning sealant (07 58 0 397 777)
	High-strength thread-locking compound (Loctite 270) (83 19 2 210 337)

© 2012, BMW of North America, LLC.
The contents of this document are confidential and should not be shared with third parties for distribution.

Preparatory work: **Removing engine:**

For engine removal, refer to 11 00 050 Removing/installing engine in the latest RSD.

Work item: **00 60 656 Installing new conrod bolts with thread-locking compound (engine removed).**

Attention ! **Engine damage due to incorrect work routine!**

Review work item in its entirety prior to performing repairs.

It is essential to proceed in strict compliance with the routine set out in the accompanying work item. Pay attention to cleanliness when carrying out this repair.

Note: The top portion of the engine, valve cover, cylinder head, etc. are **NOT** disassembled.

For clarity, some drawings throughout this work item may show parts removed that are **NOT** removed for this repair.

Securing engine to engine-repair stand:

Secure engine holder (No. 11 0 701) to the engine with bushings and screws.

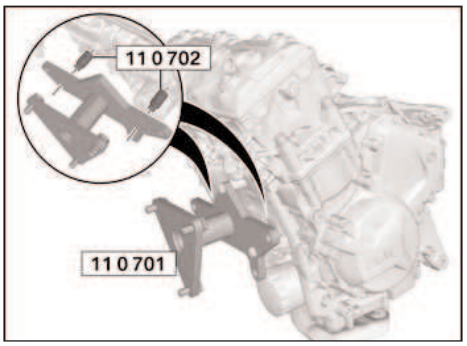

Position engine (1) with engine holder (No. 11 0 701) on engine-repair stand (No. 00 2 671) or suitable universal engine stand.

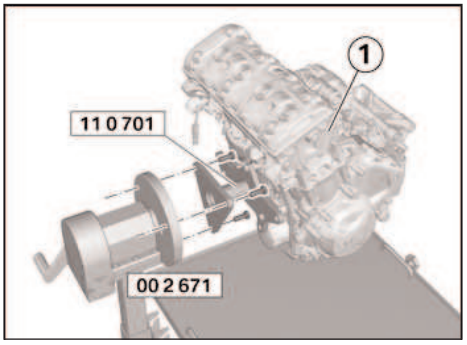

Removing direct ignition coils:

Clean the cylinder-head cover with compressed air prior to removal.
Remove direct ignition coil with puller (No. 12 3 621).

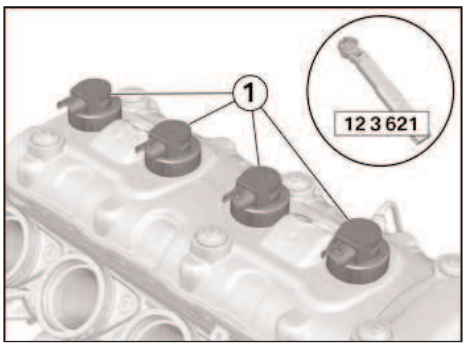

Removing spark plugs:

Clean the spark-plug recess with compressed air.
Remove spark plugs (1) with spark-plug wrench (No. 12 3 611).

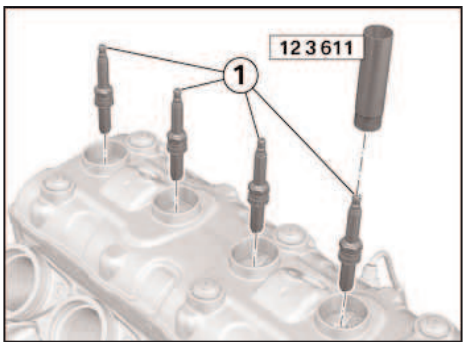

© 2012, BMW of North America, LLC.
The contents of this document are confidential and should not be shared with third parties for distribution.

Work item continued: **00 60 656 Installing new conrod bolts with thread-locking compound (engine removed).**

Disassembly continued:

Removing the screw from bore for locating pin:

Remove screw (1) with sealing ring (2).

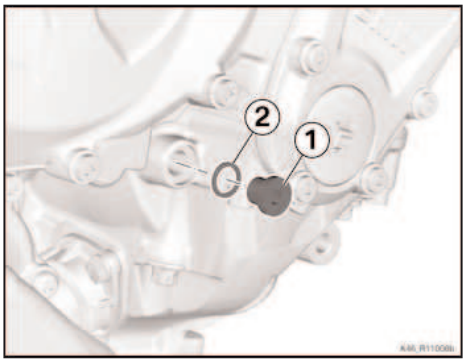

Removing crankshaft cover:

Remove crankshaft cover (1) with sealing ring (2).

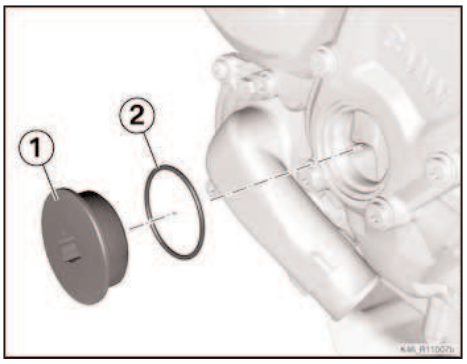

Setting engine to TDC:

Use the fastener of the timing-chain pinion to turn the crankshaft to TDC of cylinders 1 and 4.

Locking crankshaft in TDC position:

Turn crankshaft (1) until the marks on the sprockets (arrows) are facing each other and hole for locating screw (2) is visible.
Install locating screw (No. 11 0 771).

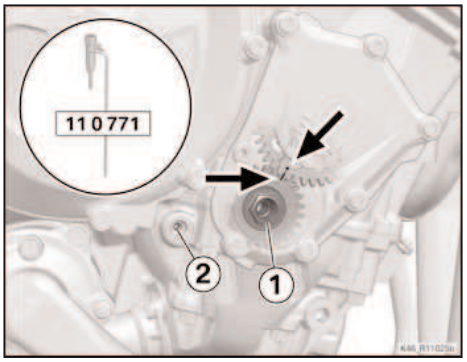

Removing timing-gear cover:

Remove screws (1) and remove timing-gear cover (2).

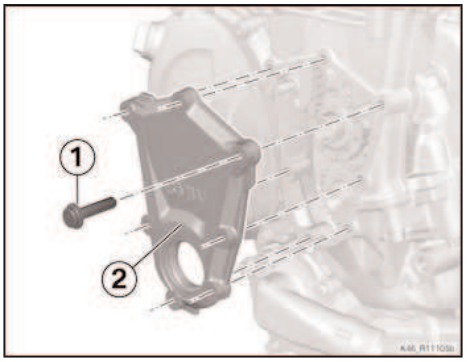

Removing right crankcase cover:

Remove screws (1).
Remove crankcase cover (2) and remove gasket (3).
Take note of cylindrical rollers (4).

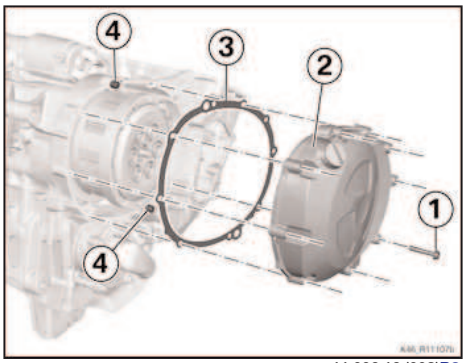

© 2012, BMW of North America, LLC.
The contents of this document are confidential and should not be shared with third parties for distribution.

Work item continued: **00 60 656 Installing new conrod bolts with thread-locking compound (engine removed).**

Disassembly continued:

Removing pressure plate:

Remove the following components:
Screws (1).
Spring retainers (2).
Springs (3).
Pressure plate (4).
Thrust piece (5).

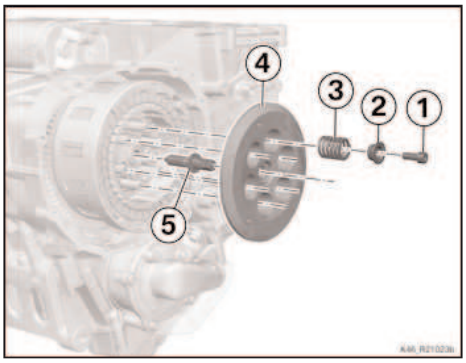

Hint: Only the first few clutch plates need to be removed to install the driver lock (21 4 603).

Removing driver:

Install driver lock (No. 21 4 603) in the driver and the clutch cage.
Disengage crimped lock (arrows).
Remove collared nut (1).
Remove release springs for ramp mechanism (2), (3) and (4).
Remove driver (5).

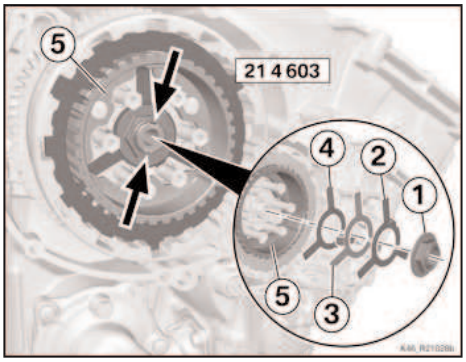

Removing clutch cage:

Remove the following components:
Washer (1).
Clutch cage (2).
Needle roller bearing (3).

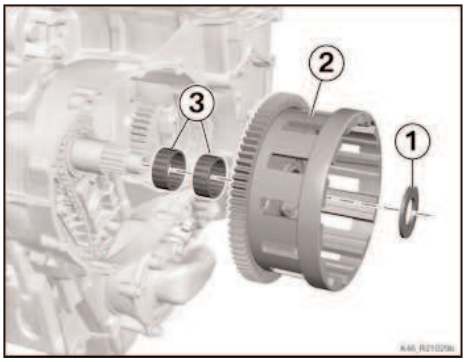

Note: Drawings throughout this work item may show parts removed that are NOT removed for this repair.

Removing coolant pump:

Remove screws (1), screws (2) and (3).
Remove coolant pump (4), noting O-rings (5) and (6).

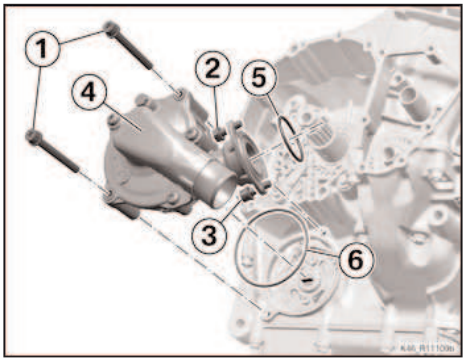

© 2012, BMW of North America, LLC.
The contents of this document are confidential and should not be shared with third parties for distribution.

Work item continued: **00 60 656 Installing new conrod bolts with thread-locking compound (engine removed).**

Disassembly continued:

Removing drive chain for oil pump:

Remove screws (1) and (2).
Remove chain guide (3).
Remove screws (4) and sprocket of oil pump (5).

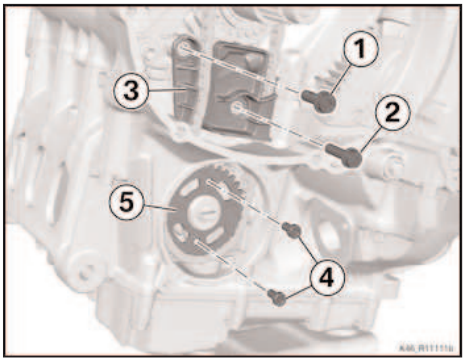

Remove drive chain (6), sprocket (7) and sleeve (8).

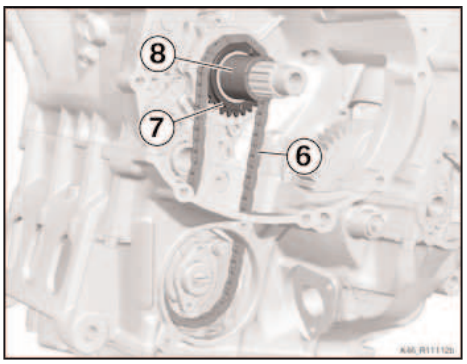

Remove the left crankcase cover:

Remove screws (1) and (2). Note dot/dash lines.
Remove housing cover (3).
Take note of cylindrical rollers (4).

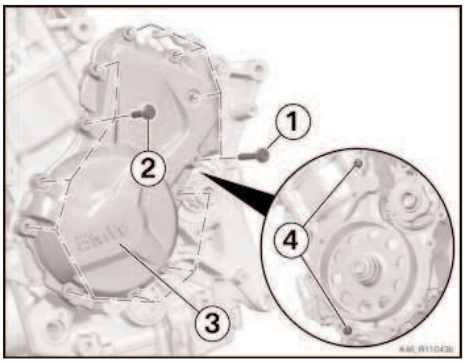

Removing TDC locating screw:

Remove locating screw (No. 11 0 771).

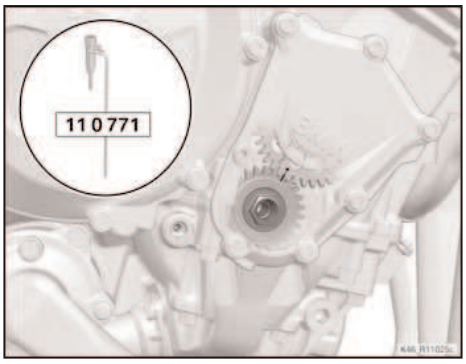

Attention ! **It is essential that the crankshaft is not turned even slightly out of position at any time during the entire procedure. Engine damage will result if the timing chain comes off the sprockets or by incorrect valve timing.**

© 2012, BMW of North America, LLC.
The contents of this document are confidential and should not be shared with third parties for distribution.

Work item continued: **00 60 656 Installing new conrod bolts with thread-locking compound (engine removed).**

Disassembly continued:

Removing oil pan:

Engine position: upside down on engine stand
Remove screws (1).
Remove oil pan (2).

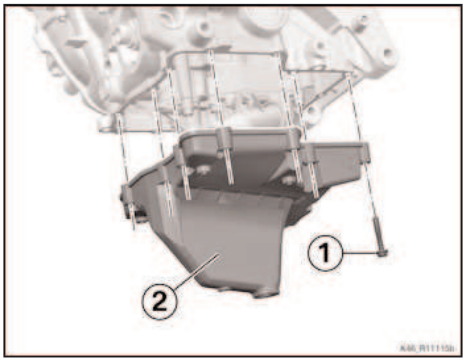

Removing oil-intake adapter:

Remove screw (1).
Remove oil-intake adapter (2) with O-ring (3).

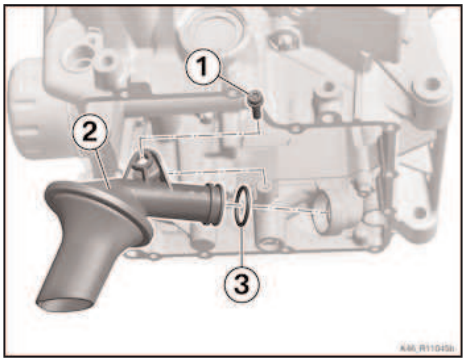

Slackening screws in engine block:

Slacken the screws in **reverse** sequence from (30) to (24).

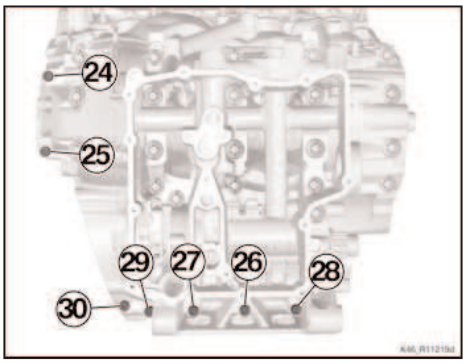

Slacken the screws in **reverse** sequence from (23) to (13).

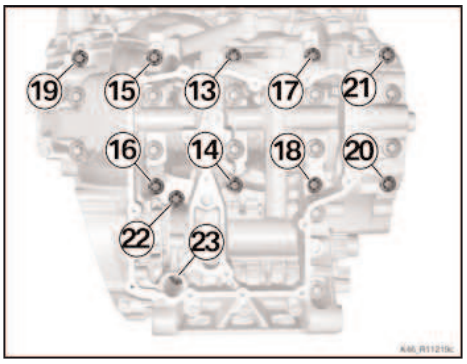

© 2012, BMW of North America, LLC.
The contents of this document are confidential and should not be shared with third parties for distribution.

Work item continued: **00 60 656 Installing new conrod bolts with thread-locking compound (engine removed).**

Disassembly continued:

Slacken the screws in **reverse** sequence from (12) to (1).

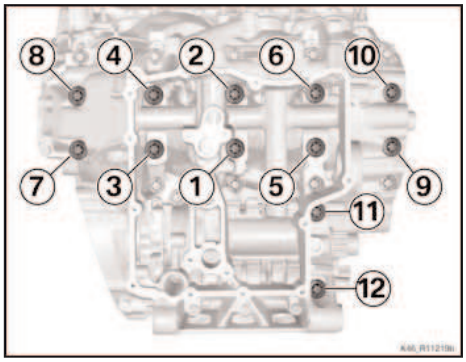

Removing screws from engine block:

Remove the engine-block securing screws in the sequence indicated:
Screw (1).
Screws (2).
Screws (3).
Screws (4).
Screws (5).
Screws with washers (6).

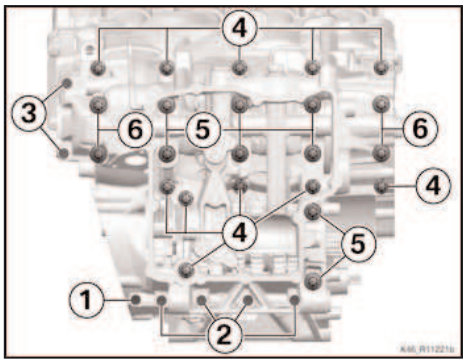

Remove bottom half of engine block (5).

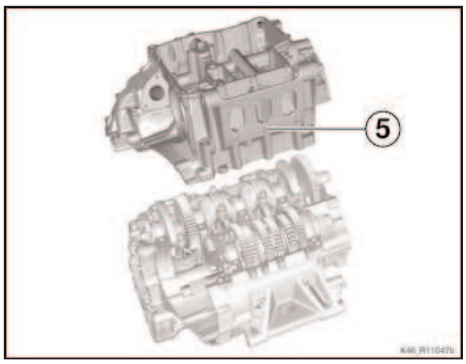

Attention ! **It is essential that the crankshaft and crankcase are not turned even slightly out of position at any time during the entire procedure. Engine damage will result if the timing chain comes off the sprockets or by incorrect valve timing.**

Remove sealing rings (6) and (7).
Take note of cylindrical rollers (8).

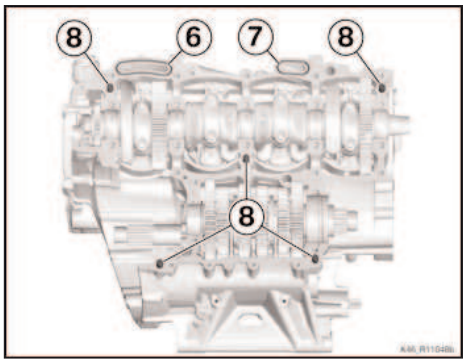

© 2012, BMW of North America, LLC.
The contents of this document are confidential and should not be shared with third parties for distribution.

Work item continued: **00 60 656 Installing new conrod bolts with thread-locking compound (engine removed).**

Disassembly continued:

Removing and disposing of old conrod bolts:

Remove conrod bolts (1) and dispose of them in an approved, environmental manner.
Take care that the conrods and pistons are not pushed away from the crankshaft.
DO NOT turn the crankshaft.

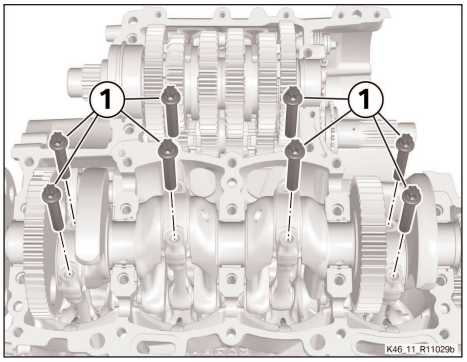

Hint: The conrod caps **DO NOT** need to be removed during this repair.

Pre-stretching new conrod bolts:

DO NOT apply thread locking compound at this time.

Install and tighten new conrod bolts (1) in pairs according to the specification using a torque wrench and angle torque tool.
After the final torque of 90° **remove** the new bolts.

Tightening torques	
Pre-stretching conrod bolt	
M8.5 x 1 Tighten the conrod bolts of each conrod alternately in accordance with the tightening sequence	Tightening sequence (per-conrod)
	Closing torque, 5 Nm
	Initial torque, 25 Nm
	Final torque, 90°

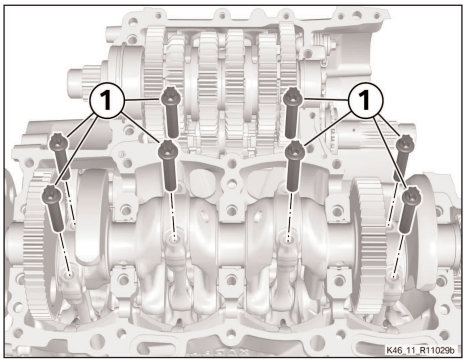

Cleaning new conrod bolts (removing corrosion inhibitor):

Clean the new conrod bolts by immersing them in brake cleaning fluid for at least 5 min.Then brush the bolts with a new brush, (e.g. tooth brush). Next remove residues with brake cleaning fluid and a cloth. Then blow dry with compressed air.

Inspect the surface of the bolts. They must be completely dull all over; this indicates that the corrosion inhibitor has been removed. If the surface of the bolts are not completely dull, repeat the cleaning procedure until the surface is completely dull.

© 2012, BMW of North America, LLC.
The contents of this document are confidential and should not be shared with third parties for distribution.

Cleaning conrod bolt holes:

Stuff paper towels (1) into the openings of the crankcase cavity and the cylinder bore to seal out brake cleaning fluid and thread-locking compound.

Make sure that conrods (2) with pistons are not pushed downward away from the crank shaft.

Clean threads (3) in conrods bolt holes (2) with brake cleaning fluid and a suitable nylon bristle brush (4).

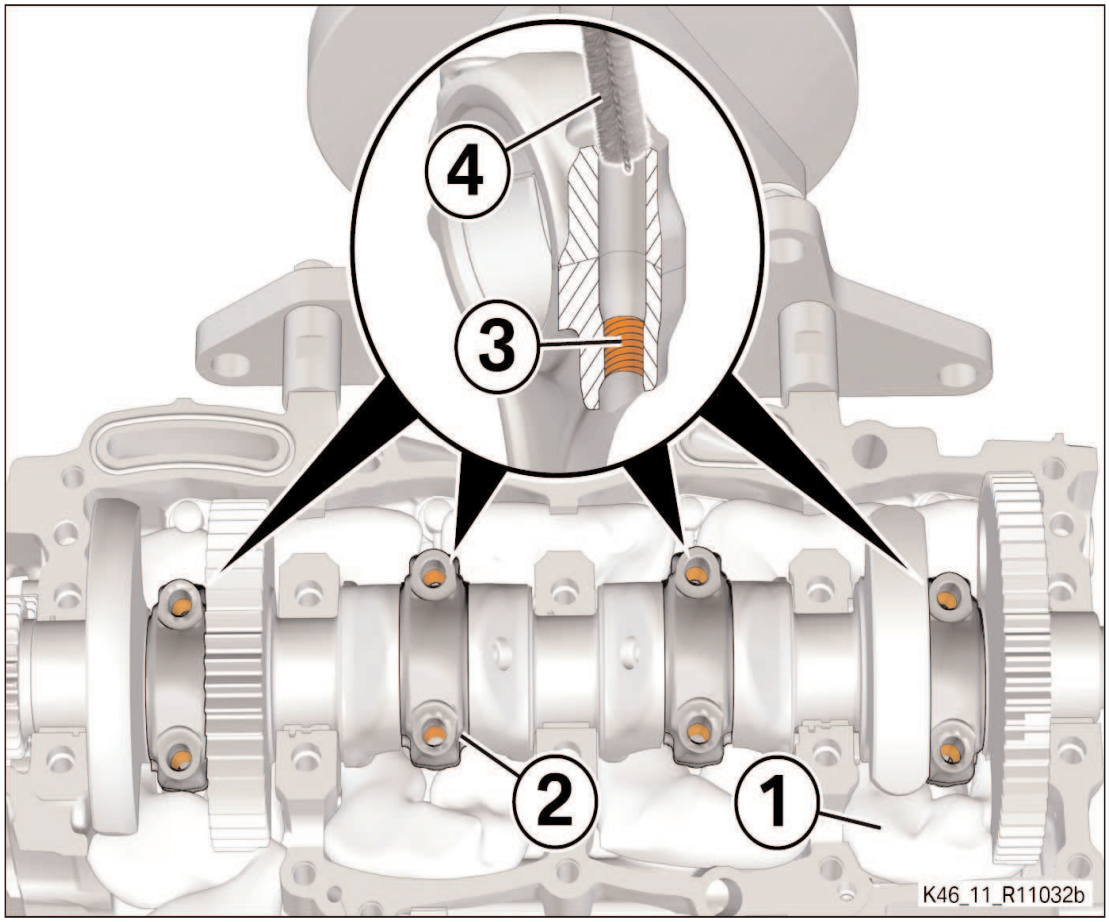

Installing new stretched conrod bolts:

Check that conrod bearing cap (1) and conrod have not slipped out of position; align if necessary.

It is essential to install the conrod bolts in pairs (for each conrod in turn).

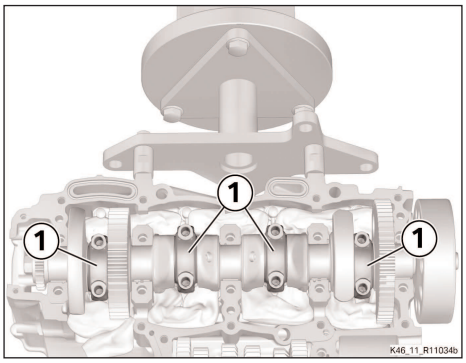

© 2012, BMW of North America, LLC.
The contents of this document are confidential and should not be shared with third parties for distribution.

Work item continued: **00 60 656 Installing new conrod bolts with thread-locking compound (engine removed).**

Attention: Thread-locking compound sets in approx.10 minutes. Apply the thread-locking compound just before installing and tightening a pair of bolts in the conrod bearing caps. Make sure that thread-locking compound is free of foreign matter.

Apply a strip of thread-locking compound (2) around the entire circumference over the first 9 threads of the pre-stretched conrod bolts (1).

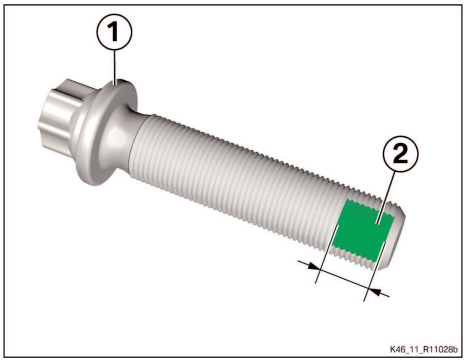

Fluids and lubricants	
High-strength thread-locking compound	
Loctite 270	83 19 2 210 337

Installing conrod bolts:

Insert pre-stretched conrod bolts (1) with thread locking compound applied in each con-rod and lubricate the mating faces (arrows) on conrod bearing cap (2) lightly with engine oil, using a suitable brush (3).

Then tighten the new conrod bolts (1) according to specification using a torque wrench and angle torque tool.

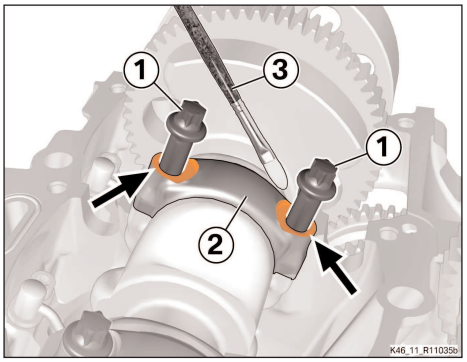

Attention Important Note: Final torque is **95°** for the pre-stretched conrod bolts**.**

Tightening torques	
Installing conrod bolt (thread-locking compound)	
M8.5 x 1 Tighten the conrod bolts of each conrod alternately in accordance with the tightening sequence	Tightening sequence (per-conrod)
	Closing torque, 5 Nm
	Initial torque, 25 Nm
	Final torque, **95°**

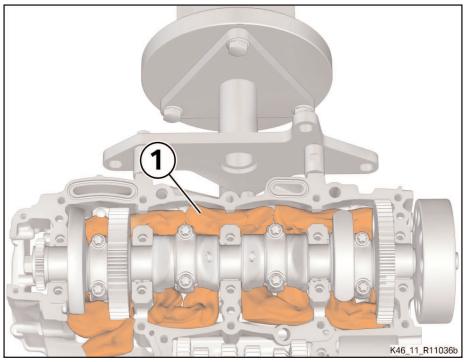

Remove paper towels (1) from crankcase cavity.

© 2012, BMW of North America, LLC.
The contents of this document are confidential and should not be shared with third parties for distribution.

Work item continued: **00 60 656 Installing new conrod bolts with thread-locking compound (engine removed).**

Reassembling Engine:

Attention: **Verify that the engine is still at TDC.**

Check that the alignment marks (arrows) are facing each other.

Installing bottom crankcase half:

Install new sealing rings (6) and (7).
Insure the cylindrical rollers (8) are installed.

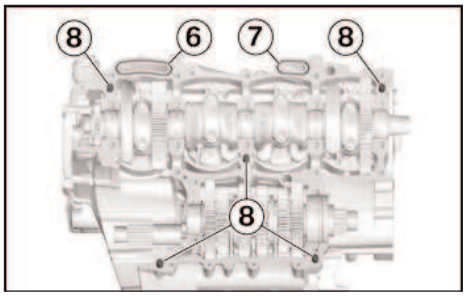

Sealant application to bottom half of engine block:

Apply a uniform, thin bead of sealing compound to the sealing faces of bottom half of engine block taking note the way in which the sealant bead (1) is applied.

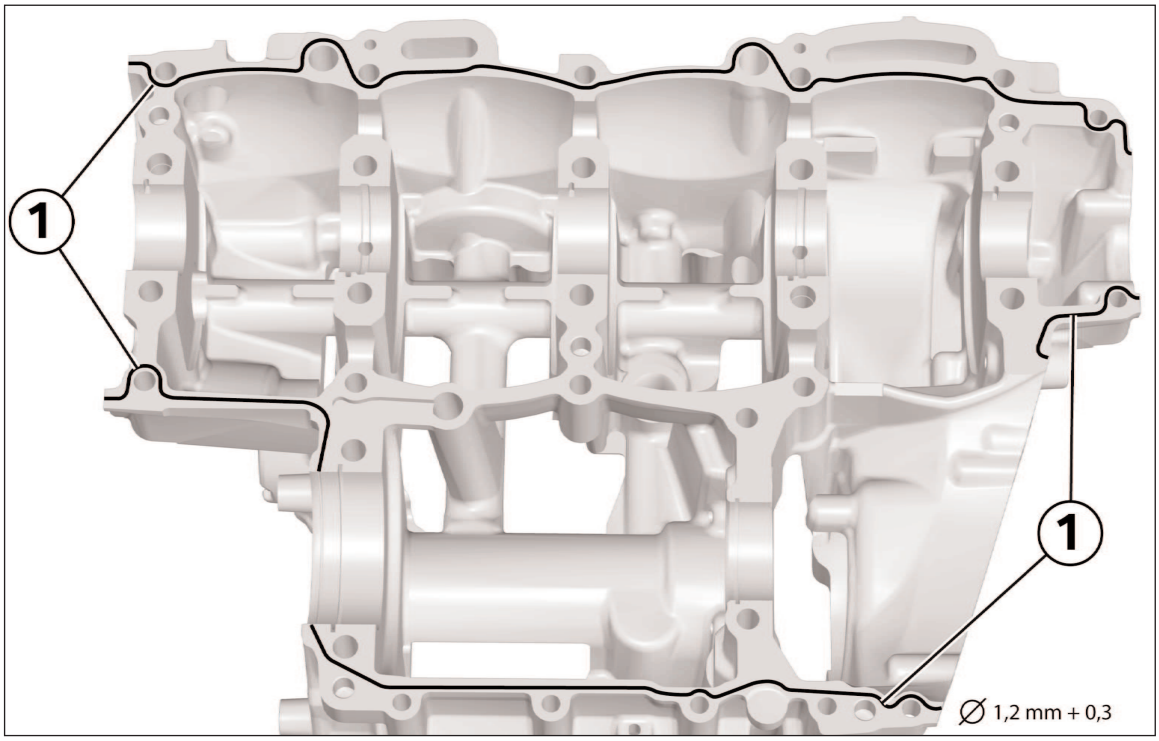

Fluids and lubricants	
Surface sealant	
Dow Corning sealant	07 58 0 397 777

Install bottom half of engine block (5). Make sure that sealing rings (6), (7) and shaft sealing ring (9) do not slip out of position and are not pinched.

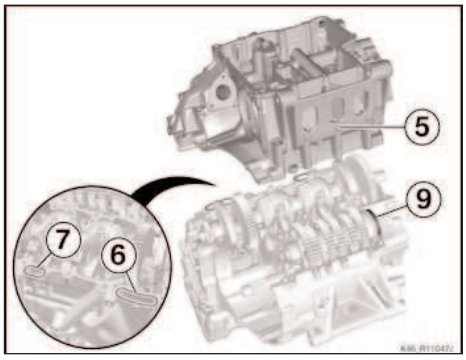

© 2012, BMW of North America, LLC.
The contents of this document are confidential and should not be shared with third parties for distribution.

Assembly continued:

Installing screws in engine block:

Working in the following sequence, hand-tighten the screws in the engine block, but do not fully tighten:
Screws with washers (6).
Screws (5).
Screws (4).
Screws (3).
Screws (2).
Screw (1).
Tighten the screws in the engine block to the following specifications.

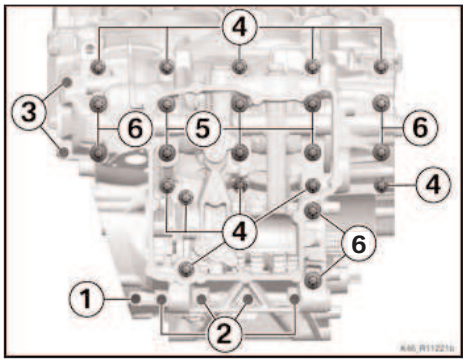

Tightening screws in engine block:

Tighten the screws in the specified sequence. 1 to 12.

Tightening torques	
Assembly of crankcase (main bearing)	
M9 x 95 not oiled	Tightening sequence
	Closing torque, 20 Nm
	Initial torque, 90°
	Final torque, 90°

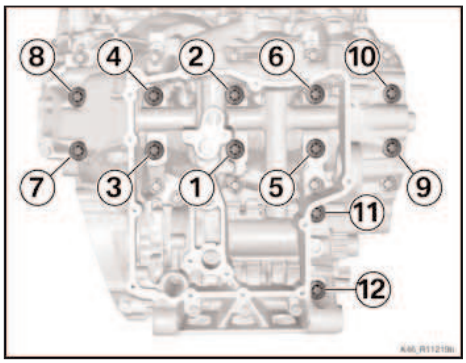

Tighten the screws in the specified sequence. 13 to 23.

Tightening torques	
Assembly of crankcase	
M8 x 57 not oiled	Tightening sequence
	Closing torque, 20 Nm
	Final torque, 90°

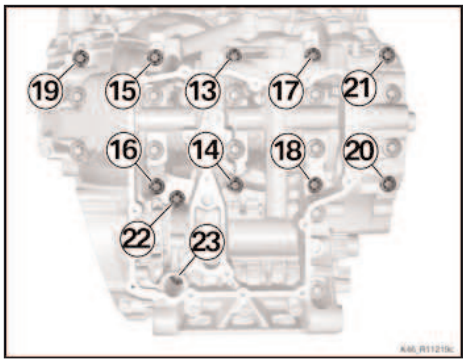

Tighten the screws in the specified sequence. 24 to 30.

Tightening torques	
Assembly of crankcase	
M6 not oiled	Tightening sequence
	9 Nm

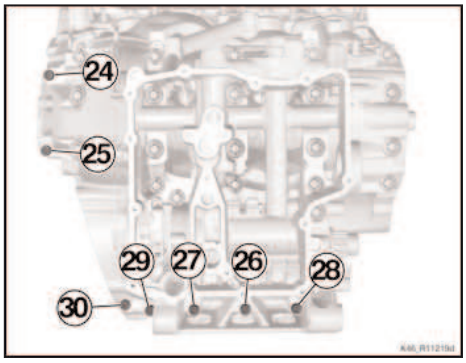

© 2012, BMW of North America, LLC.
The contents of this document are confidential and should not be shared with third parties for distribution.

Work item continued: **00 60 656 Installing new conrod bolts with thread-locking compound (engine removed).**

Assembly continued:

Installing oil-intake adapter:

Check O-ring (3); replace if necessary.
Install oil-intake adapter (2) with O-ring (3).
Install screw (1).

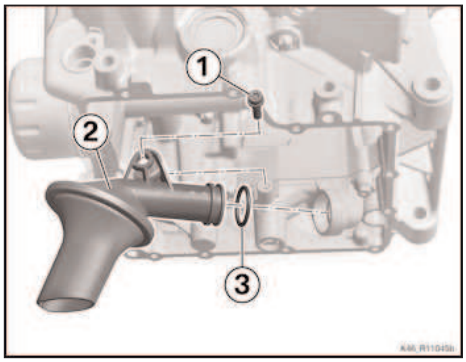

Tightening torques	
Oil intake pipe to crankcase	
M6 x 20	9 Nm

Installing oil pan:

Clean the sealing faces.
Apply a uniform bead of sealant to the sealing face of oil pan (2).

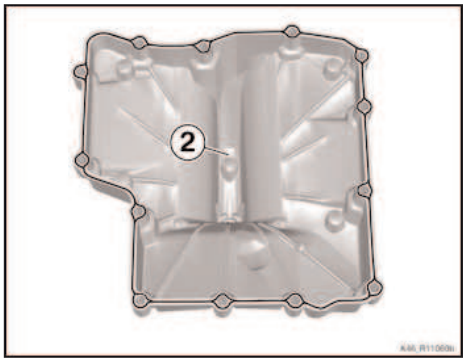

Fluids and lubricants	
Surface sealant	
Dow Corning sealant	07 58 0 397 777

Install oil pan (2).
Install new screws (1), but do not tighten.

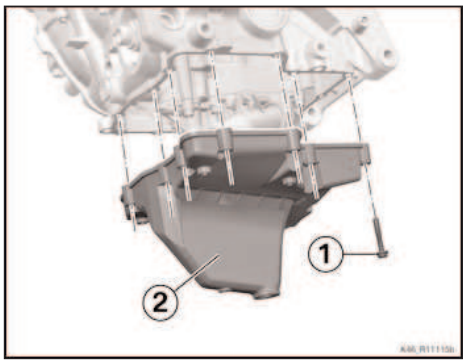

Tighten the screws in the specified sequence.

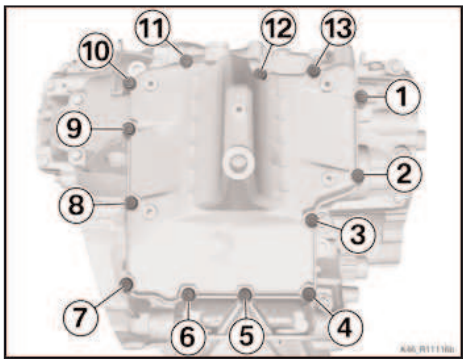

Tightening torques	
Oil pan to crankcase	
M6 x 35 Replace screw	Tightening sequence
	Initial torque, 3 Nm
	Final torque, 90°

© 2012, BMW of North America, LLC.
The contents of this document are confidential and should not be shared with third parties for distribution.

Work item continued: **00 60 656 Installing new conrod bolts with thread-locking compound (engine removed).**

Assembly continued:

Install the left crankcase cover:

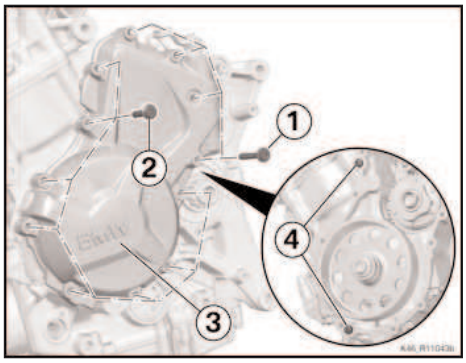

Clean the sealing faces.
Insure the cylindrical rollers (4) are installed.
Apply a thin bead of sealing compound to the sealing face of the engine block.
Install but do not tighten new long screws (1) and new short screws (2). Note dot/dash lines.

Fluids and lubricants	
Surface sealant	
Dow Corning sealant	07 58 0 397 777

Tighten screws (1) thru (12) in specified sequence.

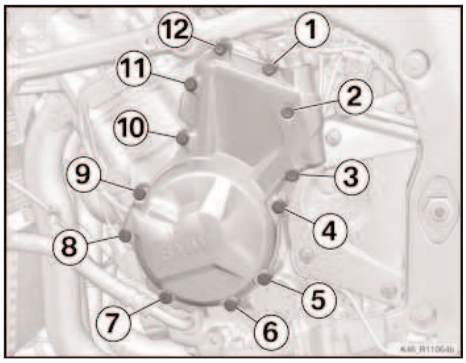

Tightening torques	
Engine cover, left, to crankcase	
M6 x 35 Replace screw	Initial torque, 3 Nm
	Final torque, 90°
M6 x 45, Replace screw	Initial torque, 3 Nm
	Final torque, 90°

Installing the drive chain for oil pump:

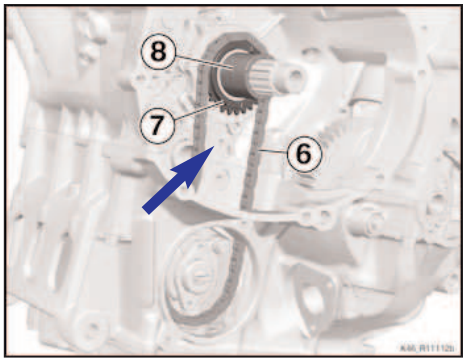

Install drive chain (6), sprocket (7) and sleeve (8).
Install O-Ring 07 11 9 906 969 on oil nozzle (arrow).

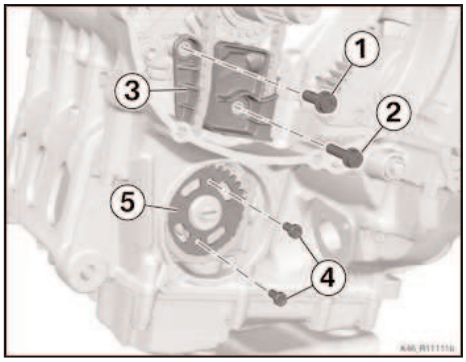

Clean the tapped holes. Install sprocket of oil pump (5).
Install new screws (4).

Tightening torques	
Oil-pump sprocket to oil pump	
M5 x 10, Replace screw Micro-encapsulated	6 Nm

Install chain guide (3).
Install screws (1) and (2).

Tightening torques	
Chain guide, oil pump to crankcase	
M6 x 25	9 Nm
M6 x 20	9 Nm

© 2012, BMW of North America, LLC.
The contents of this document are confidential and should not be shared with third parties for distribution.

Work item continued: **00 60 656 Installing new conrod bolts with thread-locking compound (engine removed).**

Assembly continued:

Installing coolant pump:

Check O-rings (5), (6) and (7) for damage; replace if necessary.
Slip O-ring (6) onto the coolant pump.
Install coolant pump (4), making sure that the drive engages (arrows).
Install screws (1), (2) and (3).

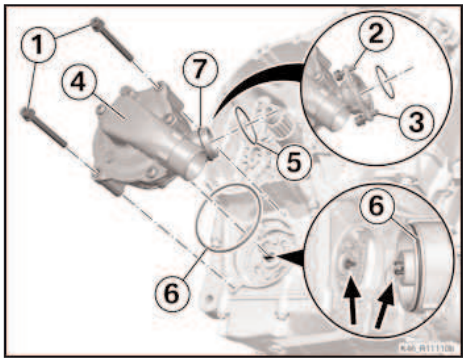

Tightening torques	
Coolant pump to crankcase	
M6 x 53	9 Nm
M6 x 20	9 Nm

Locking crankshaft in TDC position:

Verify the marks (arrows) on the crankshaft (1) and timing chain sprockets are facing each other.
The hole for locating screw (2) is visible.
Install locating screw (No. 11 0 771).

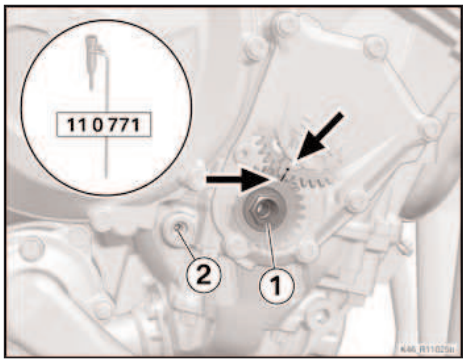

Installing clutch cage:

Lubricate needle roller bearing (3) with engine oil and install.
Install the clutch cage (2), making sure that the splines in the driver of the oil-pump mesh with the splines in the clutch cage (arrows).
Install washer (1).

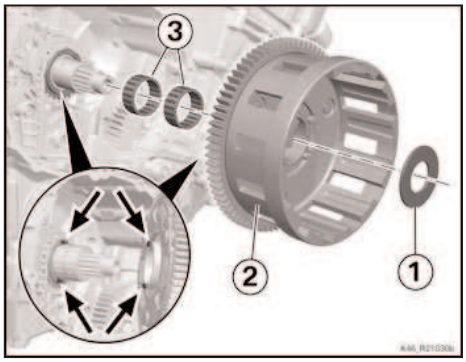

Checking clutch cage installation:

Test:

Check that the clutch primary gear (1) is installed so that it is recessed below the crankshaft gear (2) and that clutch cage (3) is flush with the bearing bushing (4).

Result:

If the primary gear of the clutch is not recessed below the crankshaft gear and clutch cage is not flush with the bearing bushing:

Measure:

Re-install the clutch cage, noting the teeth of the oil-pump drive.

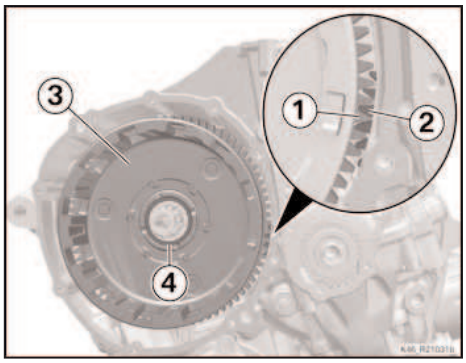

© 2012, BMW of North America, LLC.
The contents of this document are confidential and should not be shared with third parties for distribution.

Work item continued: **00 60 656 Installing new conrod bolts with thread-locking compound (engine removed).**

Assembly continued:

Installing driver:

Hold internal driver (5) in position. Make sure that ramp noses (6) engage ramp recesses (7).

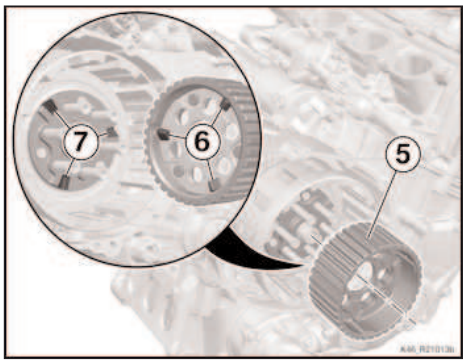

Install complete driver (5).
Install release springs for ramp mechanism (4), (3) and (2) offset 120 degrees from each other.
Install driver lock (No. 21 4 603) in the driver and the clutch cage.
Install new collared nut (1).

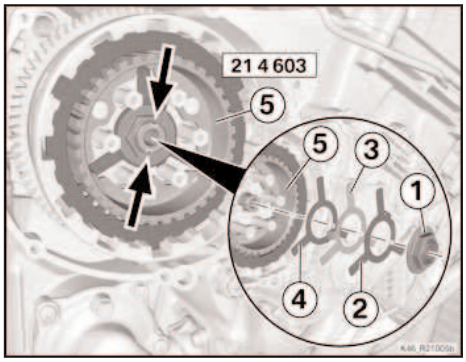

Tightening torques	
Clutch to gearbox input shaft	
M20 x 1.5, Replace nut Crimp-lock the nut with the shaft groove, Mechanical thread lock	150 Nm

Using suitable pliers, engage the crimped locks (arrows).

Install the pressure plate:

Install the following components:
Thrust piece (5).
Pressure plate (4).
Springs (3).
Spring retainers (2).
Lightly lubricate screws (1) and engage threads.

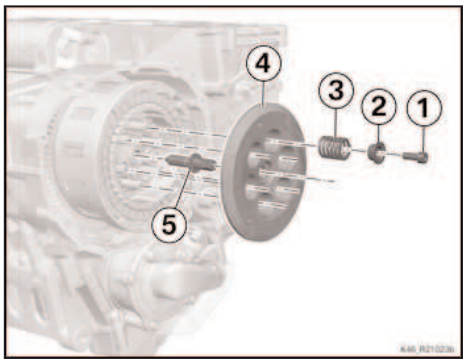

Install the screws as numbered in diagonally opposite sequence.
Working clockwise, tighten the screws to the specified torque.

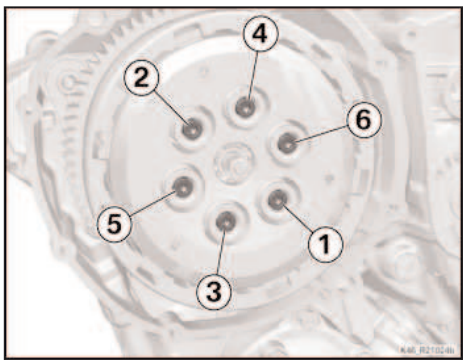

Tightening torques	
Pressure plate to driver	
M6 x 16 -10.9 Screws oiled	Install in diagonally opposite sequence, work clockwise to apply final torque
	10 Nm

© 2012, BMW of North America, LLC.
The contents of this document are confidential and should not be shared with third parties for distribution.

Work item continued: **00 60 656 Installing new conrod bolts with thread-locking compound (engine removed).**

Assembly continued:

Installing right crankcase cover:

Clean the sealing faces.
Insure the cylindrical rollers (4) are installed.
Place gasket (3) in position and install crankcase cover (2).
Install new screws (1) and tighten until hand-tight.

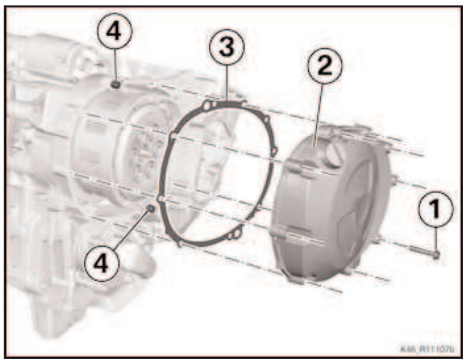

Tighten the screws with torque wrench (No. 00 2 703) in accordance with the specified tightening sequence.

Tightening torques	
Clutch cover to crankcase	
M6 x 35 Replace screw	Initial torque 3 Nm
	Final torque 90°

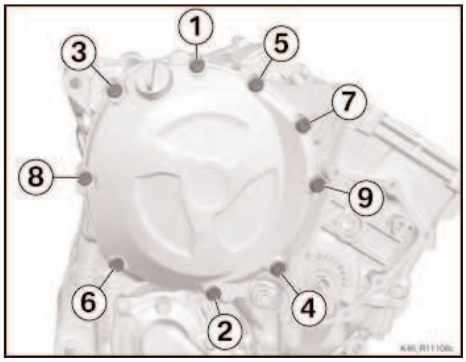

Removing TDC locating screw:

Remove locating screw (No. 11 0 771).

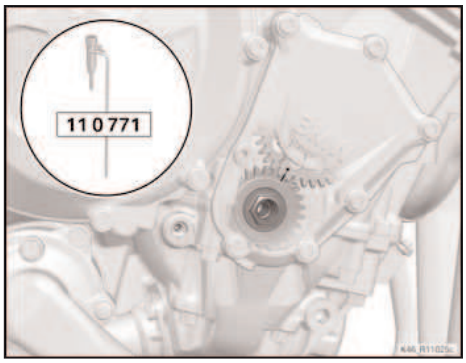

Installing timing-gear cover:

Clean the sealing face.
Apply a thin bead of sealing compound to the sealing face of the engine block.

Fluids and lubricants	
Surface sealant	
Dow Corning sealant	07 58 0 397 777

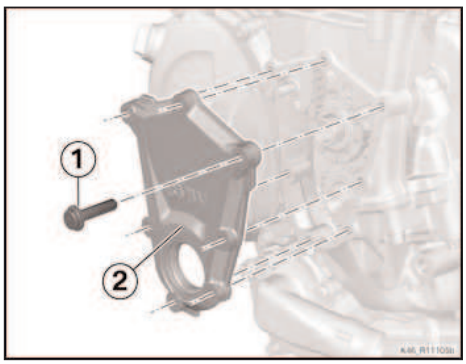

Hold timing-gear cover (2) in position and install new screws (1) and tighten until hand-tight.

© 2012, BMW of North America, LLC.
The contents of this document are confidential and should not be shared with third parties for distribution.

Work item continued: **00 60 656 Installing new conrod bolts with thread-locking compound (engine removed).**

Assembly continued:

Installing screw in bore for locating pin:

Install screw (1) with new sealing washer (2).

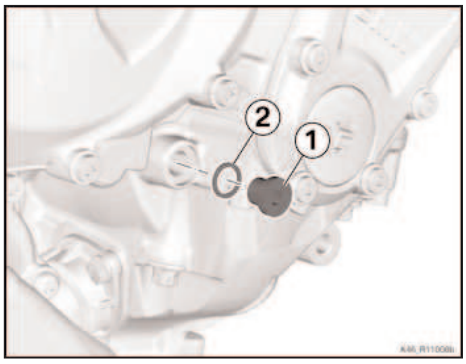

Tightening torques	
Threaded plug in crankcase (bore for locating pin)	
M10 x 1	15 Nm

Installing timing-gear cove:

Tighten the screws in the specified sequence.

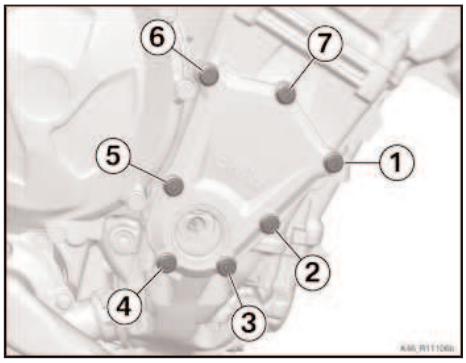

Tightening torques	
Cover, valve drive, to crankcase	
M6 x 25 Replace screw	Closing torque, 3 Nm
	Final torque, 90°

Installing crankshaft cover:

Install crankshaft cover (1) with new sealing ring (2).

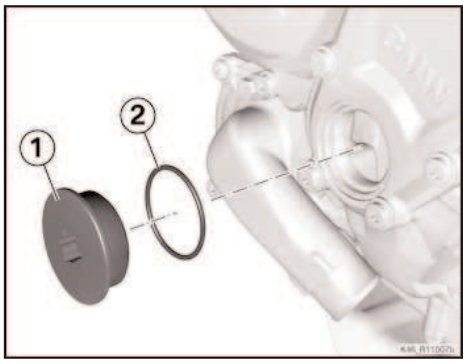

Tightening torques	
Threaded plug to timing-gear cover	
M32 x 2	10 Nm

Installing spark plugs:

Install spark plugs (1) with spark-plug wrench (No. 12 3 611).

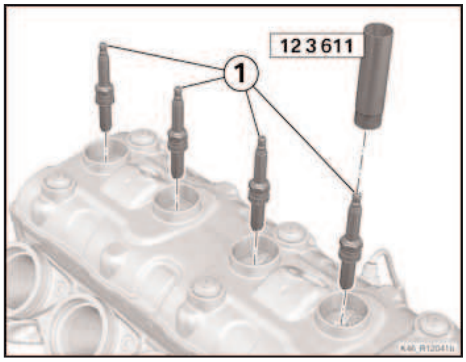

Tightening torques	
Spark plug to cylinder head	
M10 x 1	12 Nm

Installing direct ignition coil:

Introduce direct ignition coils into the spark-plug recess, seat it on the spark plug.

Finishing work: **Installing engine:**

Install engine per work item 11 00 050 Removing/installing engine.
Refer to latest RSD for engine installation.

Final check of work performed.

© 2012, BMW of North America, LLC.
The contents of this document are confidential and should not be shared with third parties for distribution.