Bulletin No.: 09047C
Date: March 2016

Recall Bulletin

PRODUCT SAFETY RECALL

SUBJECT: **Engine Compartment Fire**

MODELS: **1997-2003 Buick Regal**
2000-2003 Chevrolet Impala
1998-1999 Chevrolet Lumina
1998-2003 Chevrolet Monte Carlo
1998-1999 Oldsmobile Intrigue
1997-2003 Pontiac Grand Prix
Equipped with a 3.8L V6 Naturally Aspirated Engine (RPO L36 - VIN K)

The Warranty Transaction section and Service Procedure in this bulletin have been revised to provide service repair tips that may reduce the amount of time and effort required to perform the repair. In addition, beauty cover removal, retention, and disposal information is provided. Please discard all copies of bulletin 09047C.

It is a violation of Federal law for a dealer to deliver a new motor vehicle or any new or used item of motor vehicle equipment (including a tire) covered by this notification under a sale or lease until the defect or noncompliance is remedied.

All involved vehicles that are in dealer inventory must be held and not delivered to customers, dealer traded, or used for demonstration purposes until the repair contained in this bulletin has been performed on the vehicle.

CONDITION

General Motors has decided that a defect, which relates to motor vehicle safety, exists in certain 1997-2003 model year Buick Regal and Pontiac Grand Prix, 1998-1999 model year Chevrolet Lumina and Oldsmobile Intrigue, 1998-2003 model year Chevrolet Monte Carlo, and 2000-2003 model year Chevrolet Impala model vehicles, equipped with a 3.8L V6 naturally aspirated engine (RPO L36 – VIN K). Some of these vehicles have a condition in which drops of engine oil may be deposited on the exhaust manifold through hard braking. In rare cases, if this condition occurs, and if a hot surface ignition source were present, an engine compartment fire could occur.

CORRECTION

Dealers are to replace the engine's front valve cover and front-valve-cover gasket with new parts of an improved design. The engine's plastic "beauty" cover and plastic oil-fill-tube extension will be removed, if they have not been already.

Copyright 2015 General Motors. All Rights Reserved.

VEHICLES INVOLVED

All involved vehicles are identified by Vehicle Identification Number on the Investigate Vehicle History screen in GM Global Warranty Management system. Dealership service personnel should always check this site to confirm vehicle involvement prior to beginning any required inspections and/or repairs. It is important to routinely use this tool to verify eligibility because not all similar vehicles may be involved regardless of description or option content.

For dealers with involved vehicles, a listing with involved vehicles containing the complete vehicle identification number, customer name, and address information has been prepared and will be provided to US and Canadian dealers through the GM GlobalConnect Recall Reports. Dealers will not have a report available if they have no involved vehicles currently assigned.

The listing may contain customer names and addresses obtained from Motor Vehicle Registration Records. The use of such motor vehicle registration data for any purpose other than follow-up necessary to complete this recall is a violation of law in several states/provinces/countries. Accordingly, you are urged to limit the use of this report to the follow-up necessary to complete this recall.

PART INFORMATION

Parts required to complete this recall are to be obtained from General Motors Customer Care and Aftersales (GMCCA). Please refer to your “involved vehicles listing” before ordering parts. This part will be on Order Writing control initially and all DRO’s (Daily Replenishment Orders) will cancel. Dealers can place orders CSO (Customer Special Order). In emergency situations a dealer should place a SPAC case and the orders will be processed in the order received. **All orders will be reviewed prior to being filled.** Parts may have quantity limiters in effect.

Important: Due to limited initial parts availability, dealers are encouraged not to order recall parts for use as shelf stock.

Equipped with 3.8L V6 Naturally Aspirated Engine (RPO L36 – VIN K)

Part Number	Description	Quantity/Vehicle
88891792	Retainer, S Plug Wire (4-wire, 7mm)	1(If Required)
12132229	Retainer, S Plug Wire (2-Wire, 7mm)	1(If Required)
12590366	Valve Cover LH (Naturally Aspirated)	1
25532619	Gasket, Valve Rocker Arm Cover (Naturally Aspirated)	1
*	Oil Fill Cap O-Ring (If Required)	1(If Required)

*Not all vehicles will require an oil fill cap O-ring. Use the VIN, SI and the GM Electronic Parts Catalog to determine which part to order.

SERVICE PROCEDURE

The service procedure listed in this document varies from the procedure that is listed in SI for replacing the left or front engine valve cover. Below are a few tips to help with the procedure:

- Release the retaining tab from the evaporative emission (EVAP) canister purge mounting bracket and set the EVAP canister purge valve aside. It is not necessary to disconnect the EVAP hoses from the EVAP canister purge valve.
- Remove the spark plug wires from the ignition coil only. It is not necessary to remove them from the spark plugs. Damage to the spark plug wires could occur if they are removed from the spark plugs.
- When removing the left engine mount strut bracket, break the upper bolts loose using a boxed end wrench. Then use a ¼" drive ratchet, extension, and swivel socket to fully remove the bolts. This allows enough clearance to remove the bolts without removing the fuel injection rail.
- Loosen the left engine lift bracket enough to allow clearance for the valve cover to be removed. It is not necessary to remove it from the engine.

General Motors' number one priority is our customers' safety. The measures we are taking to remedy the potential oil leaking condition from the valve cover gasket have been validated to be reliable for the life of your vehicle. However, as an extra precaution, we want to eliminate potentially flammable items that are in close proximity to the valve covers. For this reason, do NOT install the cosmetic plastic covering over the top of the engine after the valve cover and gasket are replaced. Please retain the fuel injector sight shield (beauty cover) for the retention period published in the GM Policy and Procedure Manual. Destroy and discard these parts after the retention period to ensure they do not enter the stream of commerce.

3.8L V6 Naturally Aspirated Engine Preliminary Inspection

Note: Clean the area around the tube/oil fill cap before removing the tube/oil fill cap in order to prevent contaminants from falling into the valve cover opening.

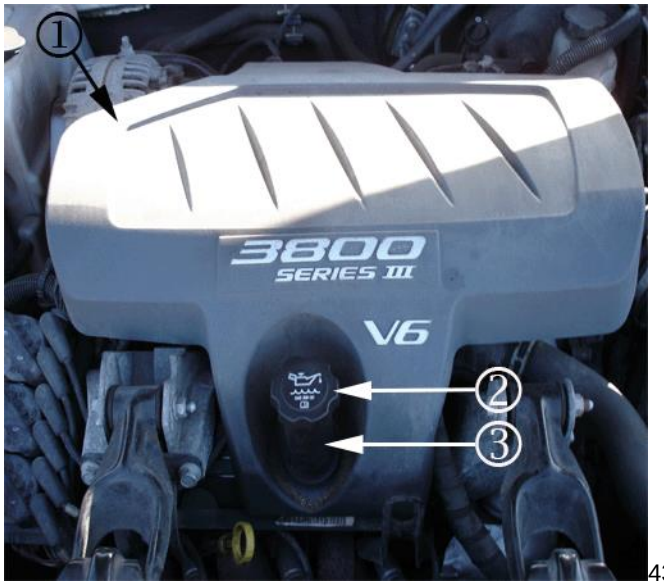

4358359

1. Perform steps 1.1 through 1.4 to remove and discard the fuel injector sight shield (1).
   1.1. Remove the oil fill cap (2) by twisting it counterclockwise.

1.2. Remove the oil fill tube (3) by twisting it counterclockwise and discard.

1.3. Lift the fuel injector sight shield up at the front and slide the tab out of the engine bracket.

1.4. Discard the fuel injector sight shield. Do NOT reinstall the sight shield.

1.5. Inspect the oil fill cap O-ring for damage. If there are signs of damage, replace the O-ring.

1.6. Reinstall the oil fill cap in the valve cover to prevent engine oil contamination.

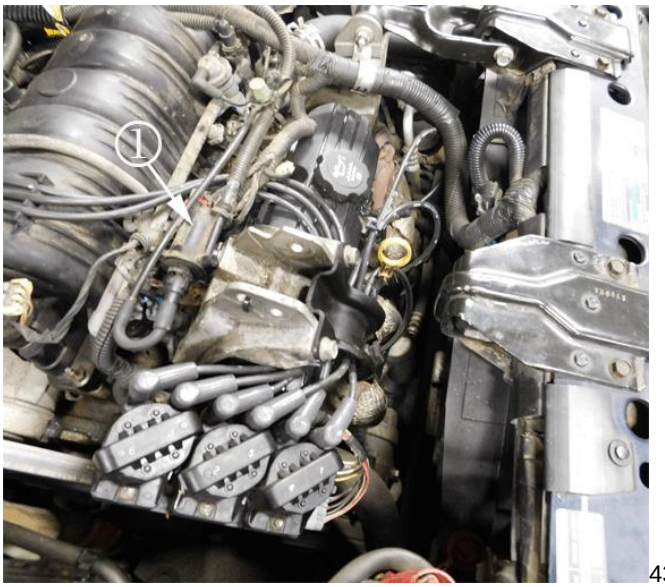

4358361

2. Release the retaining tab on the evaporative emission (EVAP) canister purge mounting bracket and set the EVAP canister purge valve aside (1). Naturally aspirated engine only.

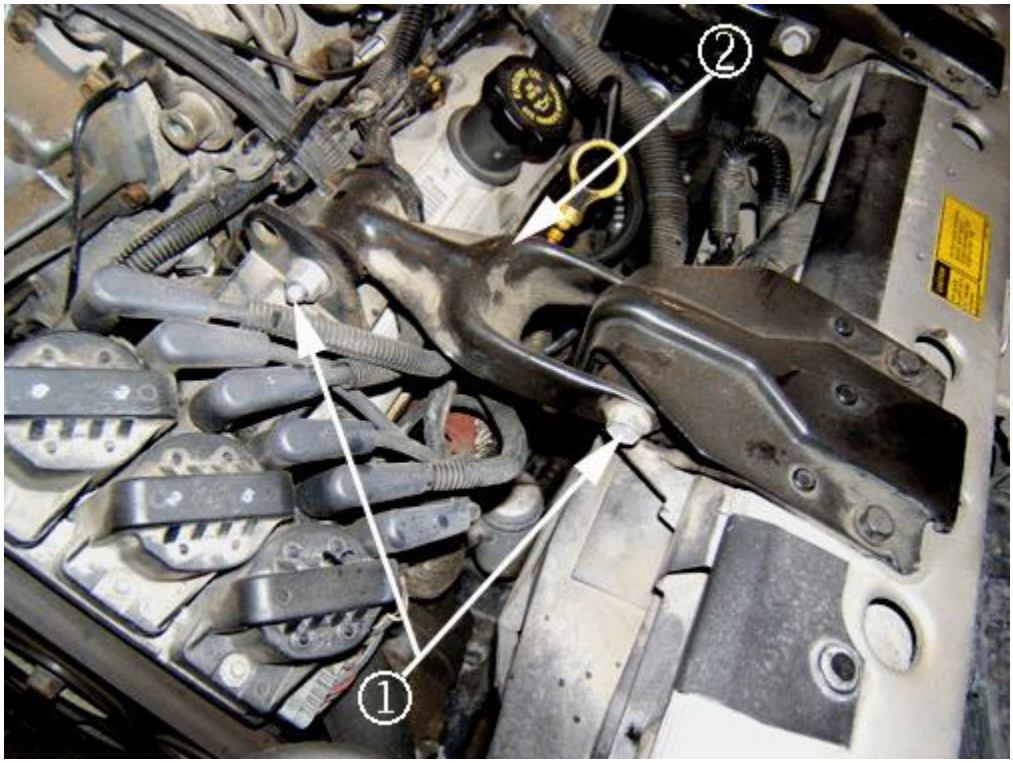

2074279

3. Remove the left engine mount strut (2). Supercharged engine shown. Naturally aspirated engine is similar.

   3.1. Remove the bolt and the nut from the left engine mount strut at the left engine mount strut bracket on the engine (1).

   3.2. Remove the bolt and the nut from the left engine mount strut at the left engine mount strut bracket on the upper radiator support (1).

   3.3. Remove the engine mount strut (2).

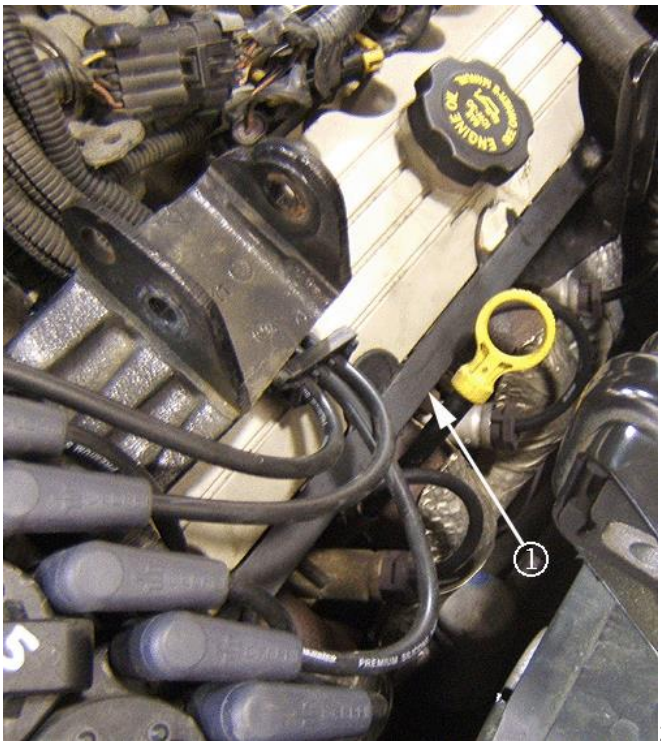

2074278

4. If present, remove the 1-3-5 spark plug plastic retaining channel (cover) clip/bracket (1) from the engine and discard.

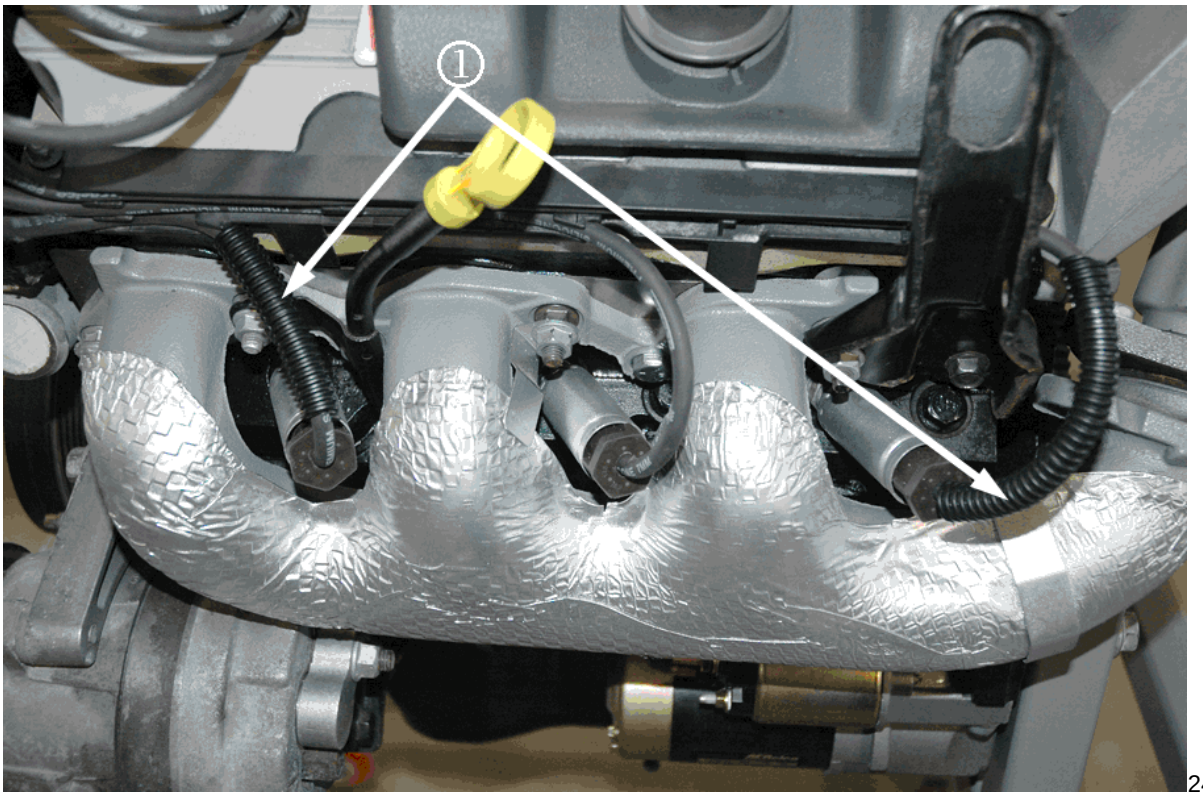

2473373

5. If present, remove any plastic (polypropylene) conduit (1) from the spark plug wires at the front of the engine (should only be found on spark plug wires 1 and 5).

Equipped with 3.8L V6 Naturally Aspirated Engine (RPO L36)

1. Remove the 1-3-5 spark plug wires from the ignition coils.

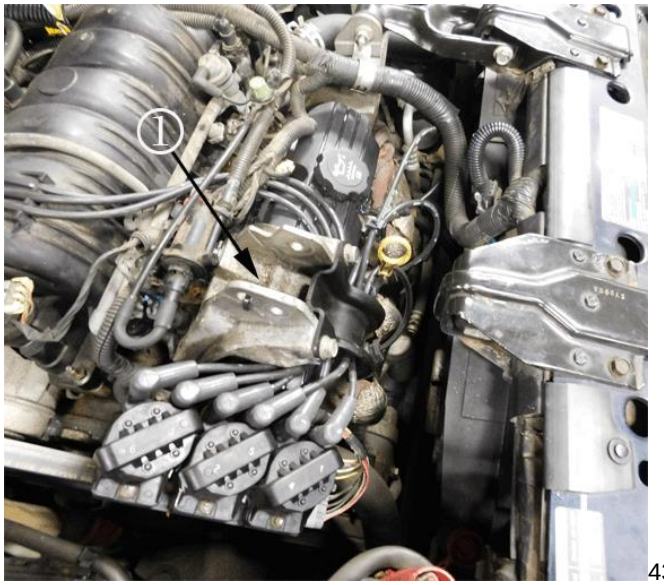

4358363

2. Remove the left engine mount strut bracket (1).

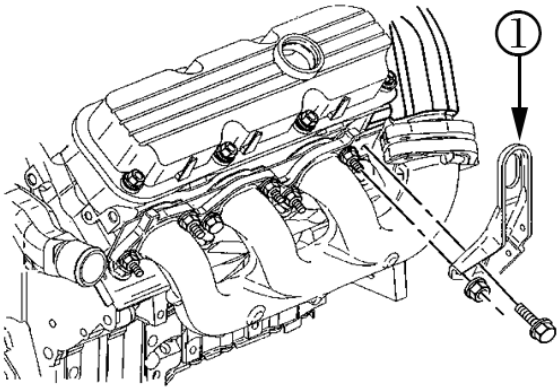

4358366

3. Loosen the left engine lift bracket (1) enough to allow clearance for the valve cover to be removed. It is not necessary to remove it from the engine.

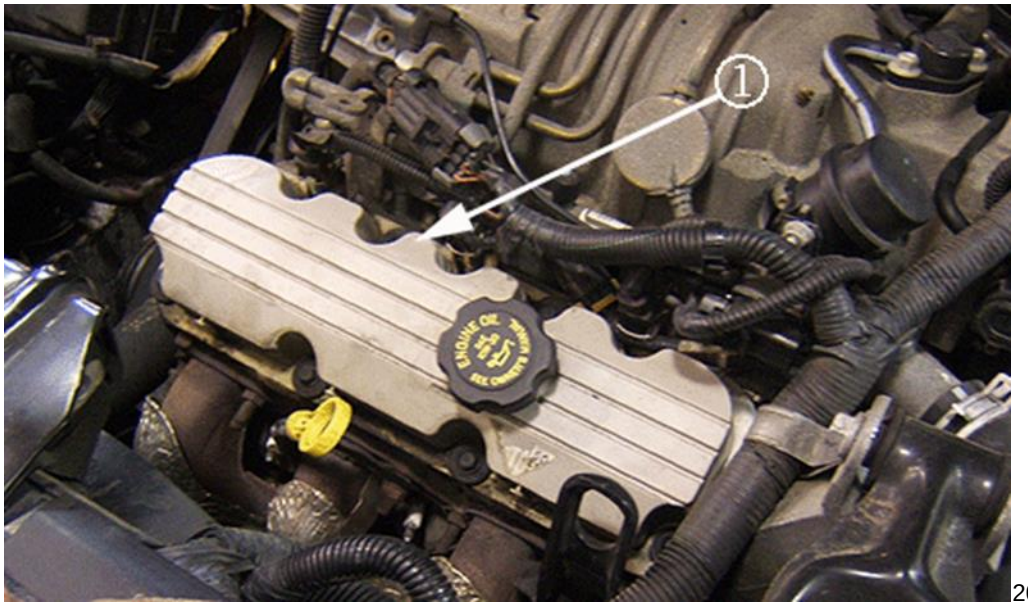

2074284

Danger: Do not use a brake cleaner, or equivalent to remove the oil residue from the exhaust manifold; doing so may cause an engine fire.

Note: Before the removal of the left or front engine valve cover, use an engine degreaser or equivalent in order to remove the oil residue from the exhaust manifold and the oil and dirt residue from the intake manifold, cylinder head, and engine block. It may be necessary to use a brush or scraper.

4. Remove the left or front engine valve rocker arm cover (1) and discard.

   4.1. Remove the valve cover bolts.

Note: If the valve rocker arm cover (1) adheres to the cylinder head, remove the valve cover by bumping the end of the valve cover with palm of hand or with a soft rubber mallet.

   4.2. Remove the valve cover from the engine cylinder head.

4.3. Remove the valve cover gasket.

4.4. Clean the sealing surface on the cylinder head and the valve cover with an engine degreaser or equivalent.

4.5. Clean the valve cover bolts of all dirt, grime or thread locking adhesive.

4.6. Clean the rubber grommets by wiping them off with a shop towel.

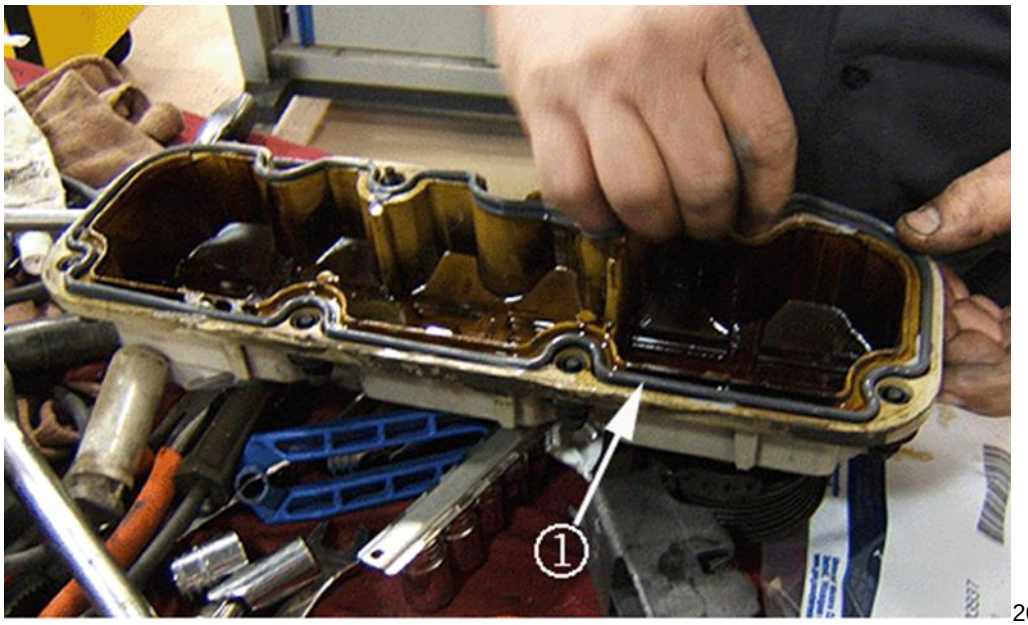

2076766

5. Install a new left or front valve cover gasket (1) into the new valve cover and make sure that the valve cover gasket is seated properly in the valve cover groove. The old valve cover is shown for illustrative purposes only.

   5.1. Install the six valve cover bolts and the six grommets into the valve cover.

   5.2. Apply medium strength thread lock compound (blue) to the six valve cover bolt threads.

   5.3. Install the valve cover and gasket (1) to the cylinder head.

   5.4. Tighten the valve cover bolts to 10 Nm (89 lb in).

6. Install the 1-3-5 spark plug wires to the ignition coils.

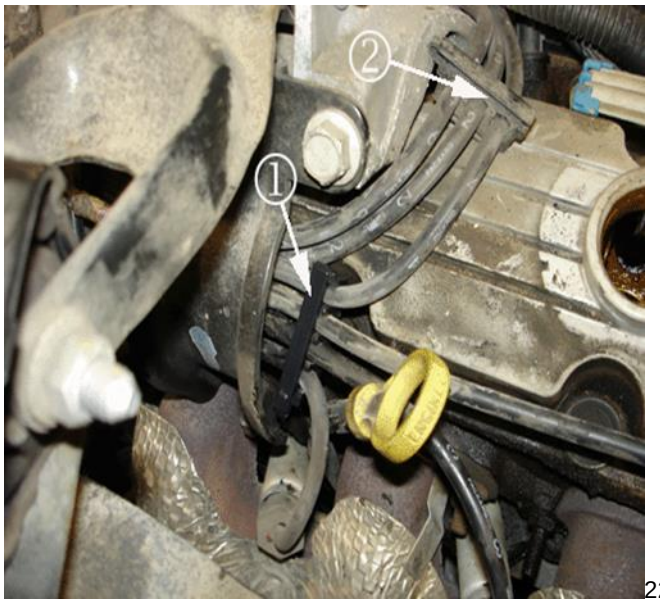

2257359

7. Ensure that spark plug retainer (1) is connected to spark plug wire 4 and spark plug wires 1, 3, and 5. Make sure that spark plug wires 2, 4 and 6 are secured to the original retainers and under the left engine mount strut bracket (2).

2257363

Note: Do NOT position the retainers above an exhaust runner.

8. Ensure that spark plug wires 3 and 5 are routed behind the oil level indicator and lift bracket. Verify that spark plug retainers (1 and 3) are positioned above the #1 and #3 cylinder spark plug wire boots as shown above. Verify that spark plug retainer (3) is approximately 50mm (2 in) from the oil level indicator (2).

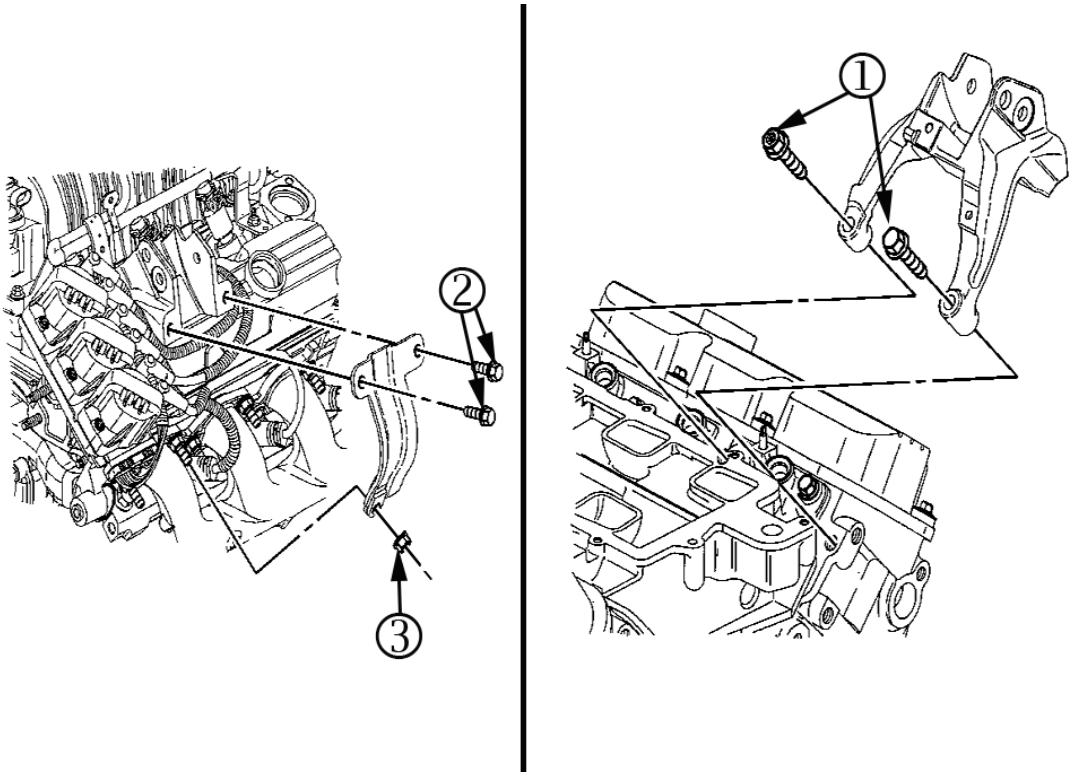

4358369

9. Install the left engine mount strut bracket.
   9.1. Tighten the upper engine mount strut bracket bolts (1) to 50 Nm (37 lb ft).
   9.2. Tighten the lower engine mount strut bracket bolts (2) to 50 Nm (37 lb ft).
   9.3. Tighten the lower engine mount strut bracket nut (3) to 30 Nm (22 lb ft).

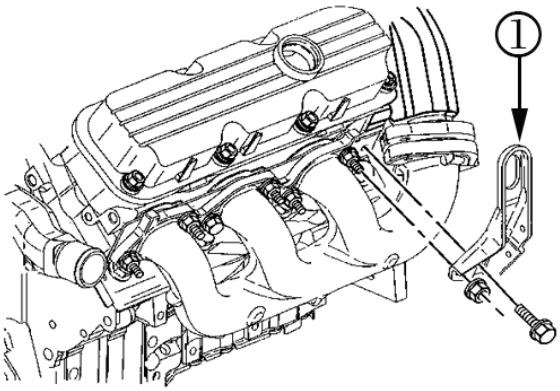

4358366

10. Install the left engine lift bracket (1) and tighten the nut and bolt to 30 Nm (22 lb ft).
11. Install the left engine mount strut and tighten the bolts to 48 Nm (35 lb ft).
12. Inspect for the proper oil level.
13. Inspect for any oil leaks.

WARRANTY TRANSACTION INFORMATION

Submit a transaction using the table below. All transactions should be submitted as a ZFAT transaction type, unless noted otherwise.

Note: *To avoid having to "H" route the customer reimbursement for approval, it must be submitted prior to the repair transaction.*

Labor Code	Description	Labor Time
V2066	Install Spark Plug Retainers	0.2
9101986	Replace Valve Rocker Arm Cover and Gasket – Naturally Aspirated Engine (RPO L36 – VIN K)	0.5

CUSTOMER NOTIFICATION

General Motors will notify customers of this recall on their vehicle (see copy of customer letter included with this bulletin).

DEALER RECALL RESPONSIBILITY – For US (US States, Territories, and Possessions)

It is a violation of Federal law for a dealer to deliver a new motor vehicle or any new or used item of motor vehicle equipment (including a tire) covered by this notification under a sale or lease until the defect or noncompliance is remedied.

The US National Traffic and Motor Vehicle Safety Act provides that each vehicle that is subject to a recall of this type must be adequately repaired within a reasonable time after the customer has tendered it for repair. A failure to repair within sixty days after tender of a vehicle is prima facie evidence of failure to repair within a reasonable time. If the condition is not adequately repaired within a reasonable time, the customer may be entitled to an identical or reasonably equivalent vehicle at no charge or to a refund of the purchase price less a reasonable allowance for depreciation. To avoid having to provide these burdensome remedies, every effort must be made to promptly schedule an appointment with each customer and to repair their vehicle as soon as possible. In the recall notification letters, customers are told how to contact the US National Highway Traffic Safety Administration if the recall is not completed within a reasonable time.

DEALER RECALL RESPONSIBILITY – All

All new, used, GM Certified Used, courtesy transportation vehicles, dealer shuttle vehicles, etc. in dealers' possession and subject to this recall must be held and inspected/repaired per the service procedure of this bulletin before customers take possession of these vehicles. Involved vehicles must be held and not delivered to customers, dealer-traded, released to auction, used for demonstration, or any other purpose.

All GM Certified Used vehicles currently in the dealers' inventory within the Certified Pre-Owned Inventory System (CPOIS) will be de-certified and must be held and remedied per the service procedure in this bulletin. Upon submitting an accepted/paid warranty transaction in the Global Warranty Management (GWM) system, the vehicle can be re-certified for sale within the CPOIS system, or once again be used in the CTP program.

Dealers are to service all vehicles subject to this recall at no charge to customers, regardless of mileage, age of vehicle, or ownership, from this time forward.

Customers who have recently purchased vehicles sold from your vehicle inventory, and for which there is no customer information indicated on the dealer listing, are to be contacted by the dealer. Arrangements are to be made to make the required correction according to the instructions contained in this bulletin. A copy of the customer letter is provided in this bulletin for your use in contacting customers. Recall follow-up cards should not be used for this purpose, since the customer may not as yet have received the notification letter.

In summary, whenever a vehicle subject to this recall enters your vehicle inventory, or is in your dealership for service in the future, you must take the steps necessary to be sure the recall correction has been made before selling or releasing the vehicle.

GM bulletins are intended for use by professional technicians, NOT a "do-it-yourselfer". They are written to inform these technicians of conditions that may occur on some vehicles, or to provide information that could assist in the proper service of a vehicle. Properly trained technicians have the tools, equipment, safety instructions, and know-how to do a job properly and safely. If a condition is described, DO NOT assume that the bulletin applies to your vehicle, or that your vehicle will have that condition. See your dealer for information on whether your vehicle may benefit from the information.

We Support Voluntary Technician Certification

IMPORTANT SAFETY RECALL

April 2009

This notice applies to your vehicle, **VIN:** _____

Dear General Motors Customer:

This notice is sent to you in accordance with the National Traffic and Motor Vehicle Safety Act.

General Motors has decided that a defect, which relates to motor vehicle safety, exists in certain 1997-2003 model year Buick Regal and Pontiac Grand Prix, 1998-1999 model year Chevrolet Lumina and Oldsmobile Intrigue, 1998-2003 model year Chevrolet Monte Carlo, and 2000-2003 model year Chevrolet Impala model vehicles, equipped with a 3.8L V6 naturally aspirated engine. As a result, GM is conducting a safety recall. We apologize for this inconvenience. However, we are concerned about your safety and continued satisfaction with our products.

IMPORTANT

- Your vehicle is involved in GM recall 09047.
- Schedule an appointment with your GM dealer.
- This service will be performed for you at **no charge**.

Why is your vehicle being recalled?

An underhood fire may be caused by drops of engine oil, from seepage or spillage, being deposited on the exhaust manifold through hard braking. If the manifold is hot enough, the oil may ignite into a small flame and, in some instances, the fire may spread to the plastic spark plug wire channel and beyond. If this occurs, there could be a fire in your vehicle and nearby property.

What will we do?

Your GM dealer will replace the spark plug wire channel with new spark plug wire retainers. This service will be performed for you at no charge. Because of service scheduling requirements, it is likely that your dealer will need your vehicle longer than the actual service correction time of approximately 15 minutes..

What should you do?

You should contact your GM dealer to arrange a service appointment as soon as possible. Bring the enclosed customer reply form with you when you visit your dealer. The form identifies the repairs required. If you no longer own this vehicle, please let us know by completing the form and mailing it back to us.

There are two very important precautions you should take before your vehicle is serviced:

- We strongly recommend you not park your vehicle in a garage, car port, or other structure.

- If you notice a burning odor, you should have your GM dealer inspect your vehicle immediately. The dealer will inspect your vehicle without charge.

Do you have questions?

If you have questions or concerns that your dealer is unable to resolve, please contact the appropriate Customer Assistance Center at the number listed below.

Division	Number	Text Telephones (TTY)
Buick	1-800-521-7300	1-800-832-8425
Chevrolet	1-800-222-1020	1-800-833-2438
Pontiac	1-800-762-2737	1-800-833-7668
Puerto Rico – English	1-800-496-9992	
Puerto Rico – Español	1-800-496-9993	
Virgin Islands	1-800-496-9994	

If after contacting your dealer and the Customer Assistance Center, you are still not satisfied we have done our best to remedy this condition without charge and within a reasonable time, you may wish to write the Administrator, National Highway Traffic Safety Administration, 1200 New Jersey Avenue, SE, Washington, DC 20590, or call the toll-free Vehicle Safety Hotline at 1.888.327.4236 (TTY 1.800.424.9153), or go to http://www.safercar.gov. The National Highway Traffic Safety Administration Campaign ID Number for this recall is 09V116.

Federal regulation requires that any vehicle lessor receiving this recall notice must forward a copy of this notice to the lessee within ten days.

Scott Lawson
Director
Customer and Relationship Services

GM Recall #09047