February 26, 2016 03188 Version 5

Safety Recall: Piston Pin Snap Ring Inspection

Supersedes 16-017, dated February 24, 2016, to revise the information highlighted in yellow.

AFFECTED VEHICLES

Year	Model	Trim	VIN Range
2016	Civic with 2.0L engine	ALL	Check the iN VIN status for eligibility

REVISION SUMMARY

Under INSPECTION PROCEDURE, a note and picture was added under step 16, and a note was added under step 19.

BACKGROUND

A small number of engines were produced with piston pin snap rings that may not be completely seated. If the snap ring is not completely seated, the piston pin can move from its original location in the piston, resulting in engine failure.

CUSTOMER NOTIFICATION

Owners of affected vehicles will be sent a notification of this campaign.

Do an iN VIN status inquiry to make sure the vehicle is shown as eligible.

Some vehicles affected by this campaign may be in your new or used vehicle inventory. These vehicles must be repaired before they are sold.

Should your dealership sell an unrepaired vehicle that subsequently causes injury or damage because of the recalled item, the dealership will be solely responsible to the damaged party and will be required to defend and indemnify American Honda for any resulting claims. To see if a vehicle in inventory is affected by this recall, do a VIN status inquiry before selling it.

CORRECTIVE ACTION

Inspect the piston pin snap rings. If there are any that are not completely set or missing, replace the affected piston rings and snap rings. In rare cases the piston pin(s) may damage the engine block, requiring replacement of the engine short block. Replaced short blocks will be called into Warranty Inspection to confirm the damage.

REQUIRED MATERIALS

Part Name	Part Number	Quantity
Honda Bond HT (One tube repairs about 4 vehicles.)	08718-0004	1

CUSTOMER INFORMATION: The information in this bulletin is intended for use only by skilled technicians who have the proper tools, equipment, and training to correctly and safely maintain your vehicle. These procedures should not be attempted by “do-it-yourselfers,” and you should not assume this bulletin applies to your vehicle, or that your vehicle has the condition described. To determine whether this information applies, contact an authorized Honda automobile dealer.

© 2016 American Honda Motor Co., Inc. – All Rights Reserved

PARTS INFORMATION

Part Name	Part Number	Quantity
Exhaust Pipe Gasket	18303-TR0-A01	1
Exhaust Pipe Gasket	18302-SP0-003	1
Self-Lock Nut (10 mm)	90212-SA5-003	6
Flange Bolt (14 mm x 100 mm)	90161-T5A-000	1
Gear Box Mounting Bolt	90108-TL1-G00	1
Drain Plug Washer	94109-14000	1
SYNBLND (0W-20)	08798-9036	5

NOTE: It is okay to use bulk engine oil instead of bottles

TOOL INFORMATION

Tool Name	Tool Number	Quantity
Snap-on Borescope	BK5600	1

WARRANTY CLAIM INFORMATION

NOTE:

- Contact Tech Line for additional information if you find a snap ring missing or misset as noted in step 19.
- For administrative compensation for the submission of photos, please select the **PH** drop-down in the sublet section of the Warranty Claim.

Operation Number	Description	Flat Rate Time	Defect Code	Symptom Code	Failed Part Number
1105B6	Remove the engine oil pan and inspect the piston pin snap rings. Includes inspection and photos.	2.5 hrs	6PC00	JX900	13010-5BA-A00

Skill Level: Repair Technician

SETTING UP THE BORESCOPE

Before using the supplied borescope, insert the batteries, review the included instructions and make sure you do the following:

1. Turn on the borescope and set the time and date. You only need to do this the first time you use the tool.

   NOTE: Time and Date will be lost if dead batteries are not replaced immediately.

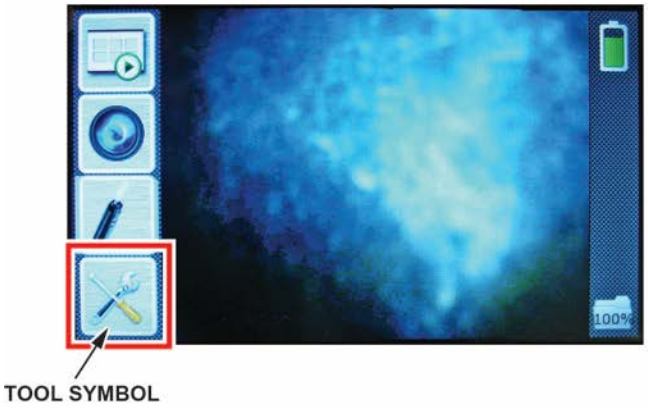

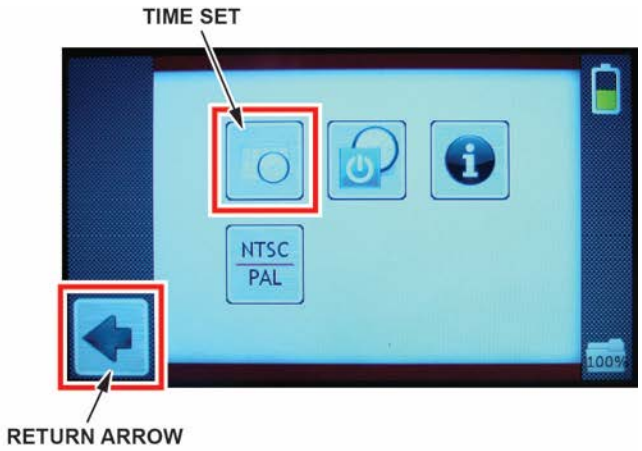

2. Install the 90-degree mirror accessory by aligning the alignment dot with the slot.

   NOTE: Make sure the mirror tip is very clean before inspecting. A dirty mirror can give distorted images.

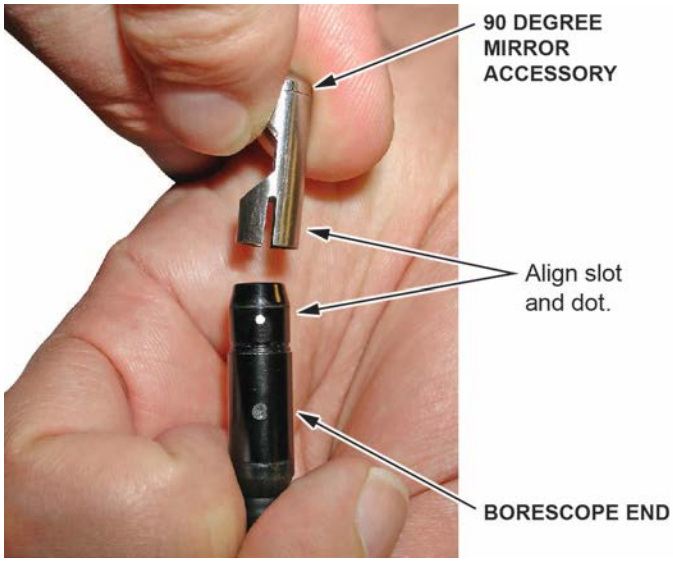

3. Set the borescope to use the 90-degree mirror. You need to do this every time you turn on the borescope or it will be difficult to maneuver the probe**.** Select the tip, then select the 90-degree tip icon**.**

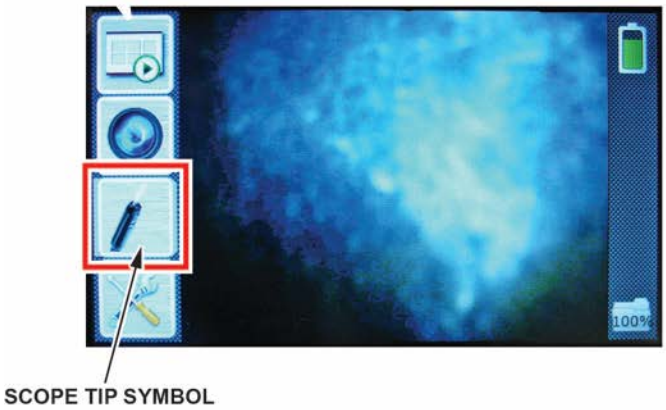

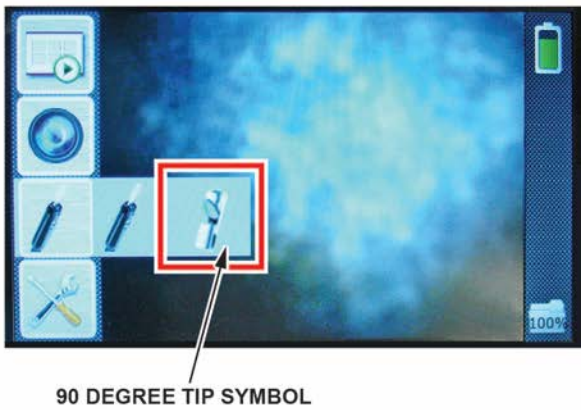

INSPECTION PROCEDURE

1. Remove the drive belt.
2. Remove the engine oil dipstick.
3. Raise the vehicle on a lift.
4. Remove the engine undercover lid.

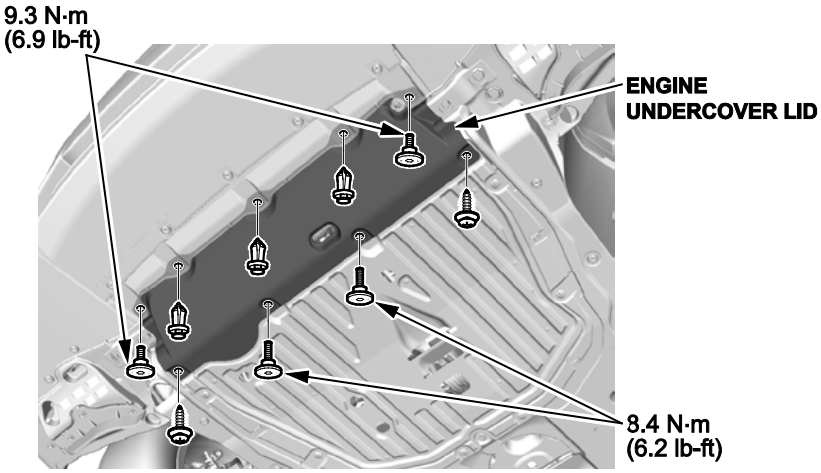

5. Remove the engine undercover.

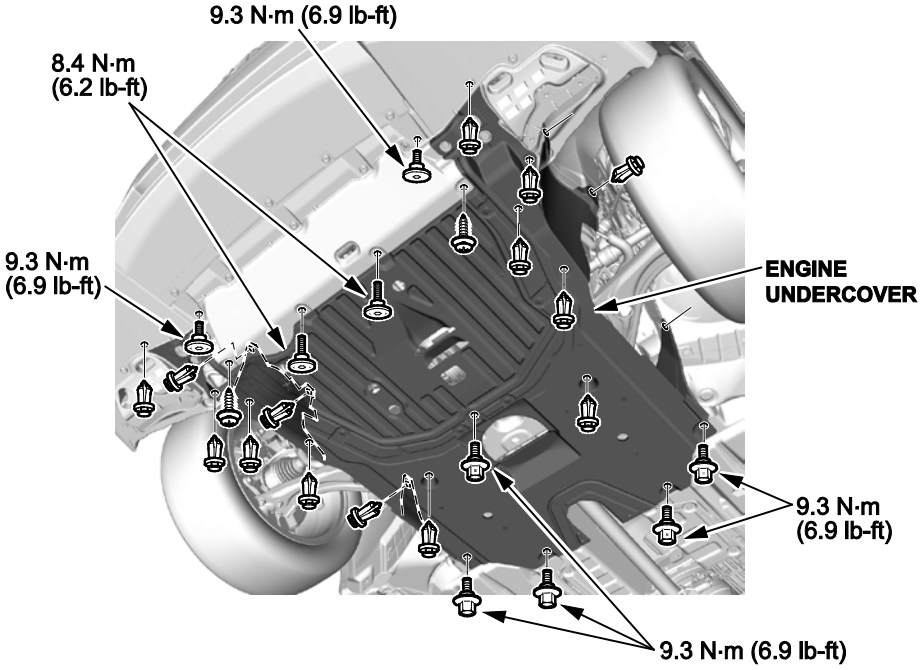

6. Drain the oil from the engine.
7. Remove exhaust pipe A.

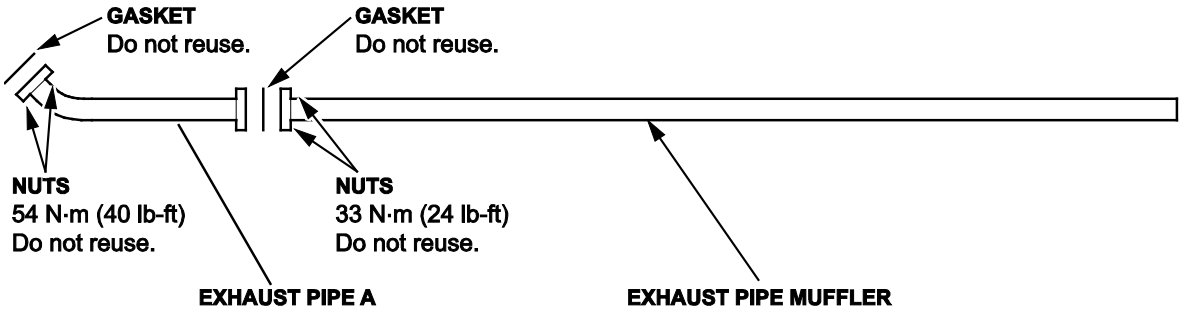

8. Remove the A/C compressor mounting bolts and move the compressor away from the oil pan bolts.

   NOTE:
   - Do not disconnect the suction hose and the discharge hose.
   - Do not bend the suction hose and the discharge hose excessively.
   - Hang the A/C compressor with a wire tie.
9. Remove the clutch cover (M/T) or the torque converter cover (CVT) and the transmission mounting bolts.

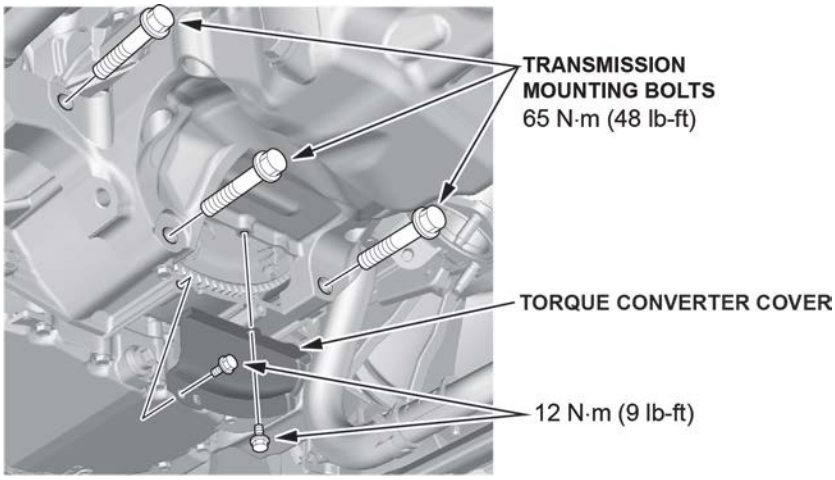

10. Remove the torque rod.

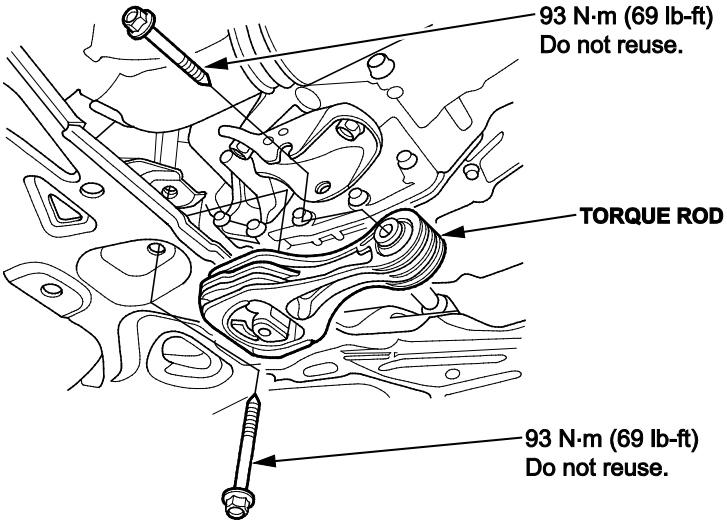

11. Remove the oil pan mounting bolts.
12. Using a flat-blade screwdriver, separate the oil pan from the lower block.
13. Remove the oil pan.

    NOTE: Reuse the oil pump O-ring unless it is damaged during removal.
14. Remove the baffle plate.

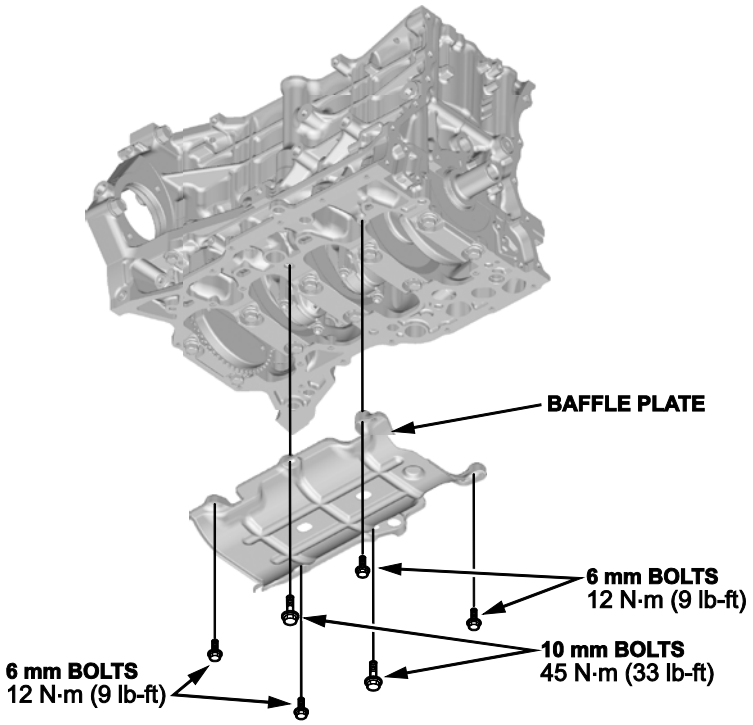

15. Remove the oil strainer.

    NOTE: Reuse the oil strainer gasket unless it has been damaged during removal.

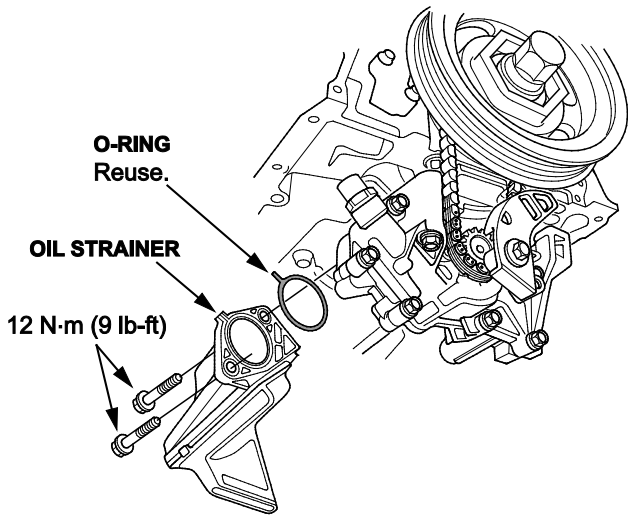

16. Using the Snap-on BK5600 with the 90-degree tip installed, rotate the engine so the No.1 cylinder is at TDC. Carefully insert the tip of the borescope and inspect cylinders No.1 and No.4. Then, rotate the engine so the No.2 cylinder is at TDC and repeat the process with cylinders No.2 and No.3.

NOTE: You may notice a black mark on the snap ring and piston. This is a factory check mark and could be mistaken for the snap ring gap.

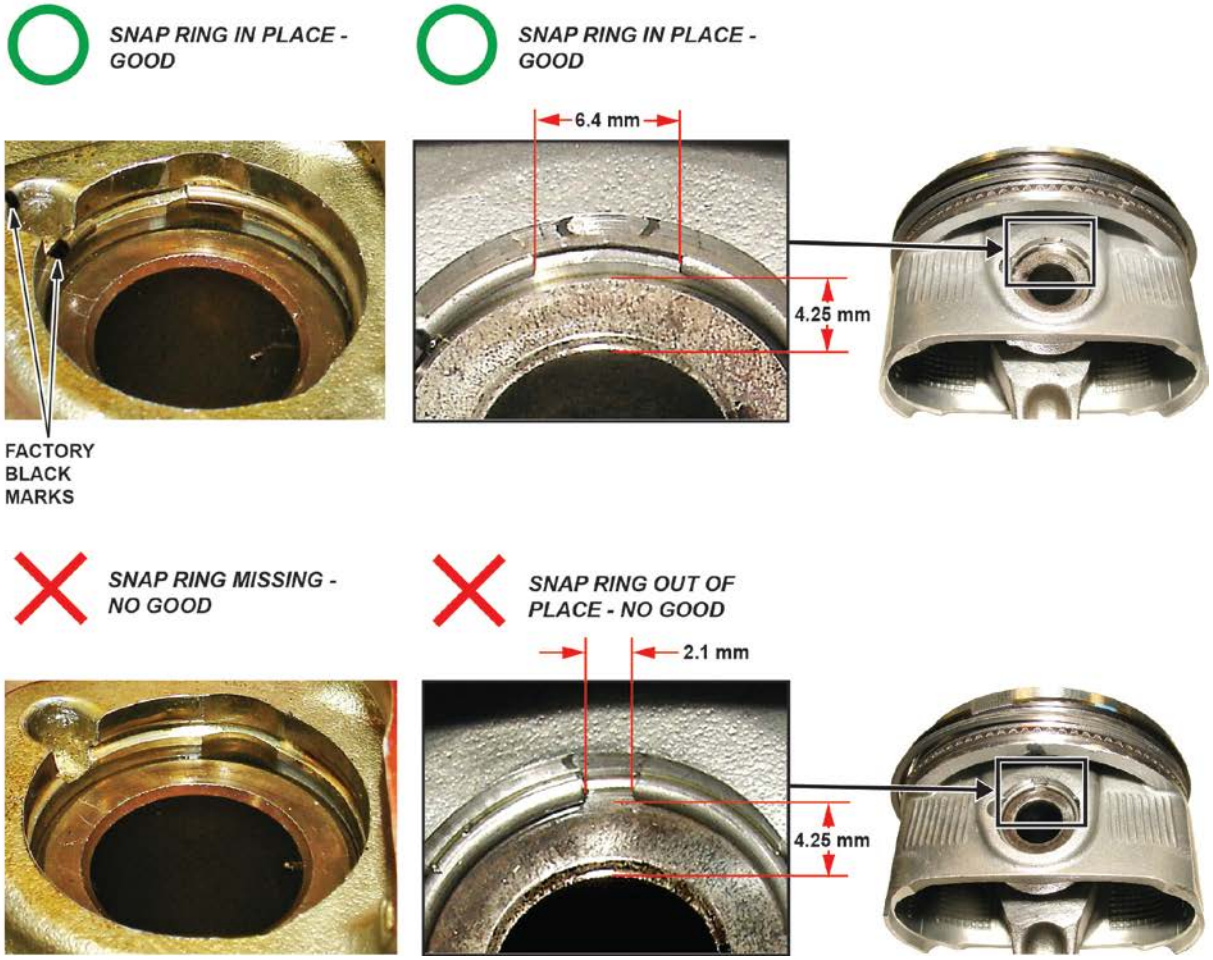

17. Rotate the probe to confirm that the snap ring is fully engaged in the piston pin groove. A properly seated snap ring will have a 6 mm gap at the ends of the snap ring, as shown above. A misset snap ring will have a much smaller gap, around 2 mm.
18. Take a photo of each snap ring. Focus on getting a clear picture of each snap ring gap. You will need to take a picture of each side of all four pistons for a total of eight pictures.

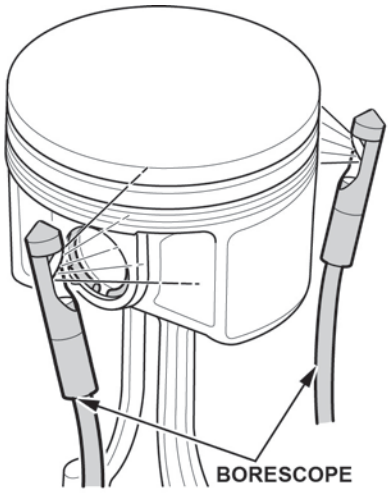

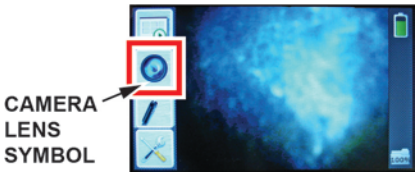

19. Repeat for the remaining three pistons.
    - If all snap rings are installed properly, no further action is necessary. Reassemble in the reverse order of disassembly.
      NOTE: When installing the oil pan, apply a 2.5 mm bead of Honda Bond HT to the mounting surface. Install the oil pan within 5 minutes and torque the bolts in three steps in the sequence shown below. In this specific application no cure time is required.

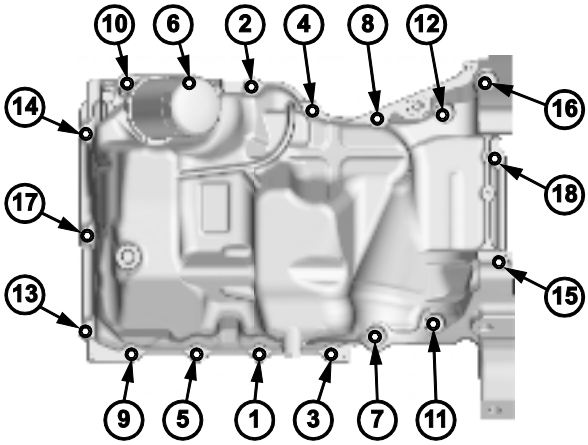

Specified Torque
12 N·m (9 lb-ft)

- If the snap ring is misset, take a clear picture of the misset snap ring and contact Tech Line to assist you with obtaining replacement piston assemblies.
- If a snap ring is missing and the engine cylinder wall does not have any damage, take a clear picture of the piston pin with the missing snap ring and contact Tech Line. They will assist you with obtaining the replacement piston assemblies.
- If the snap ring is missing and the engine has cylinder wall damage, order a replacement short block.

20. After all photos are taken, save them to your computer by connecting the borescope to it using the included USB cable. Give the photos to your warranty administrator for the warranty claim to be paid. Eight images of the snap rings must be included in the warranty claim or it may be rejected.

END