Service Bulletin

SAF-HOLLAND Group

Trailer Air Suspension Systems

Cast Beam Pivot Bolt Replacement

MAY 2014

SAF-HOLLAND® has identified certain CBX suspensions that have a pivot bolt that may not meet our specifications. The CBX suspensions referenced in this bulletin were manufactured between the dates of September 20, 2013 through November 30, 2013 (suspension serial number range 51 13 263 xxxx through 51 13 334 xxxx). It will be necessary to have all pivot bolts changed out on the units affected.

You have been identified as the owner of a trailer which may be affected by this condition. You will be required to exchange the pivot bolts, nuts, and washers on each axle of your trailer suspension systems with kits that will be supplied by SAF-HOLLAND® at no charge. You will be sent one service repair kit, SRK-710, per axle on your trailer. Each kit will include all of the appropriate hardware to facilitate this repair procedure.

For this pivot bolt changeover, SAF-HOLLAND® has agreed to cover 2.0 hour(s) repair time per axle. Once the repair procedure is complete, you will need to supply the trailer manufacture your suspension serial number, vehicle identification number, in-service date, and date of repair completion for labor reimbursement ***Table 1***.

For your convenience, a form is provided with all of the required information needed to facilitate the labor reimbursement. Once work is completed, please submit all forms to your OEM for recording and reimbursement.

We apologize for any inconvenience this may cause; SAF-HOLLAND® is committed to serving our customers with quality products.

Model Identification

The location of the serial tag is found on roadside hanger, fixed frame suspension ***(Figure 1)***, or rear cross member, slider assembly ***(Figure 2)***.

The sample tag shown will help you interpret the information on the SAF-HOLLAND®, Inc. serial tag. The part number is on the first line. The model number along with the suspension capacity are on the second line. The third line contains the serial number.

Figure 1

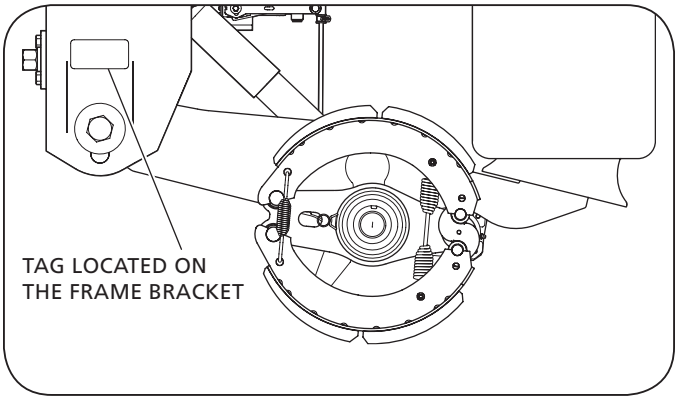

Figure 2

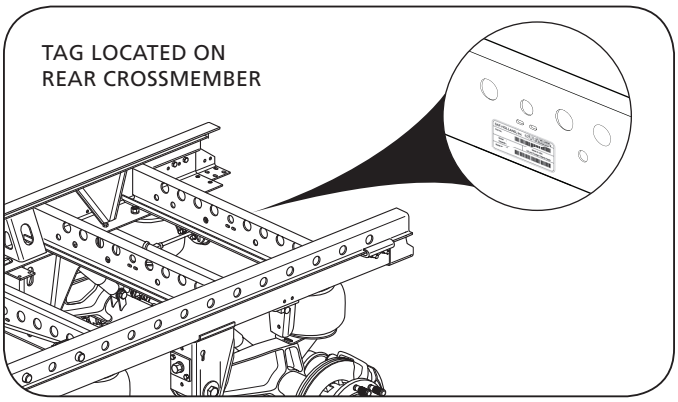

Figure 3

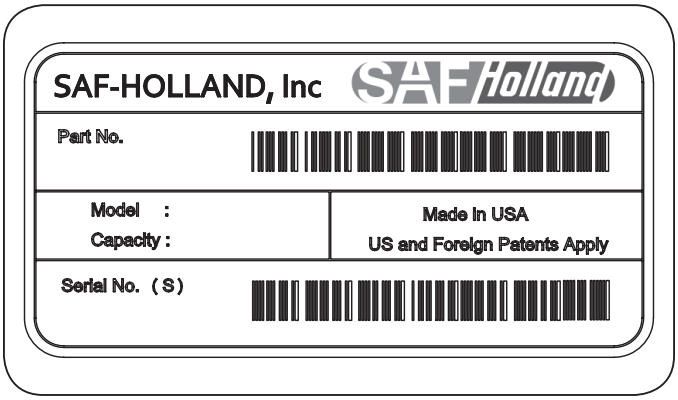

SAF-HOLLAND Group

Table 1

OEM	SUSPENSION SERIAL NUMBER(S)	TRAILER VIN	IN-SERVICE DATE	COMPLETION DATE