Trailer Axle Hub Stud Breakage Identification - Recall Number 15E-029

NOTE: This document affects trailer drums being supplied from Lippert Components, Inc.

Lippert has been notified of broken studs on certain drums supplied by, and installed on, LCI axle assemblies. If you are in receipt of this communication, you may be in possession of an affected unit. To confirm a suspected drum, first, reference the affected VIN listing provided by the Vehicle Manufacturer (attached). If the VIN is in the affected scope, follow the procedure outlined in the **Trailer Axle Hub Replacement Manual**. If the drum is determined to be affected, it **MUST** be replaced, see **Trailer Axle Hub Replacement Manual** for proper replacement procedure.

The affected drums **do not need to be returned**, but the repair facility will need to submit a clear photo of each axle tag with the axle serial number and manufactured date (also on the axle tag) (see Figs. 5 & 6) and a clear photo of the affected drum(s) (see Figs. 1-4) to include with their claim. All original drums **MUST** be destroyed and cannot be reused or sold.

Inspection Procedure

Step 1. Check the Axle Tag, Figs. 4 & 5, for the manufacture date. If the date falls on any of the following proceed to step 2:

INDIANA AXLE DATES - 2015: 3/13, 3/17, 4/10, 4/13, 4/14, 4/15

IDAHO AXLE DATES - 2015: 3/20, 3/23, 3/24, 3/25, 3/26, 3/27, 3/30, 4/1, 4/2, 4/3, 4/6, 4/7

NOTE: If the axle tag date is not listed above, no further repair is required, but it WILL be necessary to document the inspection to include the axle serial number and date listed on the axle tag.

Step 2. Inspect drum for Tru Ryde or Axle Tek logo:

- **A.** Safely jack up and support the unit according to the manufacturer's instructions.
- **B.** Remove lug nuts from wheels on the axle(s) to be inspected.
- **C.** Remove the wheel and check the drum face:

Fig. 1

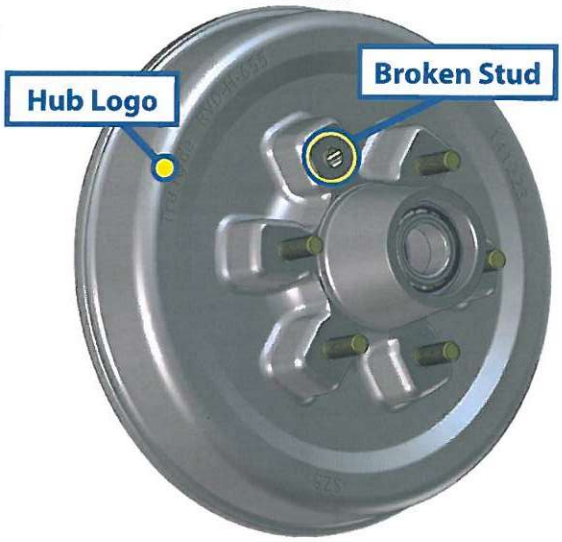

FOR INDIANA ONLY

Axle Date of Manufacture	Drum Type	Replace?
3/13, 3/17	Tru Ryde Axle Tek LCI	Yes No No
4/10, 4/13, 4/14, 4/15	Tru Ryde Axle Tek LCI	No Yes No

FOR IDAHO ONLY

Axle Date of Manufacture	Drum Type	Replace?
3/20, 3/23, 3/24, 3/25, 3/26, 3/27, 3/30, 4/1, 4/2, 4/3, 4/6, 4/7	Tru Ryde Axle Tek LCI	Yes No No

NOTE: If the DOM and Drum Type combination match those listed in the tables above, the drum(s) **MUST** be replaced. Kits can be ordered by contacting Lippert Components, Inc. directly or the units OEM, see Fig. 7 for the list of kits. See the **Trailer Axle Hub Replacement Instructions** on page 3. If the DOM and Drum Type do not match the chart listings, the drums do not need to be replaced.

Fig. 2 - Tru Ryde Drum

Fig. 3 - Axle Tek Drum

Fig. 4 - LCI Drum

Fig. 5 - Indiana Axle Tag

NOTE: The Axle Tag images are for reference only, see Figs. 5 & 6. The information on the pictured tags does not represent the axles included in this notification.

Fig. 6 - Idaho Axle Tag

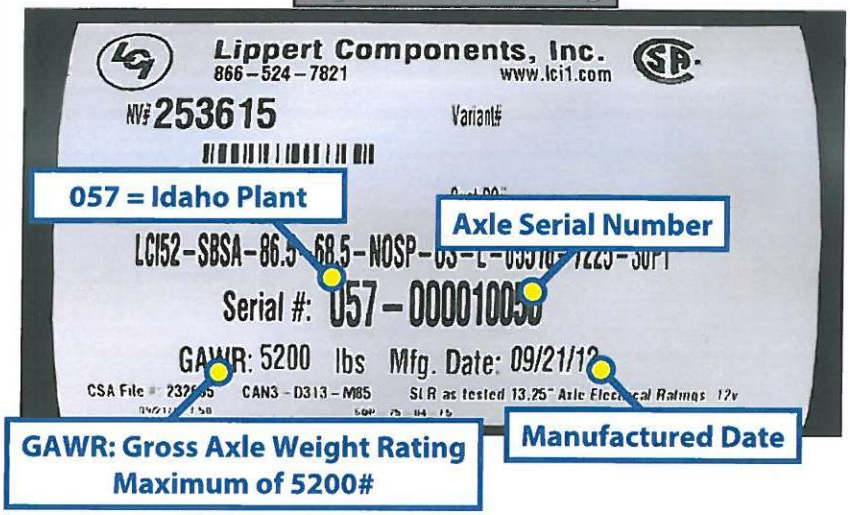

NOTE: The Axle Tags demonstrate the plants from which the original axles in question were shipped, see Figs 5 & 6. Please take note of the first three numbers of the Serial Numbers on the Axle Tags to determine the plant of origin.

Fig. 7 - Drum Replacement Kits

NOTE: All Drum Replacement Kits are listed by LCI part number.

Kit - 378157 - GAWR: 5200 lb.	**Kit - 378538 - GAWR: 3500 lb.**	**Kit - 378536 - GAWR: 7000 lb.**
1. Hub - 12" - 6 Lug	1. Hub - 10" - 5 Lug	1. Hub - 12" - 8 Lug
2. Hub Replacement Manual	2. Hub Replacement Manual	2. Hub Replacement Manual
3. Cotter Pin	3. Cotter Pin	3. Cotter Pin

Trailer Axle Hub

REPLACEMENT MANUAL

LIPPERT COMPONENTS®

TABLE OF CONTENTS

Safety Information 2
Hub Removal 3
Hub Replacement 5
Wheel Torque Requirements 7

Safety Information

⚠WARNING

The "WARNING" symbol above is a sign that a service or maintenance procedure has a safety risk involved and may cause serious injury or death if not performed safely and within the parameters set forth in this manual.

Always wear eye protection when performing service or maintenance to the vehicle. Other safety equipment to consider would be hearing protection, gloves and possibly a full face shield, depending on the nature of the service.

The owner's manual for your unit may have more procedures for service and maintenance.

NOTE: The images shown in this manual are for illustrative purposes only and may not exactly match the components on the axle being serviced.

Hub Removal

1. Lift and support unit per manufacturer's requirements.

⚠WARNING

Lift unit by the frame and never the axle or suspension. Do not go under unit unless it is properly supported by jack stands. Unsupported units can fall causing death or serious injury.

2. Remove the lug nuts from the wheel and set aside (Fig. 1).
3. Remove the wheel from the axle hub and set aside (Fig. 2).

Fig. 1

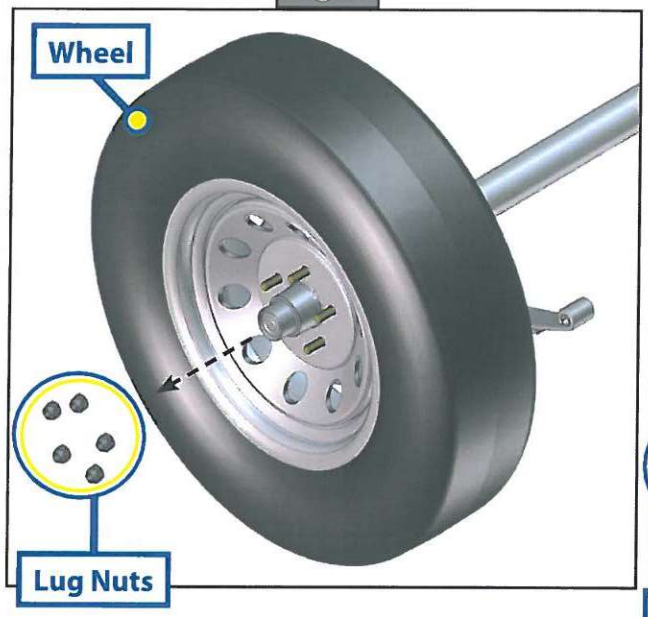

Fig. 2

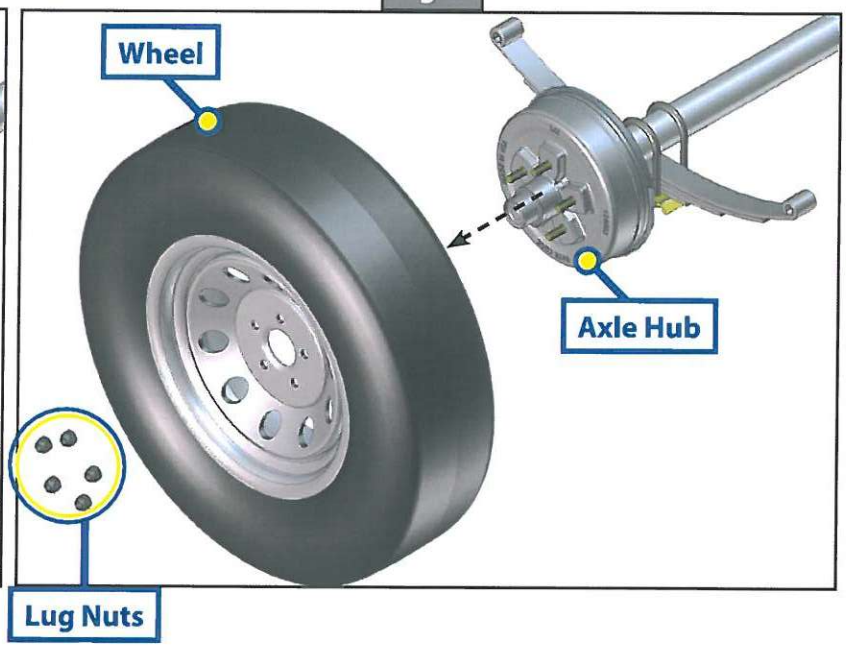

4. Remove the dust cap by prying the edge out of the hub (Fig. 3). If equipped with oil lubrication, unscrew oil cap using a 2½" socket. Let oil drain into pan.
5. Pull the cotter pin from the castle nut and ***DISCARD THE COTTER PIN*** (Fig. 4).

Fig. 3

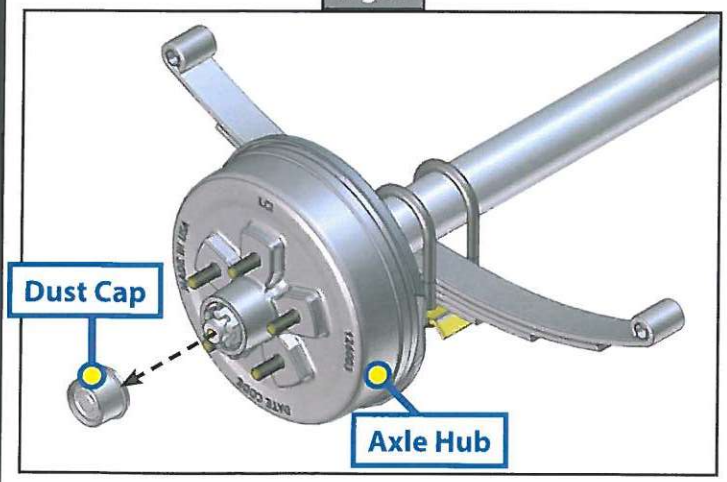

Fig. 4

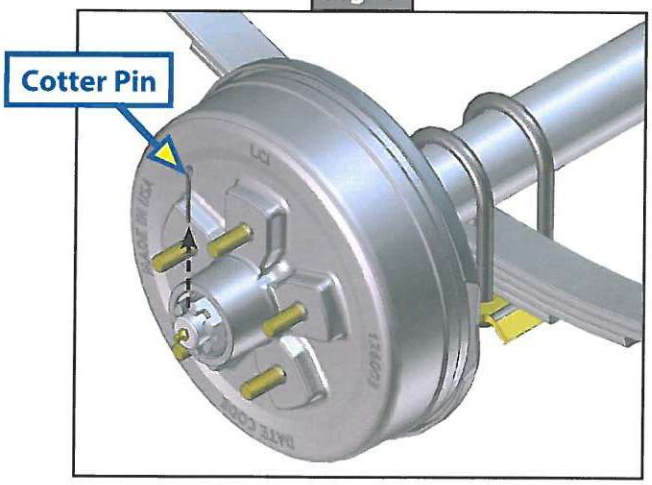

6. Remove the castle nut from the spindle (Fig. 5).
7. Remove the spindle washer from the spindle (Fig. 6).
8. Place hand over nose of hub during removal to contain outer bearing cone or remove outer bearing cone prior to removal of hub. Remove the hub from the spindle (Fig. 7).

NOTE: Brakes may need to be adjusted or backed off to remove drum from spindle.

NOTE: A gear puller may be necessary to remove hub from spindle.

Fig. 5

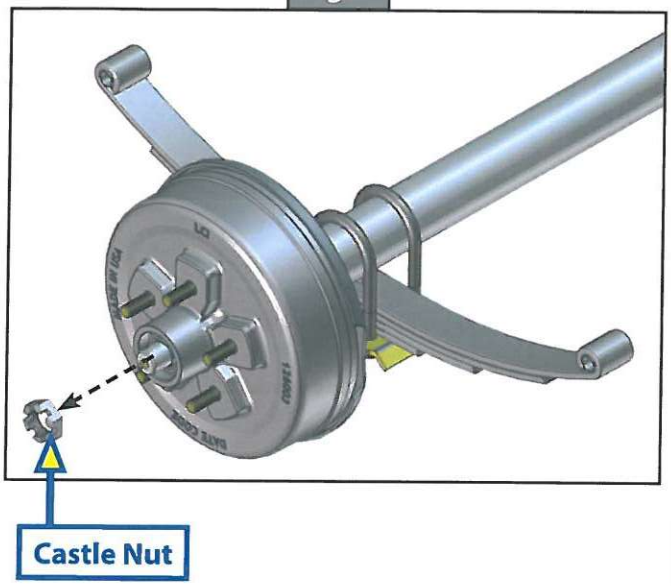

Fig. 6

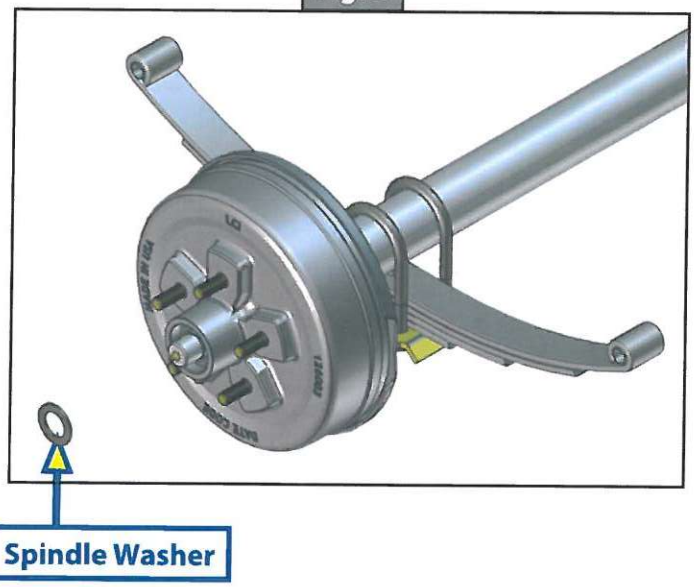

Fig. 7

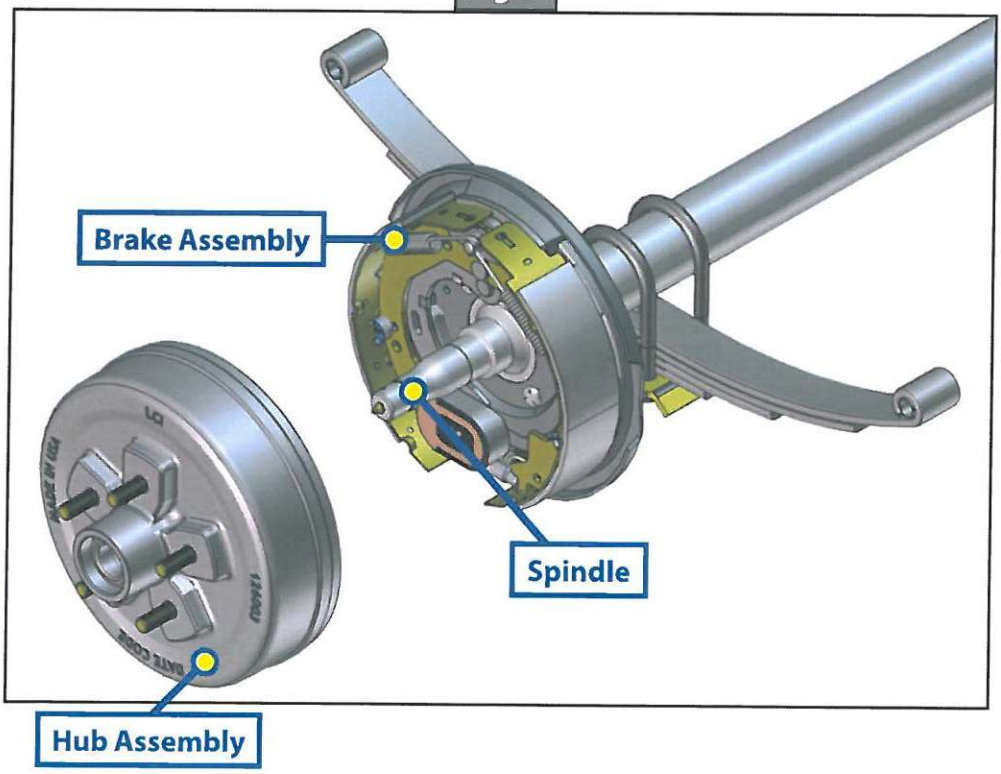

Hub Replacement

NOTE: Wipe all grease from spindle prior to hub install to prevent brake contamination after hub install.

1. Place new hub assembly onto the axle spindle followed by the spindle washer and castle nut (Fig. 8). Castle nut should be torqued to 50 ft.-lb. Rotate the hub during the tightening process.

Fig. 8

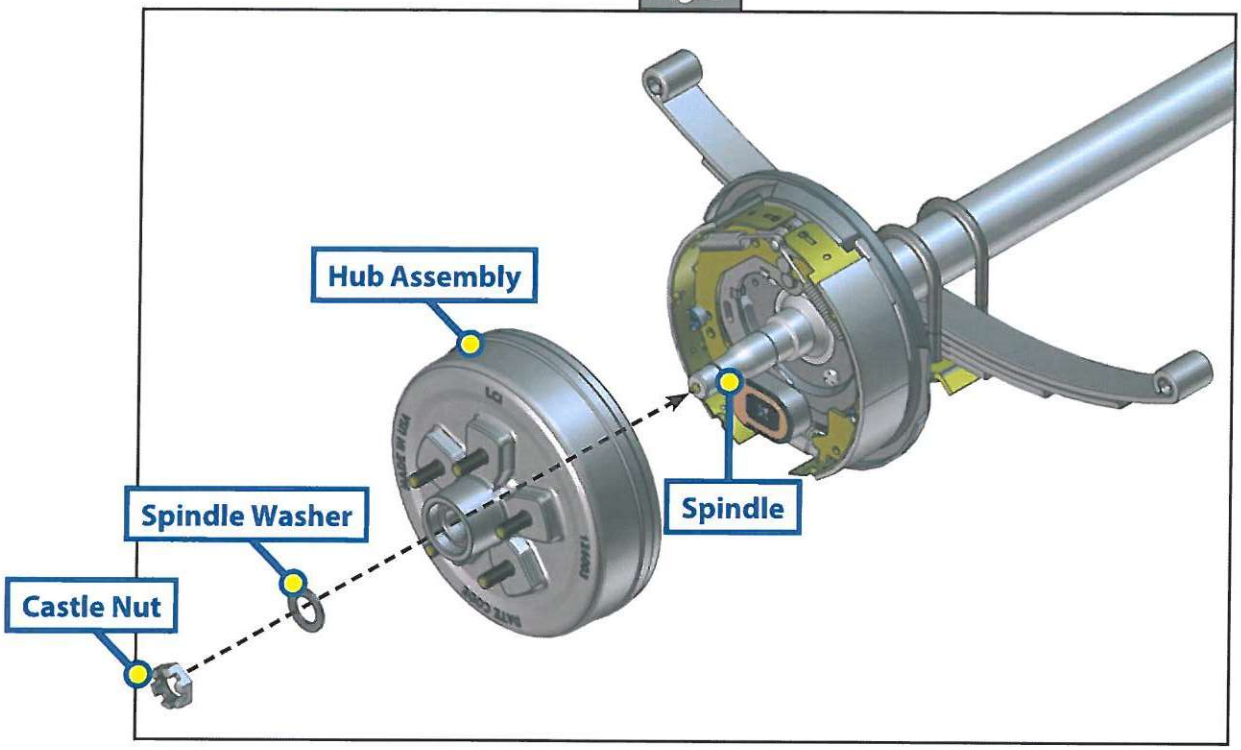

2. Loosen castle nut to back off the torque.
3. Tighten castle nut finger tight until snug.
4. Insert ***NEW*** cotter pin (Fig. 9). If cotter pin does not line up with hole, back castle nut up slightly until pin can be inserted.
5. Bend cotter pin over to lock nut in place (Fig. 10). Nut should be free to move with only the cotter pin keeping it in place.

Fig. 9

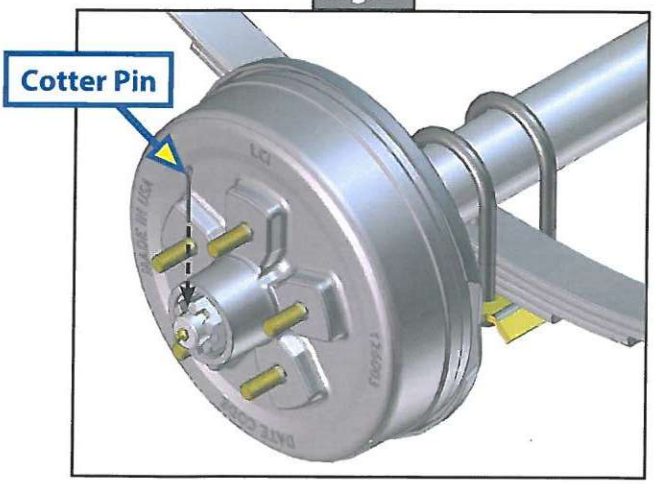

Fig. 10

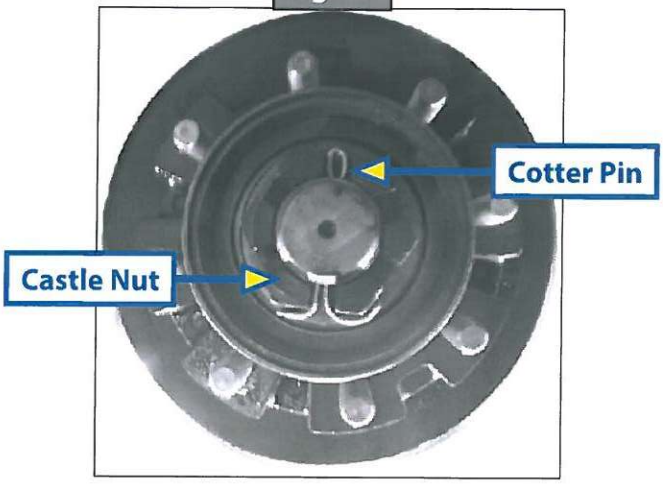

6. Re-install dust cap into the hub assembly (Fig. 11).
7. Re-install the wheel onto the hub assembly (Fig. 12).
8. Re-install the lug nuts onto the hub studs (Fig. 13). See the torque requirements section on the next page.

Fig. 11

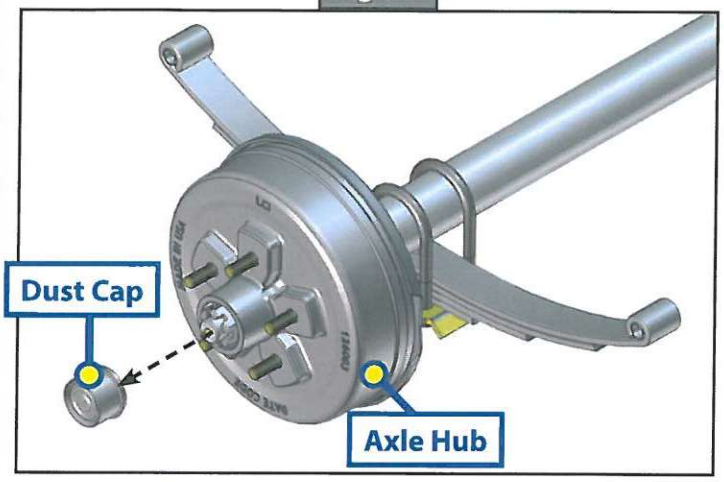

Fig. 12

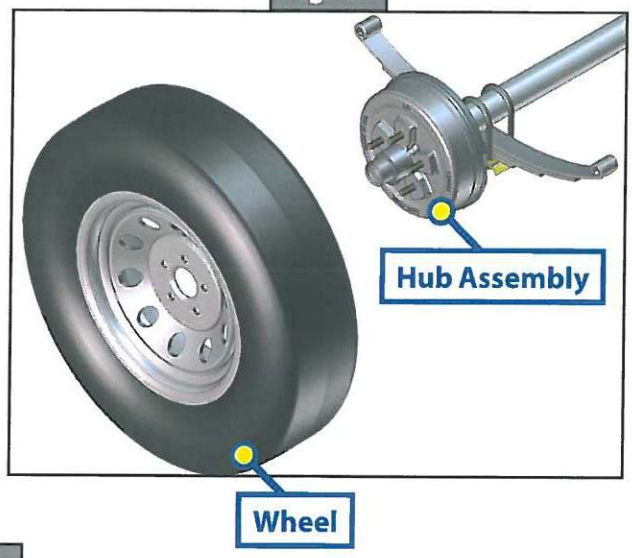

Fig. 13

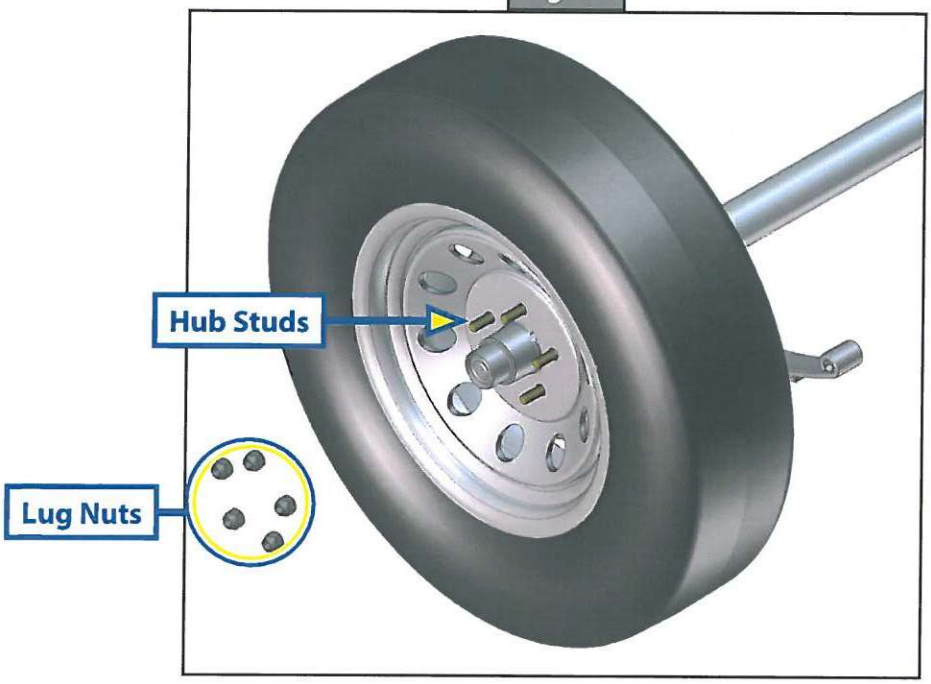

Wheel Torque Requirements

It is extremely important to apply and maintain proper wheel mounting torque on your trailer axle. Torque wrenches assure the proper amount of torque is being applied to a fastener. Use no other method to torque fasteners.

⚠WARNING

Proper and accurate torque must be maintained to prevent wheels from loosening, studs from cracking and/ or breaking or other possible hazardous breakage resulting in death or serious injury.

Be sure to use only the fasteners matched to the cone angle of your wheel (usually 60°or 90°). The proper procedure for attaching your wheels is as follows:

1. Start all bolts or nuts by hand to prevent cross threading.
2. Tighten bolts or nuts in the following sequence (see Wheel Torque Requirement Chart below, Fig. 14).
3. Tightening fasteners should be done in stages. Follow the recommended sequence (Fig. 15). Tighten fasteners per wheel torque requirements chart below.
4. Wheel nuts/bolts should be torqued before first road use and after each wheel removal. Check and re-torque after 10 and 25 miles and again at 50 miles. A periodic check during regular service is recommended.

Fig. 14

Wheel Torque Requirement Chart				
Wheel Size	Stud Size	Torque Sequence		
		1st Stage	2nd Stage	3rd Stage
14"	½"	20-25 ft-lbs	50-60 ft-lbs	90-120 ft-lbs
15"	½"	20-25 ft-lbs	50-60 ft-lbs	90-120 ft-lbs
16"	½"	20-25 ft-lbs	50-60 ft-lbs	90-120 ft-lbs
16.5" x 6.75"	½"	20-25 ft-lbs	50-60 ft-lbs	90-120 ft-lbs
16"	9⁄16"	20-25 ft-lbs	60-70 ft-lbs	120-130 ft-lbs
16.5" x 6.75"	9⁄16"	20-25 ft-lbs	60-70 ft-lbs	120-130 ft-lbs
16" Dual and 17.5" Cone Nut	⅝"	50-60 ft-lbs	100-120 ft-lbs	190-210 ft-lbs
16" Dual and 17.5" Flange Nut	⅝"	50-60 ft-lbs	150-200 ft-lbs	275-325 ft-lbs
14.5" Demount	⅝"	Tighten sequentially to 85-95 ft-lbs		

Fig. 15

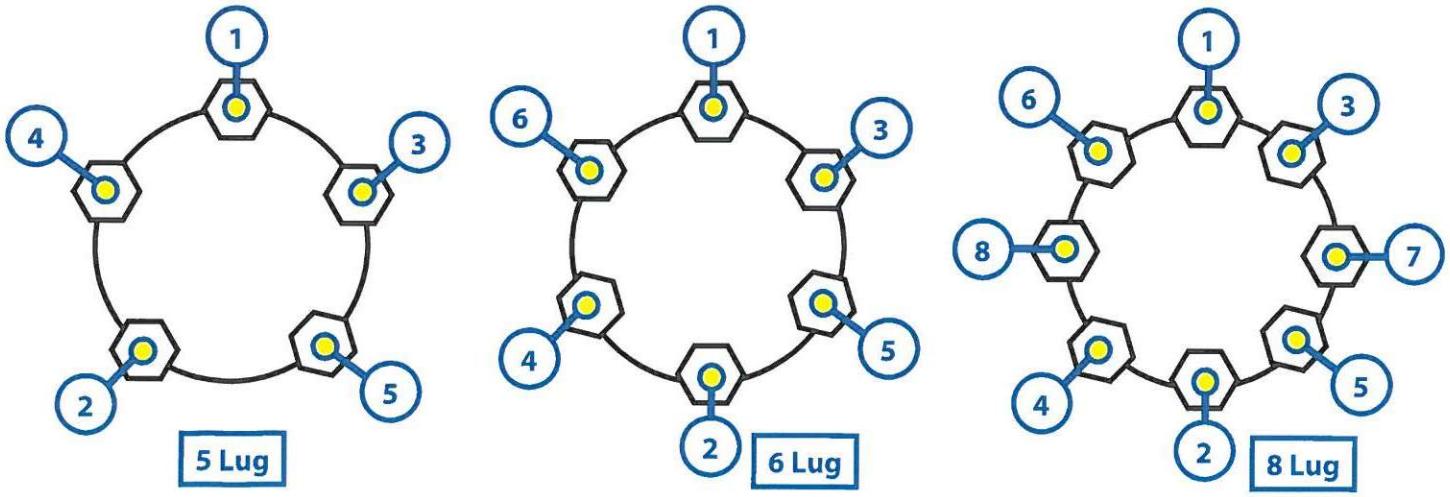

LIPPERT
COMPONENTS®

The contents of this manual are proprietary and copyright protected by Lippert Components, Inc. ("LCI"). LCI prohibits the copying or dissemination of portions of this manual unless prior written consent from an authorized LCI representative has been provided. Any unauthorized use shall void any applicable warranty. The information contained in this manual is subject to change without notice and at the sole discretion of LCI. Revised editions are available for free download from www.lci1.com.

Please recycle all obsolete materials.

For all concerns or questions, please contact
Lippert Components, Inc.
Ph: (574) 537-8900 | Web: www.lci1.com | Email: warranty@lci1.com