**May 20, 2015** 40918-01935 Version 11

# Safety Recall: Driver's Airbag Inflator Can Be Over-Pressurized

**Supersedes 08-093, dated April 14, 2014, to revise the information highlighted in yellow**

## AFFECTED VEHICLES

| Year | Model | Trim | VIN Range |
|---|---|---|---|
| 2001–02 | Accord | ALL | Check the iN VIN status for eligibility |
| 2001–03 | Civic | ALL | Check the iN VIN status for eligibility |
| 2003 | Civic Hybrid | ALL | Check the iN VIN status for eligibility |
| 2002 | CR-V | ALL | Check the iN VIN status for eligibility |
| 2002–03 | Odyssey | ALL | Check the iN VIN status for eligibility |
| 2003 | Pilot | ALL | Check the iN VIN status for eligibility |

## REVISION SUMMARY

A new Civic inflator is available. Refer to PARTS INFORMATION for the new part numbers and to step 10 under the applicable REPAIR PROCEDURE for the new installation procedure.

Here is a link to a short survey. We would like your feedback about how useful you found the included video.

**http://www.hondasurveys.com/se/41783EA538A58686**

## BACKGROUND

A manufacturing error can produce over-pressurization of the driver's (front) airbag inflator during airbag deployment. If an affected airbag deploys, the increased internal pressure may cause the inflator casing to rupture. Metal fragments could pass through the airbag cushion material, possibly causing an injury or fatality to vehicle occupants.

New and different inflators are available. You may receive a different part number than ordered, and the inflator may appear different. As a result, there may be different installation instructions. Make sure you review this service bulletin for installation instructions and details about model applicability. PARTS INFORMATION and REPAIR PROCEDURE were updated to reflect these new parts.

NOTE: Step 9 or 10 under the applicable REPAIR PROCEDURE was changed to include installation procedures for all applicable inflator part numbers.

## CUSTOMER NOTIFICATION

Owners of affected vehicles were sent a notification of this campaign.

Do an iN VIN status inquiry to make sure the vehicle is shown as eligible.

Some vehicles affected by this campaign may be in your used vehicle inventory. These vehicles must be repaired before they are sold.

Should your dealership sell an unrepaired vehicle that subsequently causes injury or damage because of the recalled item, the dealership will be solely responsible to the damaged party, and will be required to defend and indemnify American Honda for any resulting claims. To see if a vehicle in inventory is affected by this recall, do a VIN status inquiry before selling it.

**CUSTOMER INFORMATION:** The information in this bulletin is intended for use only by skilled technicians who have the proper tools, equipment, and training to correctly and safely maintain your vehicle. These procedures should not be attempted by "do-it-yourselfers," and you should not assume this bulletin applies to your vehicle, or that your vehicle has the condition described. To determine whether this information applies, contact an authorized Honda automobile dealer.

© 2015 American Honda Motor Co., Inc. – All Rights Reserved 

## CORRECTIVE ACTION

Install a driver's airbag inflator kit, then return the original, **undeployed** inflator as directed.

NOTE: **For Civic models only**, inspect the airbag and, if necessary, replace the driver's airbag inflator, then return the original, undeployed inflator as directed.

## PARTS INFORMATION

NOTE: Always use new Torx bolts to reinstall the airbags. The new Torx bolts are coated with threadlock to make sure they do not come loose.

| Part Name | Order Part Number | You may receive any of the following | Quantity |
|---|---|---|---|
| 2001–02 Accord Driver's Airbag Inflator Kit | 04770-S5A-305 | 04770-S5A-305<br>04770-S5A-405 | 1 |
| 2001–03 Civic (includes Hybrid) Driver's Airbag Inflator Kit | 04770-S5A-408 | 04770-S5A-408 | 1 |
| 2002 CR-V Driver's Airbag Inflator Kit | 04770-S9A-306 | 04770-S9A-306<br>04770-S9A-405<br>04770-S9A-409 | 1 |
| 2002–03 Odyssey Driver's Airbag Inflator Kit | 04770-S5A-305 | 04770-S5A-305<br>04770-S5A-405 | 1 |
| 2003 Pilot Driver's Airbag Inflator Kit | 04770-S9A-306 | 04770-S9A-306<br>04770-S9A-405<br>04770-S9A-409 | 1 |
| Torx Bolts (For reinstalling Autoliv airbags only) | 90134-S04-A81 | N/A | 2 |

NOTE:

- The inflator kit box must be used to return the old inflator to its supplier, ideally within 48 hours of the repair. Be careful not to damage the inflator kit box.
- If the defective, undeployed inflator is not returned, the warranty claim for that vehicle will be charged back to your dealership.
- Follow the shipping instructions supplied with the inflator kit. If you have any questions about shipping, call Warranty Parts Inspection (WPI) at **937-642-2737**.

## WARRANTY CLAIM INFORMATION

NOTE:

- **Use the Autoliv claim for removing and reinstalling Autoliv airbags only**. Do not use it to claim any labor on Takata airbags.
- To avoid a warranty claim being charged back to your dealership, the defective, undeployed inflator must be returned to its supplier. Follow the shipping instructions supplied with the inflator kit. If you have any questions about shipping, call Warranty Parts Inspection (WPI) at **937-642-2737**.
- Template IDs cannot be used because there are different inflator part numbers available and it would be too complex to have a template ID for each part number.
- The **replacement inflator part number and serial number** are printed on the label that should be attached to the R.O.
- To avoid non-payment of warranty claims, the new airbag inflator part number must be included in each claim and the serial number must be entered into the Diagnostic Trouble Codes field. For more information, refer to step 2 of REPAIR PROCEDURE.
- The serial number is encoded into the bar code printed on the label. If your dealership uses a scanner, you can scan the serial number into the claim.

| Operation Number | Description | Flat Rate Time | Defect Code | Symptom Code | Failed Part Number |
|---|---|---|---|---|---|
| 7521F4 | Replace the driver's airbag inflator. | 0.5 hr | 5SZ00 | Q9600 | 06770-S84-A11ZA |
| 7525B0 | Remove and reinstall the Autoliv airbag. | 0.3 hr | 5SZ00 | Q9600 | 06770-S84-A11ZA |

Skill Level: Repair Technician

## REPAIR PROCEDURE – ACCORD ONLY

NOTE:

- Be careful not to damage any parts when replacing the inflator, and **follow the procedure exactly**.
- If, before removing the airbag, you suspect that it may be the incorrect airbag for the vehicle or a counterfeit, **do not remove the airbag**. Contact your DPSM for assistance.
- Do not open the inflator kit until you have confirmed a Takata inflator is installed in the vehicle because if you have to return the inflator, the kit must be unopened.

1. Remove the driver's airbag.
2. Peel the label located inside the inflator box from its backing and attach it to the R.O. For the warranty claim to be paid, the **replacement inflator part number that you received** must be on the warranty claim and your warranty clerk must enter the serial number in the Diagnostic Trouble Codes field.

   NOTE:

   - The replacement part number is printed on the top part of the label and the serial number is printed on the bottom. **Make sure you attach the label to the R.O. and give it to the warranty clerk**.
   - There may also be a colored sticker located in the kit, ignore it because it is not used.
   - Not all inflator kits have a label included. In those cases, write the serial number and part number from the side of the inflator box on the R.O. The part number always starts with 047.

***INFLATOR PARTS BOX***

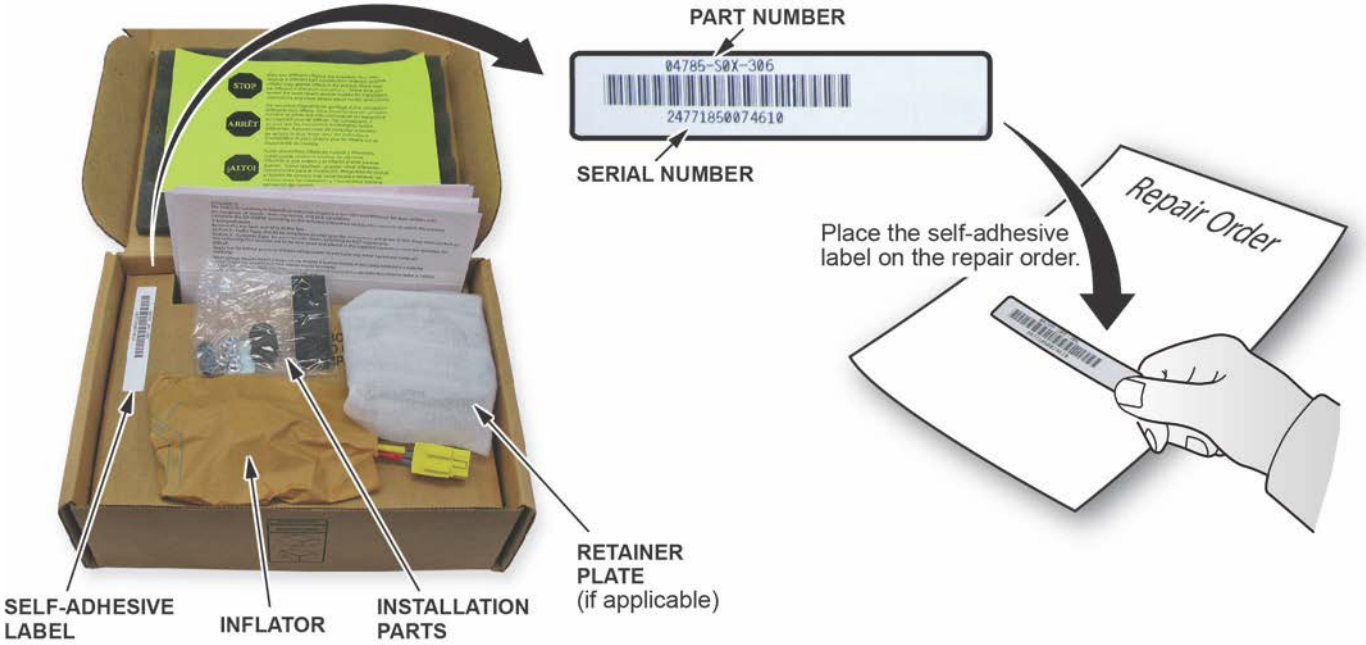

3. Place the airbag, face down, on a clean shop towel.
4. Visually inspect the airbag and the inflator for any unusual writing or markings.
   - If there is nothing unusual about the airbag or the inflator, go to step 5.
   - If there are any unusual markings, like an incorrect label or a model year written in marker, the airbag and inflator may not be the correct airbag and/or inflator for the vehicle or it may be a counterfeit part. For more information about counterfeit airbags, you can refer to *safercar.gov*, enter keywords **MANAGING COUNTERFEIT**, and select **Recommended Dealer Guidance for Managing Counterfeit Air Bags** from the list. **If you suspect that the airbag or inflator is counterfeit, do not continue this procedure**. Contact your DPSM for assistance.

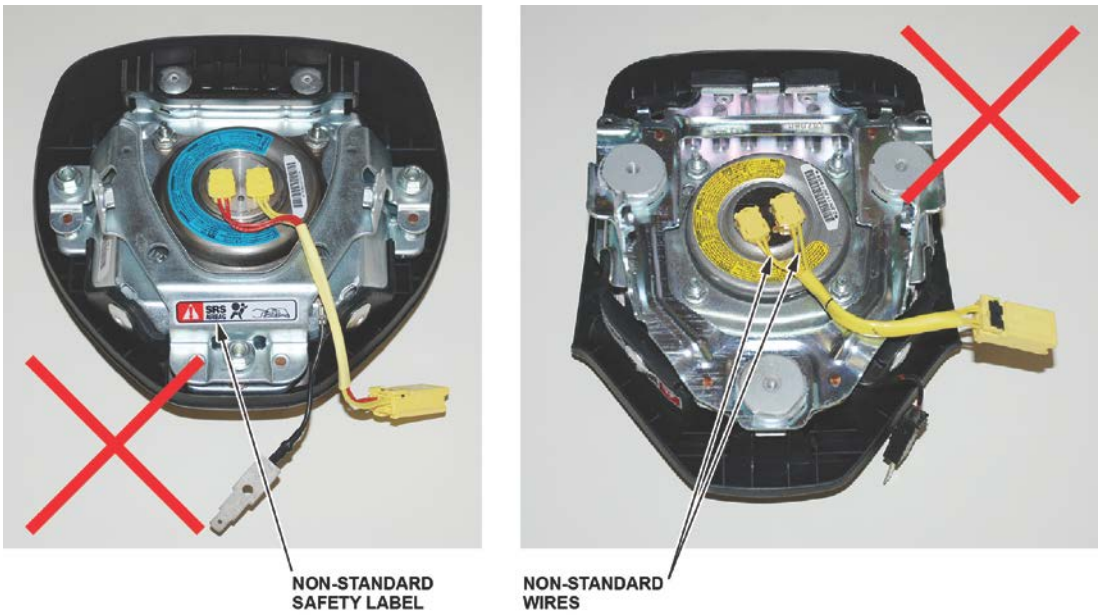


5. Remove the four horn plate mounting bolts, the mounting bolt felt washers, and the horn plate. The felt washers will not be reused.

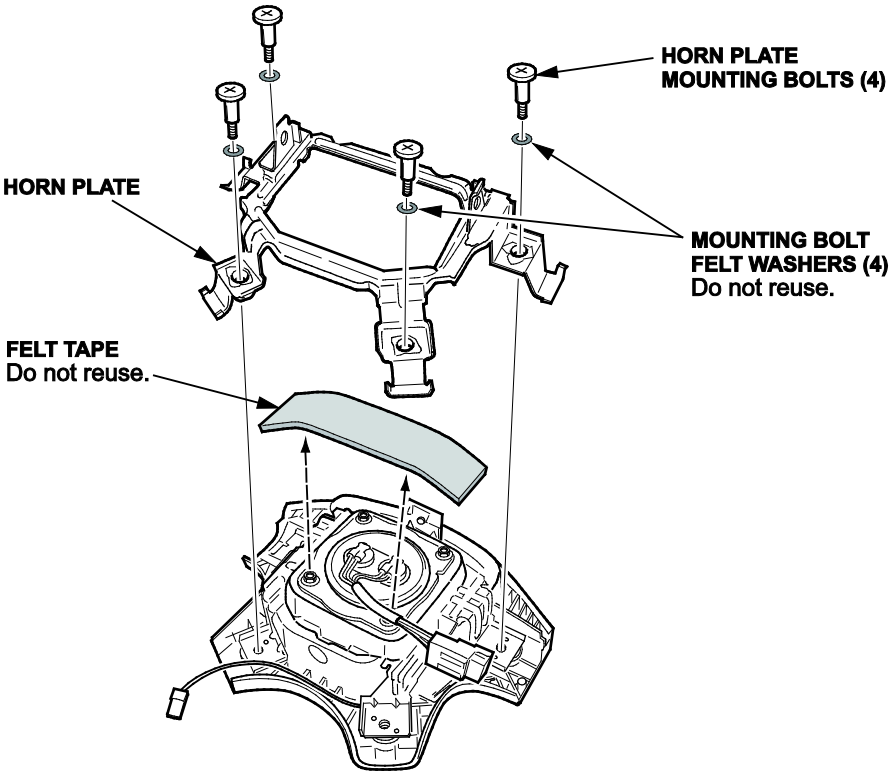

6. Remove and discard the felt tape covering the lower two inflator locknuts.
7. Using needle-nose vise grips or a 3/8 in. 6-point socket, remove the four locknuts from the inflator. The locknuts will not be reused.

   NOTE: Do not remove the inflator from the airbag until you complete step 8.

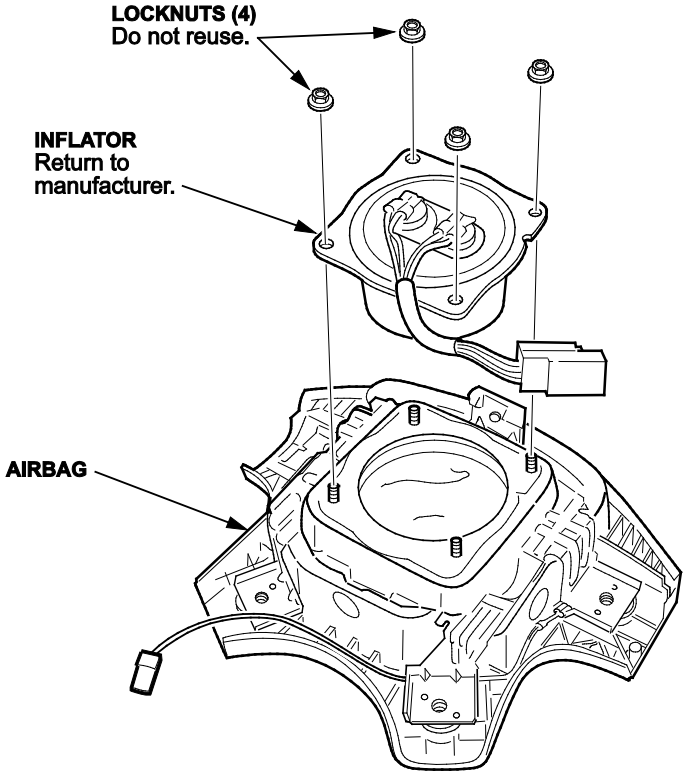


8. Use shop air to clean any debris that may be on the inflator, then remove the inflator from the airbag.

   NOTE:
   - Do not allow any debris to enter the inflator opening in the airbag.
   - **Do not deploy the inflator**. The inflator must be returned to its supplier in the box the new inflator came in. Follow the shipping instructions supplied with the inflator kit. If you have any questions about shipping, call Warranty Parts Inspection (WPI) at **937-642-2737**.
9. Turn over the airbag (inflator side down), and shake it to remove any debris from the inflator opening.

10. Install the new inflator in the airbag.

NOTE: There may be some minor surface rust or corrosion on the new inflator; this is OK.

Click on the image below for a short video about the different variations of the driver's and front passenger's replacement inflators involved with the recalls related to Takata inflators. While both the driver's and front passengers inflators are shown in the video, this is informational only. Replace inflators only as directed by the iN VIN status inquiry.

**Check your part number against the ones listed for each installation procedure. Use the correct installation procedure for the part you received**.

**Part Number**

04770-S5A-305 Refer to **Driver's Inflator Type 1** in the video.

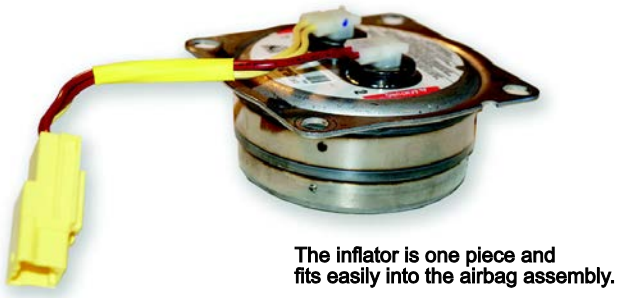


- Insert the inflator into the opening.

NOTE: Make sure the inflator wires are positioned toward the bottom of the airbag. If you install the inflator incorrectly, you may not be able to reconnect the SRS airbag harness.

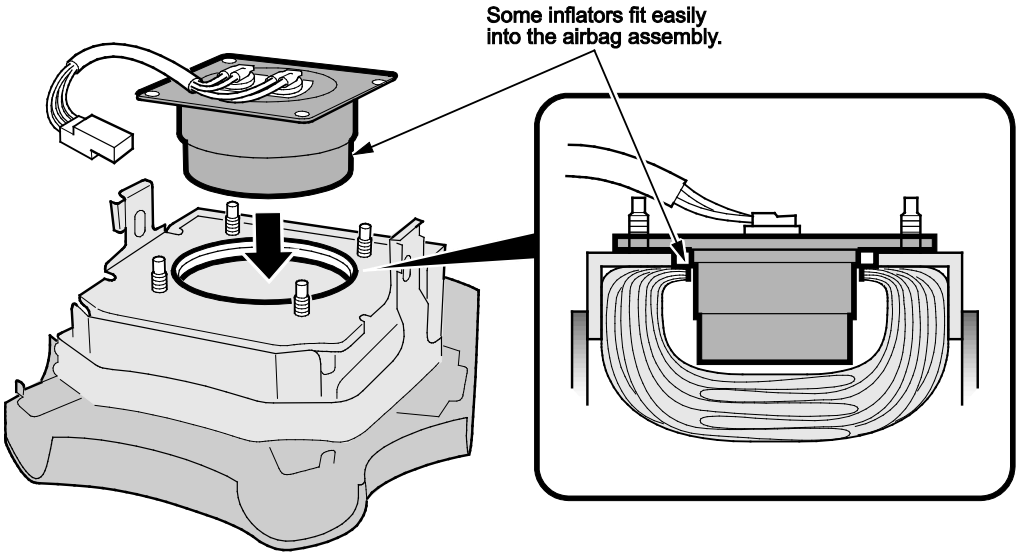

**Check your part number against the ones listed for each installation procedure. Use the correct installation procedure for the part you received**

**Part Number**

04770-S5A-405 Refer to **Driver's Inflator Type 2** in the video.

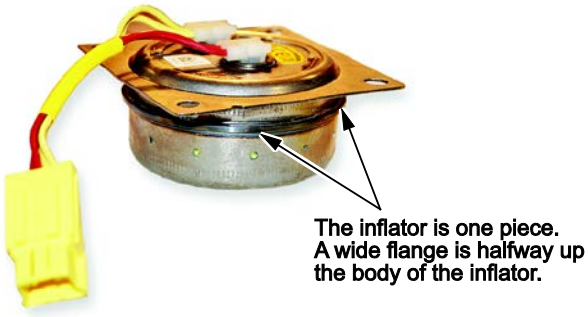


- Insert the airbag inflator into the opening. Do not force it into the airbag module.

NOTE: Make sure the inflator wires are positioned toward the bottom of the airbag. If you install the inflator incorrectly, you may not be able to reconnect the SRS airbag harness.

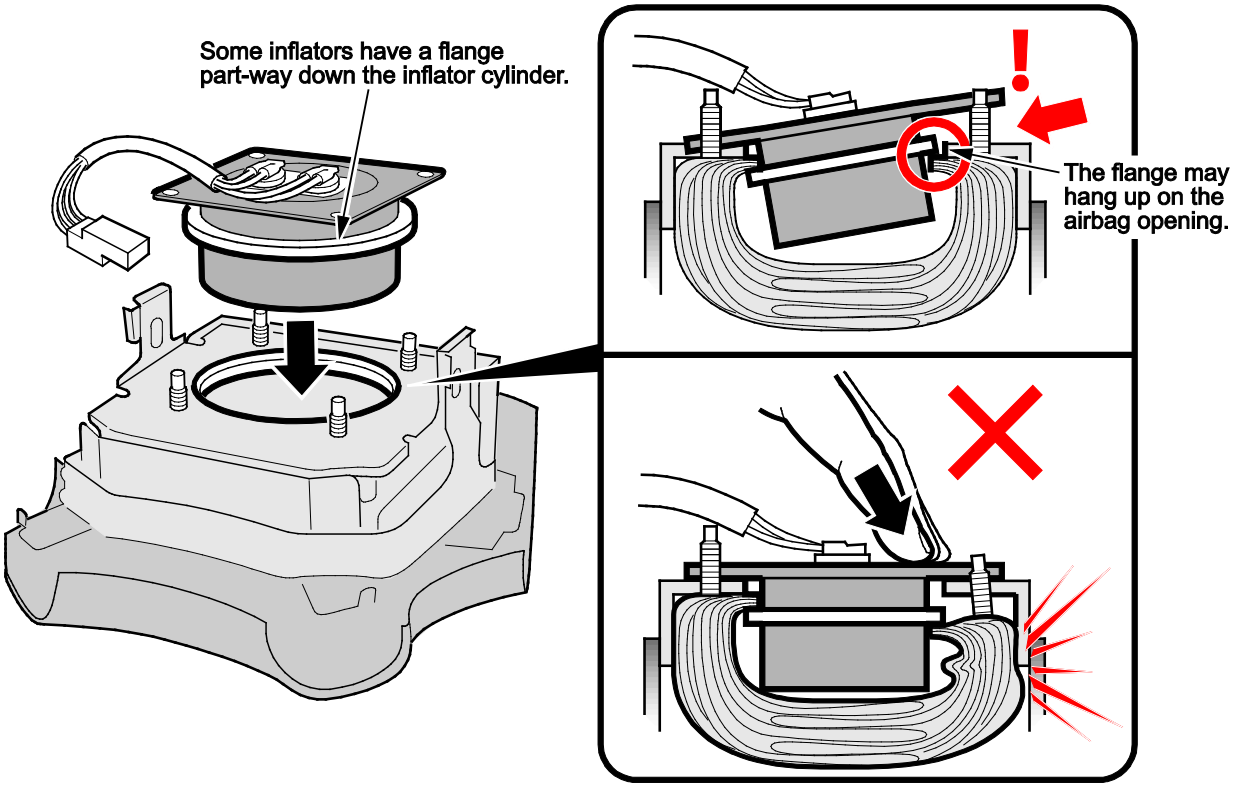

- Using a pair of pliers, gently pull up on each stud up while pushing the inflator module down until the airbag is properly seated within the airbag module.

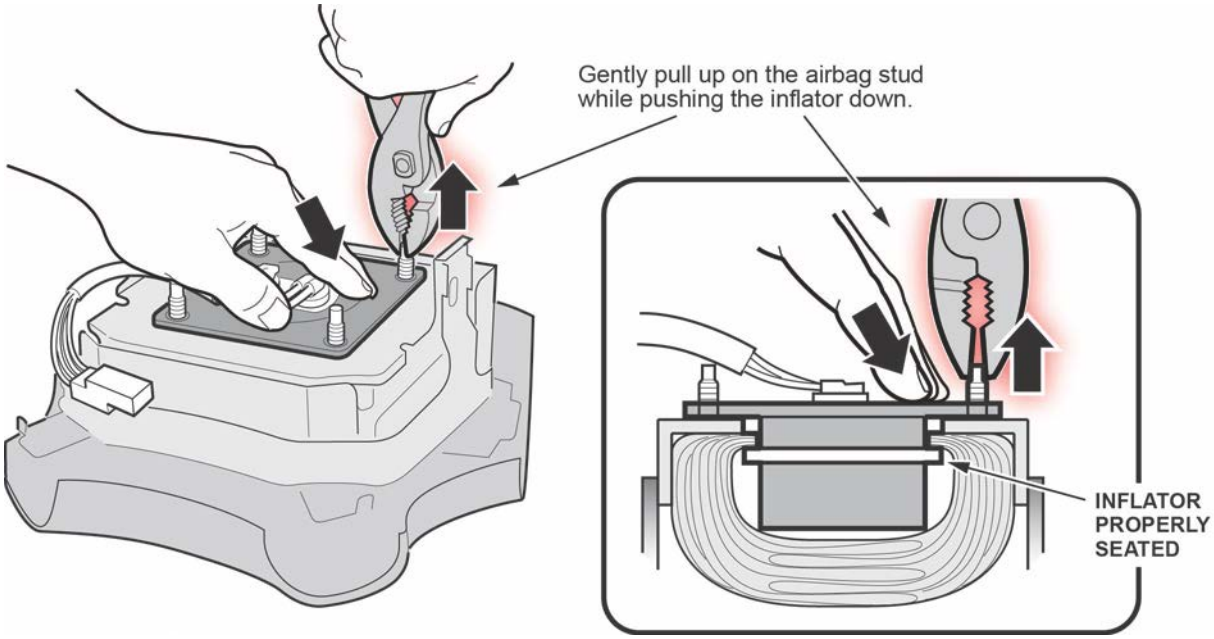


11. Install and torque the new locknuts to **3.9 N·m (2.8 lb-ft, 34 lb-in)**.
12. Cover the lower two inflator locknuts with new felt tape.
13. Reinstall the horn plate with new felt washers on its mounting bolts. Torque the mounting bolts to **3.9 N·m (2.5 lb-ft, 30 lb-in)**, then make sure the horn plate moves freely.
14. Reinstall the driver's airbag using new Torx bolts. Torque the bolts to **9.8 N·m (7.2 lb-ft)**.
15. Give your warranty clerk the R.O. that includes the inflator serial number and replacement part number. For the warranty claim to be paid, the **replacement inflator part number** must be on the warranty claim and your warranty clerk must enter the serial number in the Diagnostic Trouble Codes field.

## REPAIR PROCEDURE – CIVIC, CIVIC HYBRID, CR-V, ODYSSEY, AND PILOT

NOTE:

- Be careful not to damage any parts when replacing the inflator, and **follow the procedure exactly**.
- If, before removing the airbag, you suspect that it may be the incorrect airbag for the vehicle or a counterfeit, **do not remove the airbag**. Contact your DPSM for assistance.
- Do not open the inflator kit until you have confirmed a Takata inflator is installed in the vehicle because if you have to return the inflator, the kit must be unopened.
- If the vehicle you are working on has an Autoliv airbag and inflator, **do not disassemble the airbag** because the inflator cannot be reinstalled, and you will have to replace the airbag module.

1. Remove the driver's airbag.
2. Peel the label located inside the inflator box from its backing and attach it to the R.O. For the warranty claim to be paid, the **replacement inflator part number that you received** must be on the warranty claim and your warranty clerk must enter the serial number in the Diagnostic Trouble Codes field.

   NOTE:

   - The replacement part number is printed on the top part of the label and the serial number is printed on the bottom. **Make sure you attach the label to the R.O. and give it to the warranty clerk**.
   - There may also be a colored sticker located in the kit, ignore it because it is not used.
   - Not all inflator kits have a label included. In those cases, write the serial number and part number from the side of the inflator box on the R.O. The part number always starts with 047.

   ***INFLATOR PARTS BOX***

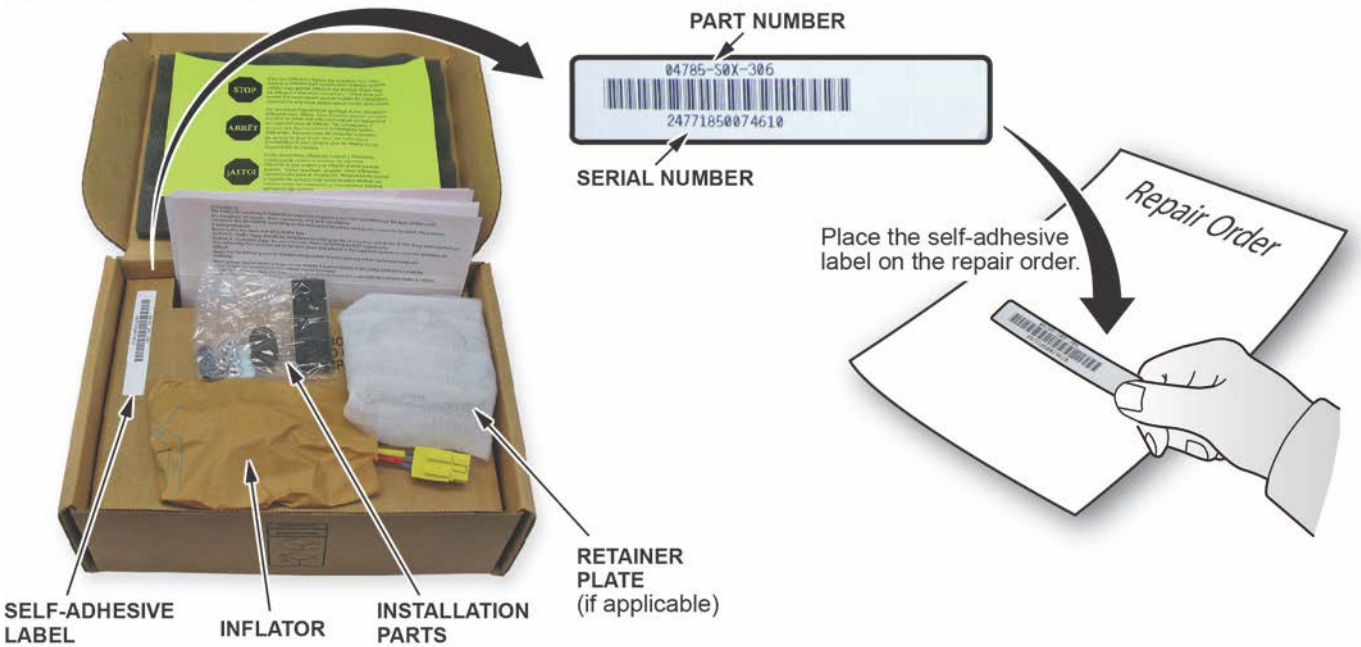


3. Place the airbag, face down, on a clean shop towel.

4. Visually inspect the airbag and the inflator for any unusual writing or markings.
   - If there is nothing unusual about the airbag or the inflator, go to step 5.
   - If there are any unusual markings, like an incorrect label or a model year written in marker, the airbag and inflator may not be the correct airbag and/or inflator for the vehicle or it may be a counterfeit part. For more information about counterfeit airbags, you can refer to *safercar.gov*, enter keywords **MANAGING COUNTERFEIT**, and select **Recommended Dealer Guidance for Managing Counterfeit Air Bags** from the list. **If you suspect that the airbag or inflator is counterfeit, do not continue this procedure**. Contact your DPSM for assistance.

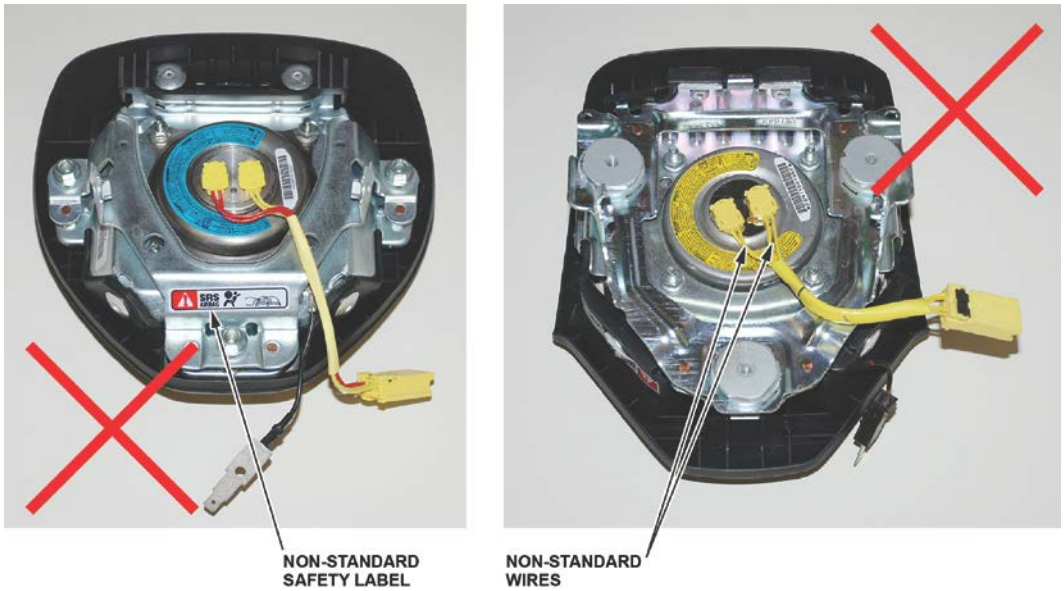


5. ***Civic only*** - Determine if the airbag is made by Autoliv or Takata by comparing the inflators to those in the images below.

   NOTE: The Autoliv serial number label is different from the Takata label; the Autoliv has 11 characters, the Takata has 9.
   - If the airbag is made by Autoliv, the airbag is OK. Reinstall the airbag using new Torx bolts. Torque the bolts to **9.8 N·m (7.2 lb-ft)**. If you already received a replacement inflator, return the unopened kit to American Honda.
   - If the airbag is made by Takata, go to step 6.

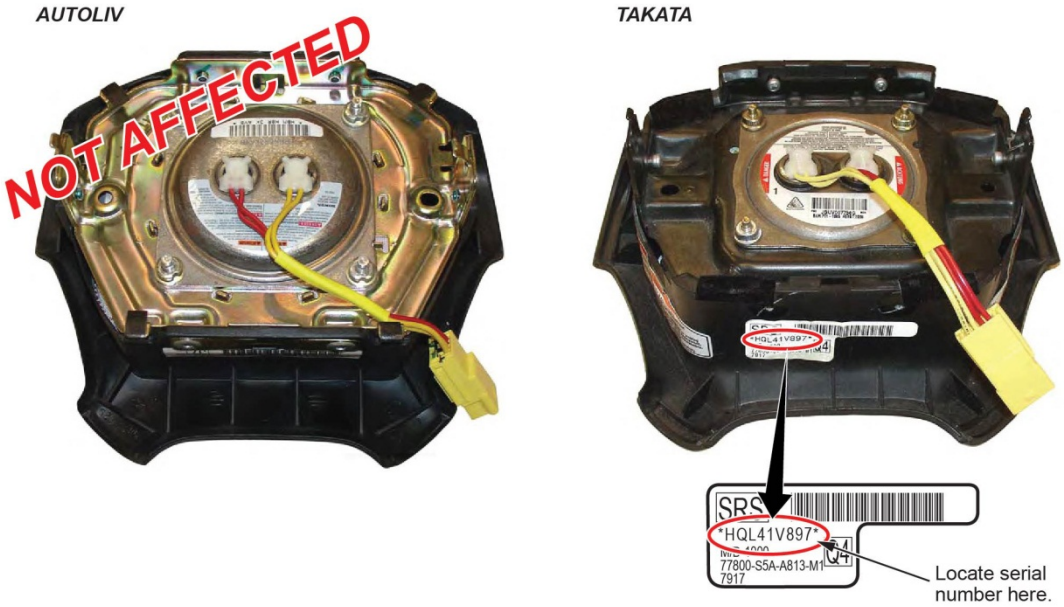

6. Using needle-nose vise grips or a 3/8 in. 6-point socket, remove the four locknuts from the inflator. The locknuts will not be reused.

   NOTE: Do not remove the inflator from the airbag until you complete step 7.

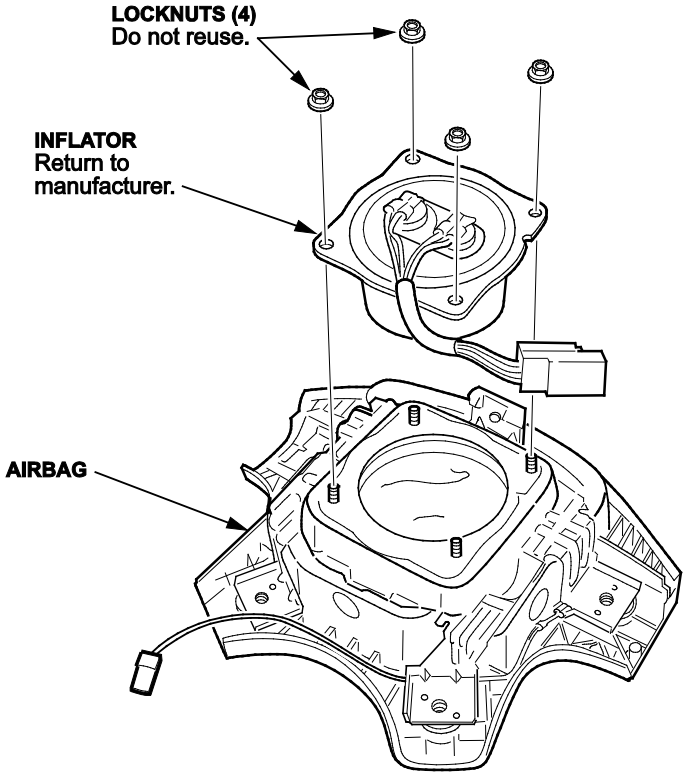


7. Use shop air to clean any debris that may be on the inflator, then remove the inflator from the airbag.

   NOTE:

   - Do not allow any debris to enter the inflator opening in the airbag.
   - **Do not deploy the inflator**. The inflator must be returned to its supplier in the box the new inflator came in. Follow the shipping instructions supplied with the inflator kit. If you have any questions about shipping, call Warranty Parts Inspection (WPI) at **937-642-2737**.

8. Turn over the airbag (inflator side down), and shake it to remove any debris from the inflator opening.

9. Install the new inflator in the airbag.

   NOTE: There may be some minor surface rust or corrosion on the new inflator; this is OK.
   Click on the image below for a short video about the different inflators.

**Check your part number against the ones listed for each installation procedure. Use the correct installation procedure for the part you received.**

**Part Number**

04770-S5A-305 Refer to **Driver's Inflator Type 1** in the video.

04770-S9A-306

- Insert the inflator into the opening.

NOTE: Make sure the inflator wires are positioned toward the bottom of the airbag. If you install the inflator incorrectly, you may not be able to reconnect the SRS airbag harness.

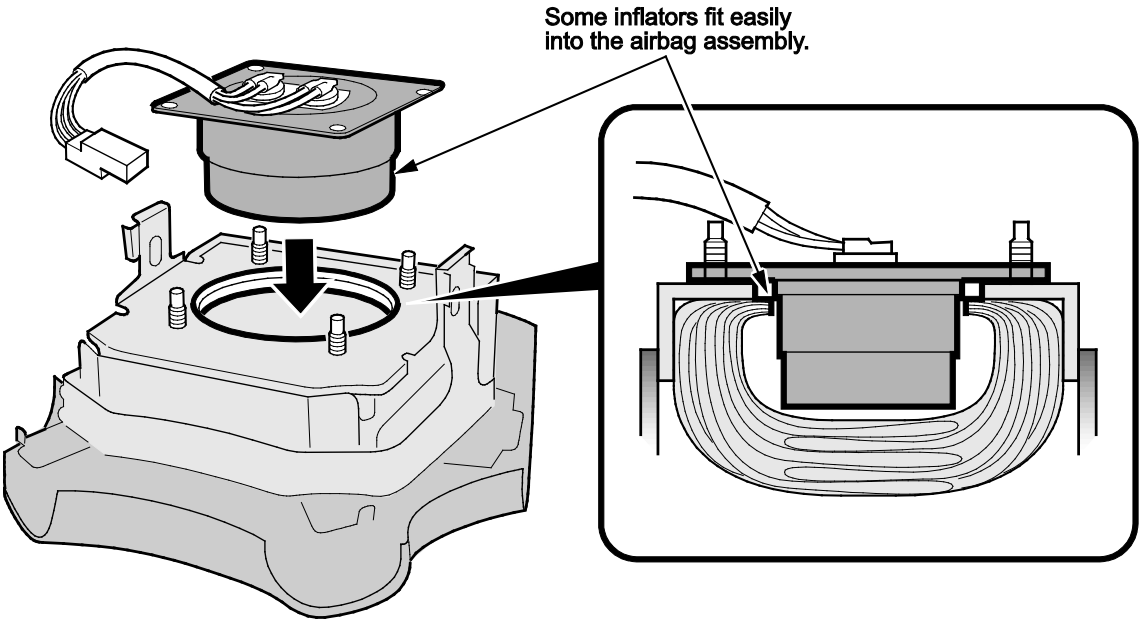

**Check your part number against the ones listed for each installation procedure. Use the correct installation procedure for the part you received.**

**Part Number**

04770-S5A-405 Refer to **Driver's Inflator Type 2** in the video.

04770-S9A-405

- Insert the airbag inflator into the opening. Do not force it into the airbag module.

NOTE: Make sure the inflator wires are positioned toward the bottom of the airbag. If you install the inflator incorrectly, you may not be able to reconnect the SRS airbag harness.

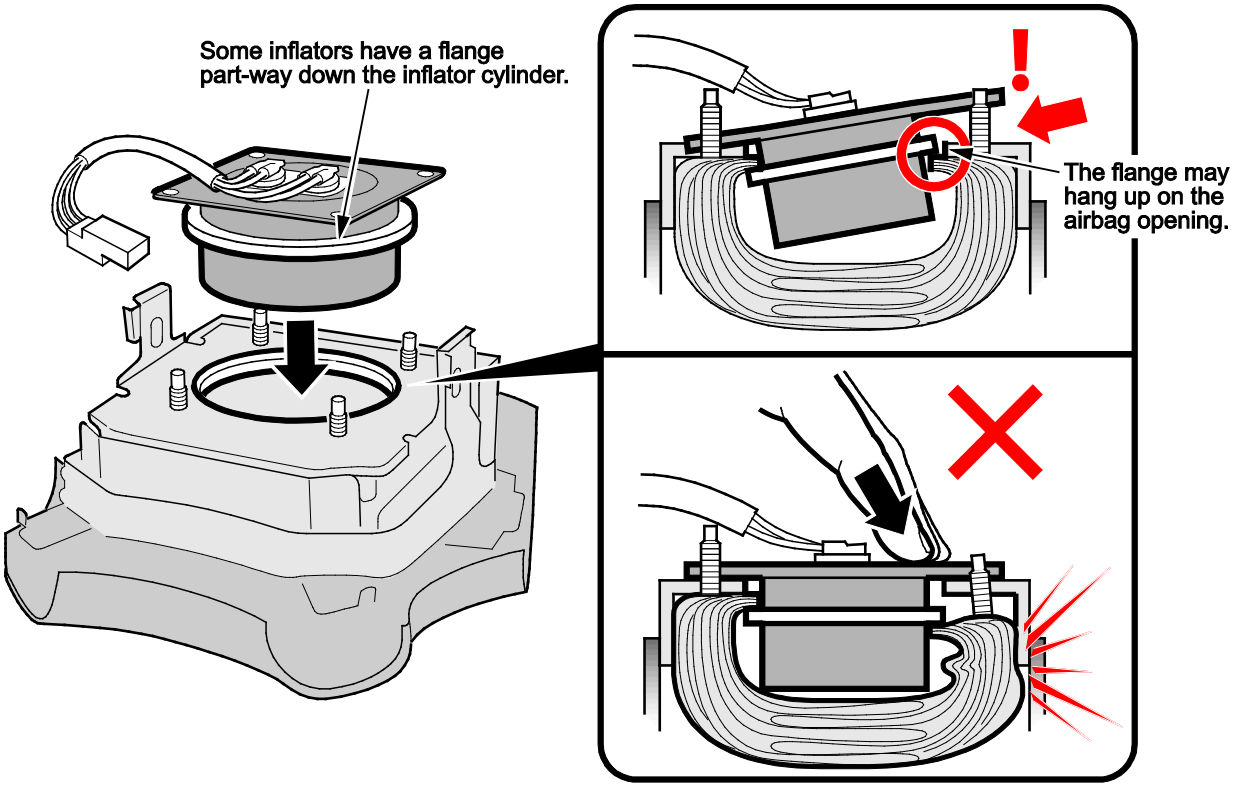


- Using a pair of pliers, gently pull up on each stud up while pushing the inflator module down until the airbag is properly seated within the airbag module.

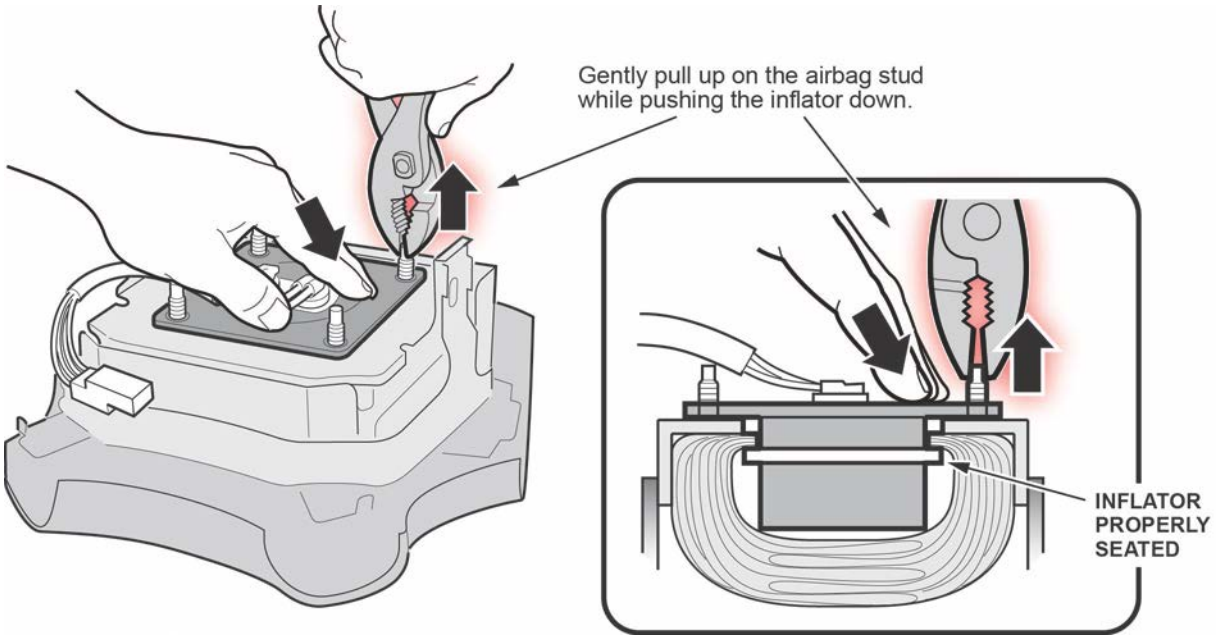

**Check your part number against the ones listed for each installation procedure. Use the correct installation procedure for the part you received**.

**Part Number**

04770-S5A-408 Refer to **Driver's Inflator Type 3** in the video.

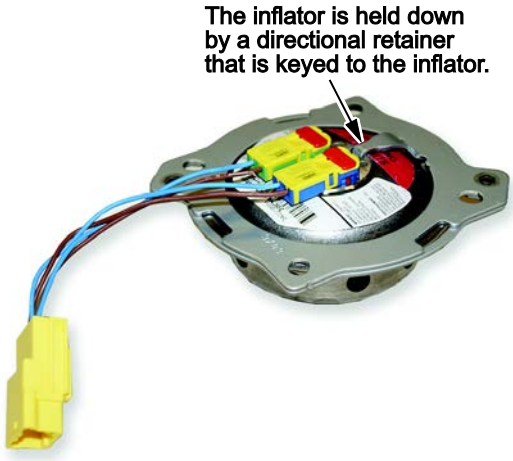


- Place the inflator into the opening with the inflator harness toward the bottom of the airbag.

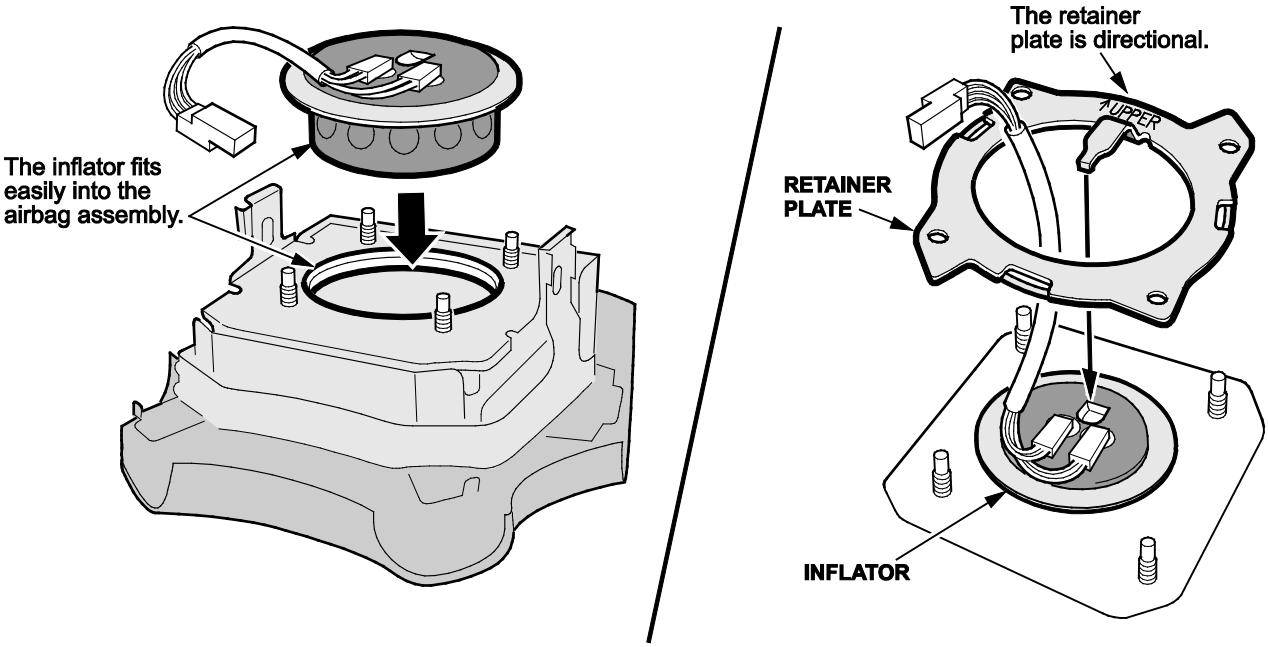


- Install the bracket onto the studs. Make sure the locator tab fits into the locator hole as shown.
  NOTE: Make sure the harness comes out through the center opening. Do not install the bracket over the harness wires.

**Check your part number against the ones listed for each installation procedure. Use the correct installation procedure for the part you received**.

**Part Number**

04770-S9A-409 Refer to **Driver's Inflator Type 4** in the video.

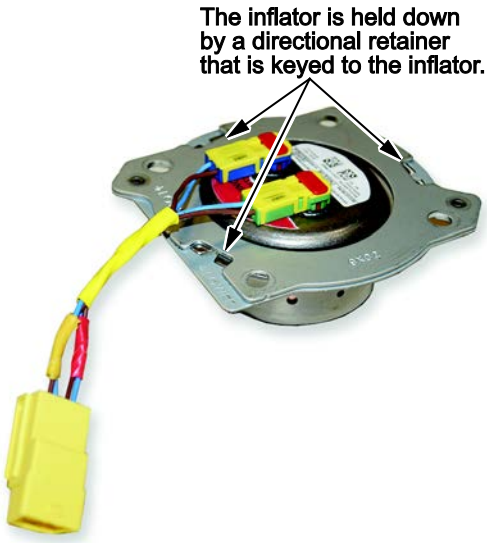


- Place the inflator into the opening with the inflator harness toward the bottom of the airbag.

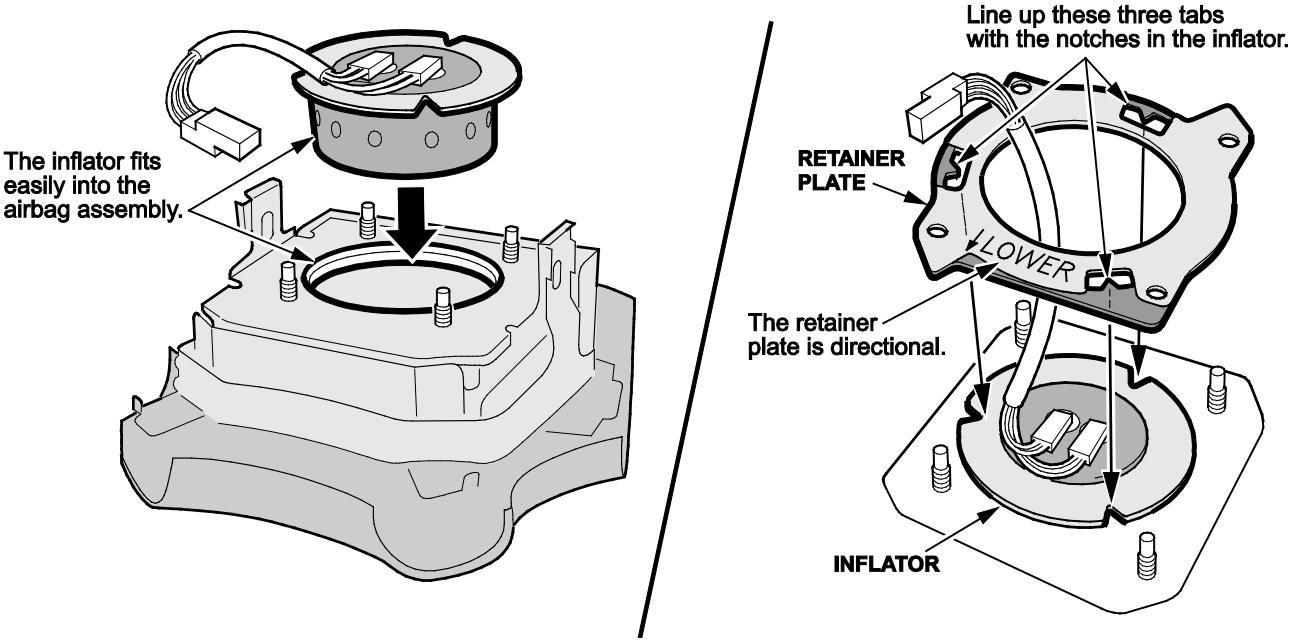


- Install the bracket onto the studs with the stamp **LOWER** at the bottom of the airbag.
- Make sure the three tabs and notches are properly aligned.

NOTE:

- The tabs and notches are designed to align in one direction only. If the tabs and notches are not aligned, the inflator and bracket are not installed correctly.
- Make sure the harness comes out through the center opening. Do not install the bracket over the harness wires.

10. Install and torque the new locknuts to **3.9 N·m (2.8 lb-ft, 34 lb-in)**.
11. Reinstall the driver's airbag using new Torx bolts. Torque the bolts to **9.8 N·m (7.2 lb-ft)**.
12. Give your warranty clerk the R.O. that includes the inflator serial number and replacement part number. For the warranty claim to be paid, the **replacement inflator part number** must be on the warranty claim and your warranty clerk must enter the serial number in the Diagnostic Trouble Codes field.

END