April 24, 2015 42306-01891 Version 10

Safety Recall: Driver's Airbag Inflator Can Be Over-Pressurized

Supersedes 09-033, dated April 14, 2015; to revise the information highlighted in yellow

AFFECTED VEHICLES

Year	Model	Trim	VIN Range
2003	3.2CL	ALL	Check the iN VIN status for eligibility
2002–03	3.2TL	ALL	Check the iN VIN status for eligibility

REVISION SUMMARY

A label that has the part number and serial number of the inflator may be included in the airbag inflator kit to make tracking this information easier.

BACKGROUND

A manufacturing error can produce over-pressurization of the driver's (front) airbag inflator during airbag deployment. If an affected airbag deploys, the increased internal pressure may cause the inflator casing to rupture. Metal fragments could pass through the airbag cushion material, possibly causing an injury or fatality to vehicle occupants.

New and different inflators are available. You may receive a different part number than ordered, and the inflator may appear different. As a result, there may be different installation instructions. Make sure you review this service bulletin for installation instructions and details about model applicability. PARTS INFORMATION and REPAIR PROCEDURE were updated to reflect these new parts.

NOTE: Step 9 under REPAIR PROCEDURE was changed to include installation procedures for all applicable inflator part numbers.

CLIENT NOTIFICATION

All owners of affected vehicles will be sent a notification of this campaign.

Do an **iN VIN status inquiry** to make sure the vehicle is shown as eligible.

Some vehicles affected by this campaign may be in your used vehicle inventory. These vehicles must be repaired before they are sold. Should a dealership sell an unrepaired vehicle that subsequently causes an injury or damage because of the recalled item, the dealership will be solely responsible to the damaged party and will be required to defend and indemnify American Honda for any resulting claims. To see if a vehicle in inventory is affected by this campaign, do a VIN status inquiry before selling it.

CORRECTIVE ACTION

Install a driver's airbag inflator kit, then return the original, **undeployed** inflator as directed.

CLIENT INFORMATION: The information in this bulletin is intended for use only by skilled technicians who have the proper tools, equipment, and training to correctly and safely maintain your vehicle. These procedures should not be attempted by "do-it-yourselfers," and you should not assume this bulletin applies to your vehicle, or that your vehicle has the condition described. To determine whether this information applies, contact an authorized Acura automobile dealer.

© 2015 American Honda Motor Co., Inc. – All Rights Reserved

PARTS INFORMATION

NOTE: Always use new Torx bolts to reinstall the airbags. The new Torx bolts are coated with threadlock to make sure they do not come loose.

Part Name	Order Part Number	You may receive any of the following	Quantity
2003 3.2CL Driver's Airbag Inflator Kit	04770-S5A-305	04770-S5A-305 04770-S5A-405	1
2002–03 3.2TL Driver's Airbag Inflator Kit	04770-S5A-305	04770-S5A-305 04770-S5A-405	1

NOTE:

- The inflator kit box must be used to return the recalled inflator to its supplier**, ideally within 48 hours of the repair**. Be careful not to damage the inflator kit box.
- If the recalled, undeployed inflator is not returned, the warranty claim for that vehicle will be charged back to your dealership.
- Follow the shipping instructions supplied with the inflator kit. If you have any questions about shipping, call Warranty Parts Inspection (WPI) at **937-642-2737**.

WARRANTY CLAIM INFORMATION

NOTE:

- To avoid a warranty claim being charged back to your dealership, the defective, undeployed inflator must be returned to its supplier. Follow the shipping instructions supplied with the inflator kit. If you have any questions about shipping, call Warranty Parts Inspection (WPI) at **937-642-2737**.
- Template IDs cannot be used because there are different inflator part numbers available and it would be too complex to have a template ID for each part number.
- The **replacement inflator part number and serial number** are printed on the label that should be attached to the R.O.
- To avoid non-payment of warranty claims, the new airbag inflator part number must be included in each claim and the serial number must be entered into the Diagnostic Trouble Codes field. For more information, refer to step 2 of REPAIR PROCEDURE.
- The serial number is encoded into the bar code printed on the label. If your dealership uses a scanner, you can scan the serial number into the claim.

Replacing the front passenger's airbag inflator

Year/Model	Operation Number	Replacement Part Number	Flat Rate Time	Defect Code	Symptom Code	Template ID	Failed Part Number
2003 3.2CL	7521F4	04770-S5A-305	0.5 hr	5SZ00	R1300	09-033N	06770-S84-A11ZA
	7521F4	04770-S5A-405	0.5 hr	5SZ00	R1300	09-033P	06770-S84-A11ZA
2002–03 3.2TL	7521F4	04770-S5A-305	0.5 hr	5SZ00	R1300	09-033Q	06770-S84-A11ZA
	7521F4	04770-S5A-405	0.5 hr	5SZ00	R1300	09-033R	06770-S84-A11ZA

REPAIR PROCEDURE

NOTE:

- Be careful not to damage any parts when replacing the inflator, and **follow the procedure exactly**.
- If, before removing the airbag, you suspect that it may be the incorrect airbag for the vehicle or a counterfeit, **do not remove the airbag**. Contact your DPSM for assistance.

1. Remove the driver's airbag.
2. Peel the label located inside the inflator box from its backing and attach it to the R.O. For the warranty claim to be paid, the **replacement inflator part number that you received** must be on the warranty claim and your warranty clerk must enter the serial number in the Diagnostic Trouble Codes field.

   NOTE:

   - The replacement part number is printed on the top part of the label and the serial number is printed on the bottom. **Make sure you attach the label to the R.O. and give it to the warranty clerk**.
   - There may also be a colored sticker located in the kit, ignore it because it is not used.
   - Not all inflator kits have a label included. In those cases, write the serial number and part number from the side of the inflator box on the R.O. The part number always starts with 047.

   INFLATOR PARTS BOX

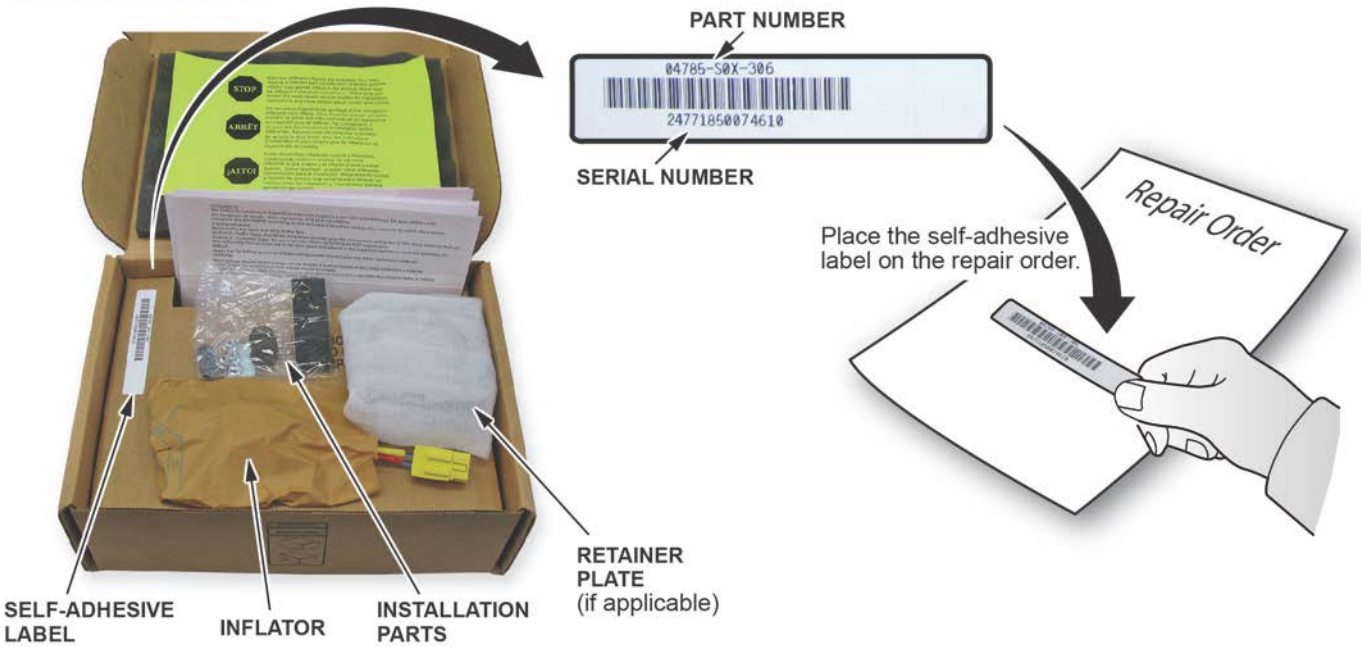

3. Place the airbag, face down, on a clean shop towel.

4. Visually inspect the airbag and the inflator for any unusual writing or markings.
   - If there is nothing unusual about the airbag or the inflator, go to step 5.
   - If there are any unusual markings, like an incorrect label or a model year written in marker, the airbag and inflator may not be the correct airbag and/or inflator for the vehicle or it may be a counterfeit part. For more information about counterfeit airbags, you can refer to *safercar.gov*, enter keywords **MANAGING COUNTERFEIT**, and select **Recommended Dealer Guidance for Managing Counterfeit Air Bags** from the list. **If you suspect that the airbag or inflator is counterfeit, do not continue this procedure**. Contact your DPSM for assistance.

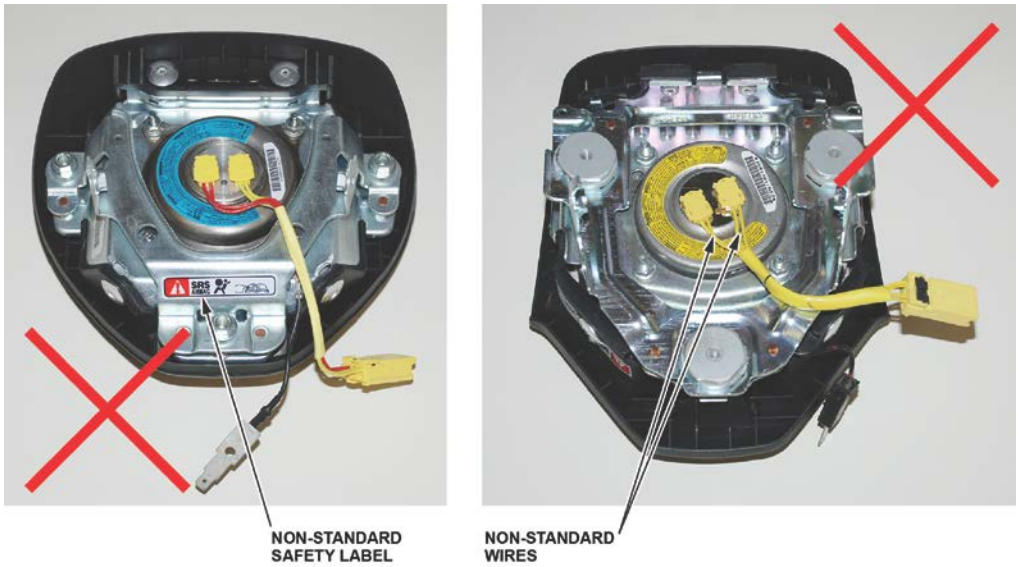

5. Remove the four horn plate mounting bolts, the mounting bolt felt washers, the horn plate, and remove the felt tape covering the lower two inflator locknuts. The felt washers and felt tape will not be reused.

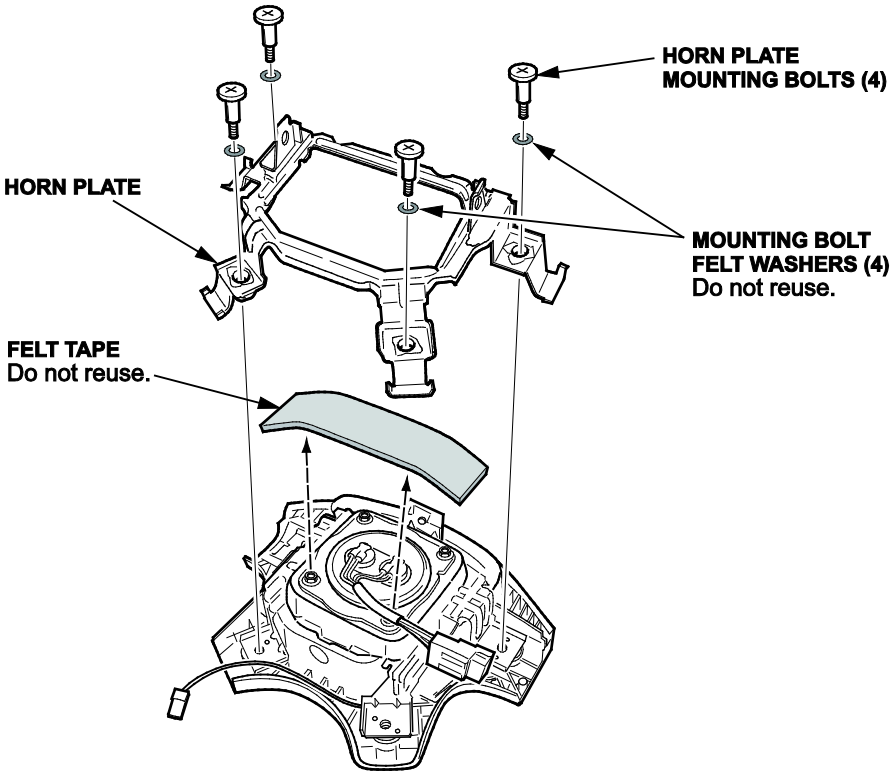

6. Using needle-nose vise grips or a 3/8 in. 6-point socket, remove the four locknuts from the inflator. The locknuts will not be reused.

   NOTE: Do not remove the inflator from the airbag until you complete step 7.

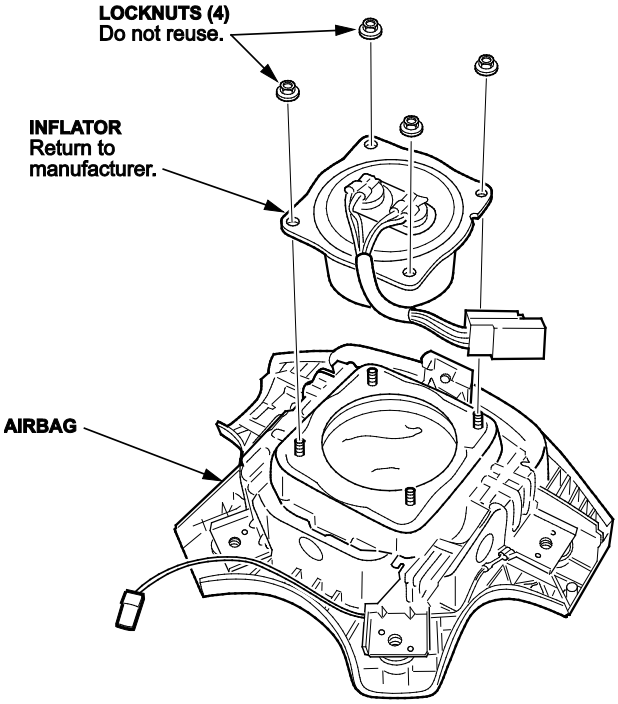

7. Use shop air to clean any debris that may be on the inflator, then remove the inflator from the airbag.

   NOTE:
   - Do not allow any debris to enter the inflator opening in the airbag.
   - Do not deploy the inflator. The inflator must be returned to its supplier in the box the new inflator came in. Follow the shipping instructions supplied with the inflator kit. If you have any questions about shipping, call Warranty Parts Inspection (WPI) at **937-642-2737**.
8. Turn over the airbag (inflator side down), and shake it to remove any debris from the inflator opening.
9. Install the new inflator in the airbag.

   NOTE: There may be some minor surface rust or corrosion on the new inflator; this is OK.
   Click on the image below for a short video about the different inflators.

Check your part number against the ones listed for each installation procedure. Use the correct installation procedure for the part you received.

Part Number

04770-S5A-305

- Insert the inflator into the opening.

NOTE: Make sure the inflator wires are positioned toward the bottom of the airbag. If you install the inflator incorrectly, you may not be able to reconnect the SRS airbag harness.

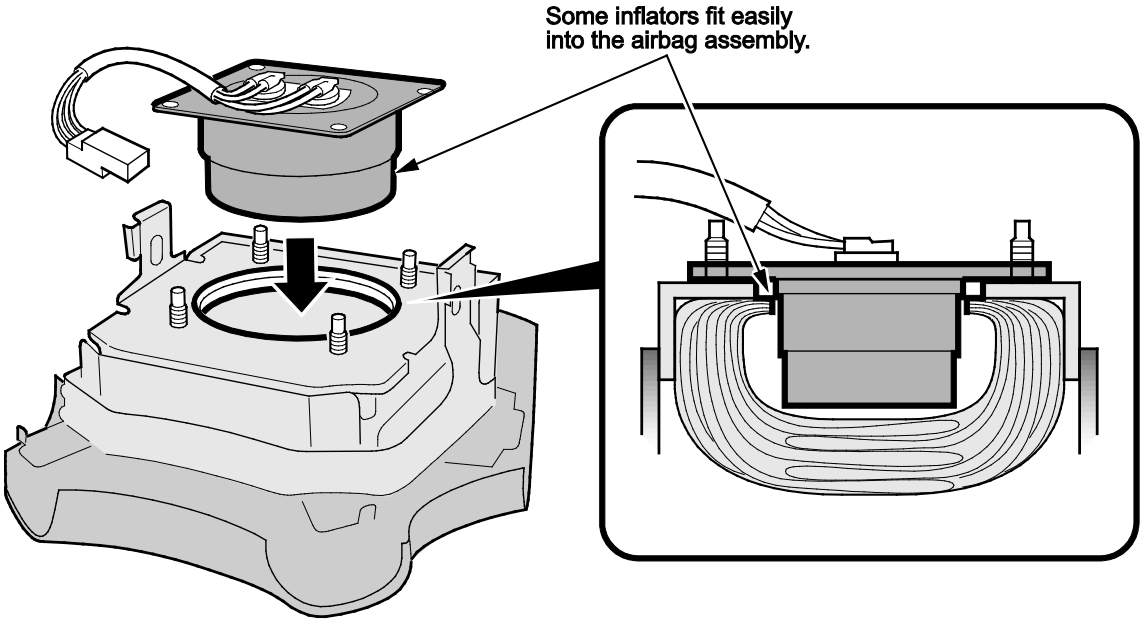

Check your part number against the ones listed for each installation procedure. Use the correct installation procedure for the part you received.

Part Number

04770-S5A-405

- Insert the airbag inflator into the opening. Do not force it into the airbag module.

NOTE: Make sure the inflator wires are positioned toward the bottom of the airbag. If you install the inflator incorrectly, you may not be able to reconnect the SRS airbag harness.

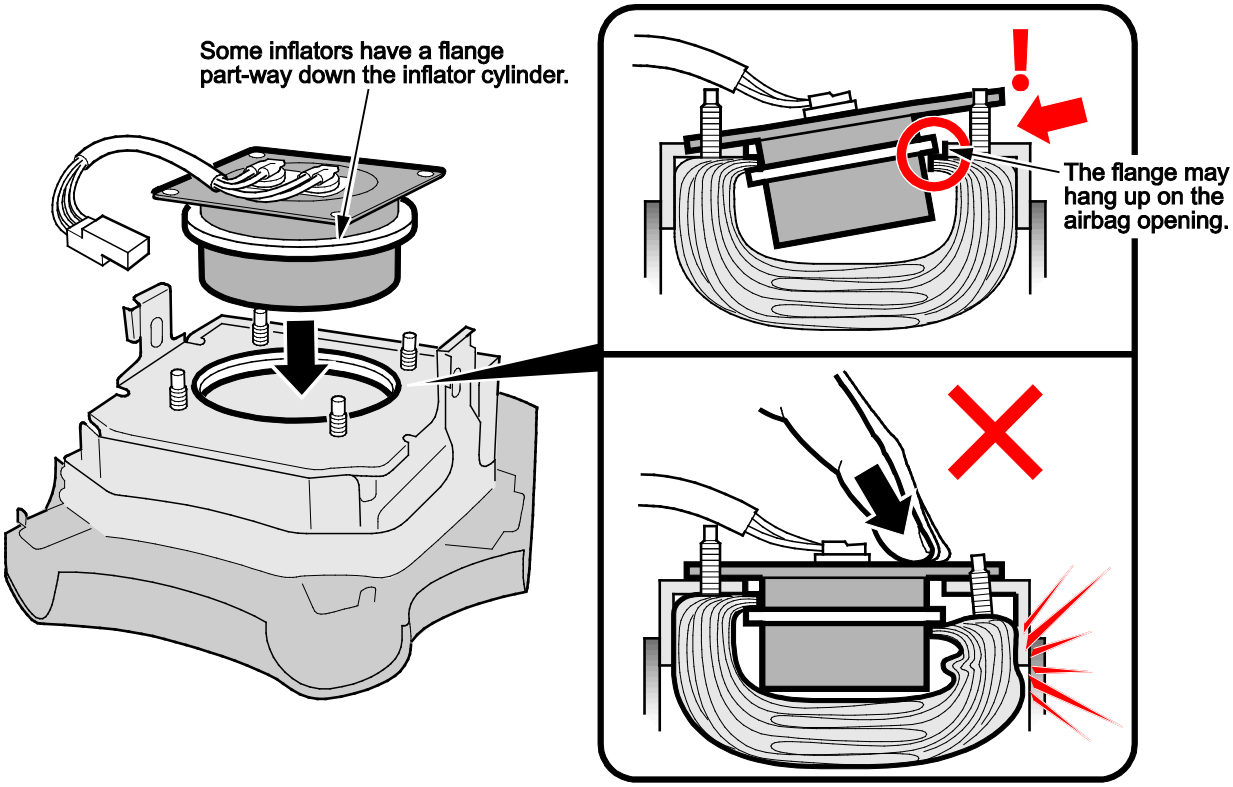

- Using a pair of pliers, gently pull up on each stud up while pushing the inflator module down until the airbag is properly seated within the airbag module.

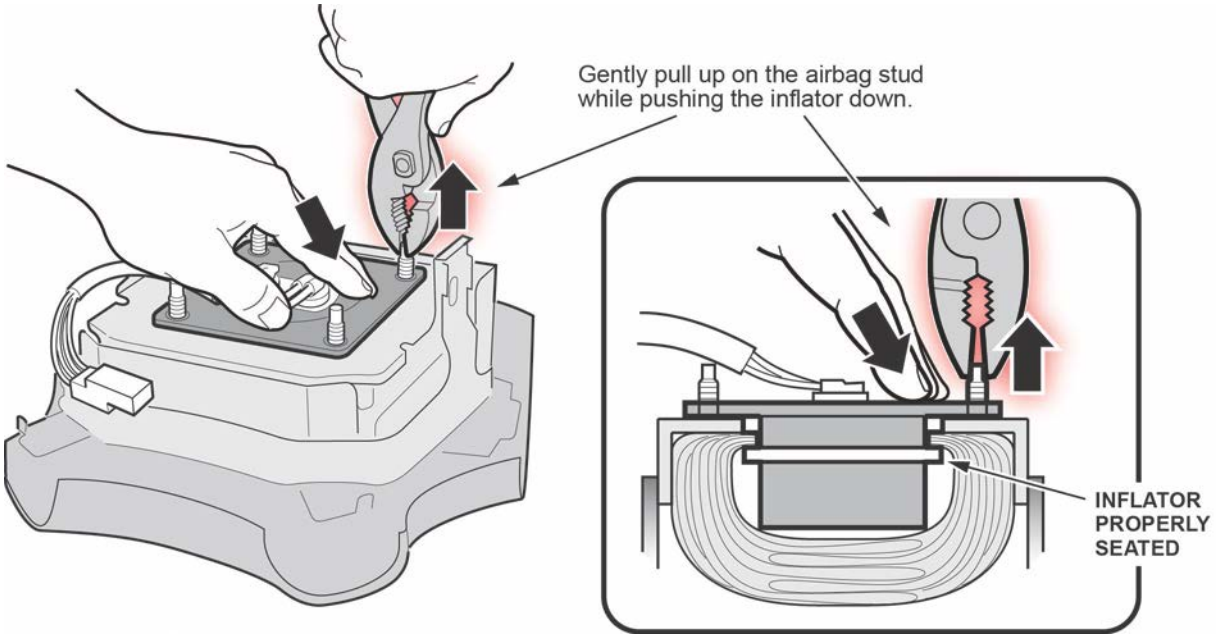

10. Install and torque the new locknuts to **3.9 N·m (2.8 lb-ft, 34 lb-in)**.
11. Cover the lower two inflator locknuts with new felt tape.
12. Reinstall the horn plate with new felt washers on its mounting bolts. Torque the mounting bolts to **3.4 N·m (2.5 lb-ft, 30 lb-in)**, then make sure the horn plate moves freely.
13. Reinstall the driver's airbag using new Torx bolts.
14. Give your warranty clerk the R.O. that includes the inflator serial number and replacement part number. For the warranty claim to be paid, the **replacement inflator part number** must be on the warranty claim and your warranty clerk must enter the serial number in the Diagnostic Trouble Codes field.

END