April 14, 2015 46169-01677

Safety Recall: Replacement Driver's Airbag Inflator Can Be Over-Pressurized

Supersedes 10-026, dated February 6, 2015; to revise the information highlighted in yellow

AFFECTED VEHICLES

Year	Model	Trim	VIN Range
2003	3.2CL	ALL	Check the iN VIN status for eligibility
2002–03	3.2TL	ALL	Check the iN VIN status for eligibility

REVISION SUMMARY

New and different inflators are available. You may receive a different part number than ordered, and the inflator may appear different. As a result, there may be different installation instructions. Make sure you review this service bulletin for installation instructions and details about model applicability. PARTS INFORMATION and REPAIR PROCEDURE were updated to reflect these new parts.

NOTE: Step 10 under REPAIR PROCEDURE was changed to include installation procedures for all applicable inflator part numbers.

BACKGROUND

The inspection procedure for Takata driver's airbags was removed because all Takata driver's airbag inflators installed in the recall vehicle population are being replaced. A manufacturing error can produce over-pressurization of some replacement driver's (front) airbag inflators during airbag deployment. If an affected airbag deploys, the increased internal pressure may cause the inflator casing to rupture. Metal fragments could pass through the airbag cushion material, possibly causing an injury or fatality to vehicle occupants.

CLIENT NOTIFICATION

Owners of affected vehicles will receive a notification of this campaign.

Do an **iN VIN status inquiry** to make sure the vehicle is shown as eligible.

Some vehicles affected by this campaign may be in your used vehicle inventory. These vehicles must be repaired before they are sold.

Should your dealership sell an unrepaired vehicle that subsequently causes injury or damage because of the recalled item, the dealership will be solely responsible to the damaged party, and will be required to defend and indemnify American Honda for any resulting claims. To see if a vehicle in inventory is affected by this recall, do a VIN status inquiry before selling it.

CORRECTIVE ACTION

Replace the driver's airbag inflator, then return the original, undeployed inflator as directed.

CLIENT INFORMATION: The information in this bulletin is intended for use only by skilled technicians who have the proper tools, equipment, and training to correctly and safely maintain your vehicle. These procedures should not be attempted by "do-it-yourselfers," and you should not assume this bulletin applies to your vehicle, or that your vehicle has the condition described. To determine whether this information applies, contact an authorized Acura automobile dealer.

© 2015 American Honda Motor Co., Inc. – All Rights Reserved

PARTS INFORMATION

NOTE: Always use new Torx bolts to reinstall the airbags. The new Torx bolts are coated with threadlock to make sure they do not come loose.

Part Name	Part Number	You may receive any of the following	Quantity
2003 3.2CL Driver's Airbag Inflator Kit	04770-S5A-305	04770-S5A-305 04770-S5A-405	1
2002–03 3.2TL Driver's Airbag Inflator Kit	04770-S5A-305	04770-S5A-305 04770-S5A-405	1

NOTE:

- The inflator kit box must be used to return the recalled inflator to its supplier, **ideally within 48 hours of the repair**. Be careful not to damage the inflator kit box.
- If the defective, undeployed inflator is not returned, the warranty claim for that vehicle will be charged back to your dealership.
- Follow the shipping instructions supplied with the inflator kit. If you have any questions about shipping, call Warranty Parts Inspection (WPI) at **937-642-2737**.
- The kit contains FedEx Ground shipping documents and instructions for the airbag inflator. If you are a dealer in Alaska or Hawaii, call the WPI administrative office at 937-642-2737 for FedEx Air shipping documents and instructions; do not use the documentation included in the airbag inflator kit.

WARRANTY CLAIM INFORMATION

NOTE:

- Enter the part number of the inflator that you received into the warranty claim, **not the part number that you ordered**. For more information, refer to step 2 of REPAIR PROCEDURE.
- To avoid non-payment of warranty claims, the serial number on the box of the new airbag inflator must be entered in the Diagnostic Trouble Codes field on each warranty claim. For more information, refer to step 2 of REPAIR PROCEDURE.
- To avoid a warranty claim being charged back to your dealership, you must return the original, undeployed inflator to its supplier. Follow the shipping instructions supplied with the inflator kit. If you have any questions about shipping, call Warranty Parts Inspection (WPI) at **937-642-2737**.
- Template IDs cannot be used because there are different inflator part numbers available and it would be too complex to have a template ID for each part number.

Year/Model	Operation Number	Description	Flat Rate Time	Defect Code	Symptom Code	Failed Part Number
2003 3.2CL	7525A6	Replace the driver's airbag inflator.	0.5 hr	5US00	R5500	06770-SY8-A90ZA
2002–03 3.2TL	7525A6		0.5 hr	5US00	R5500	06770-S0K-A90ZA

Skill Level: Repair Technician

REPAIR PROCEDURE

NOTE:

- Be careful not to damage any parts when replacing the inflator, and **follow the procedure exactly**.
- If, before removing the airbag, you suspect that it may be the incorrect airbag for the vehicle or a counterfeit, **do not remove the airbag**. Contact your DPSM for assistance.

1. Remove the driver's airbag.
2. Write down the serial number and part number located on the right side of the new inflator's box. For the warranty claim to be paid, the **replacement inflator part number that you received** must be on the warranty claim and your warranty clerk must enter the serial number in the Diagnostic Trouble Codes field.

   NOTE: Make sure you give the part number of the inflator you received to the warranty clerk, not the part number that was ordered.

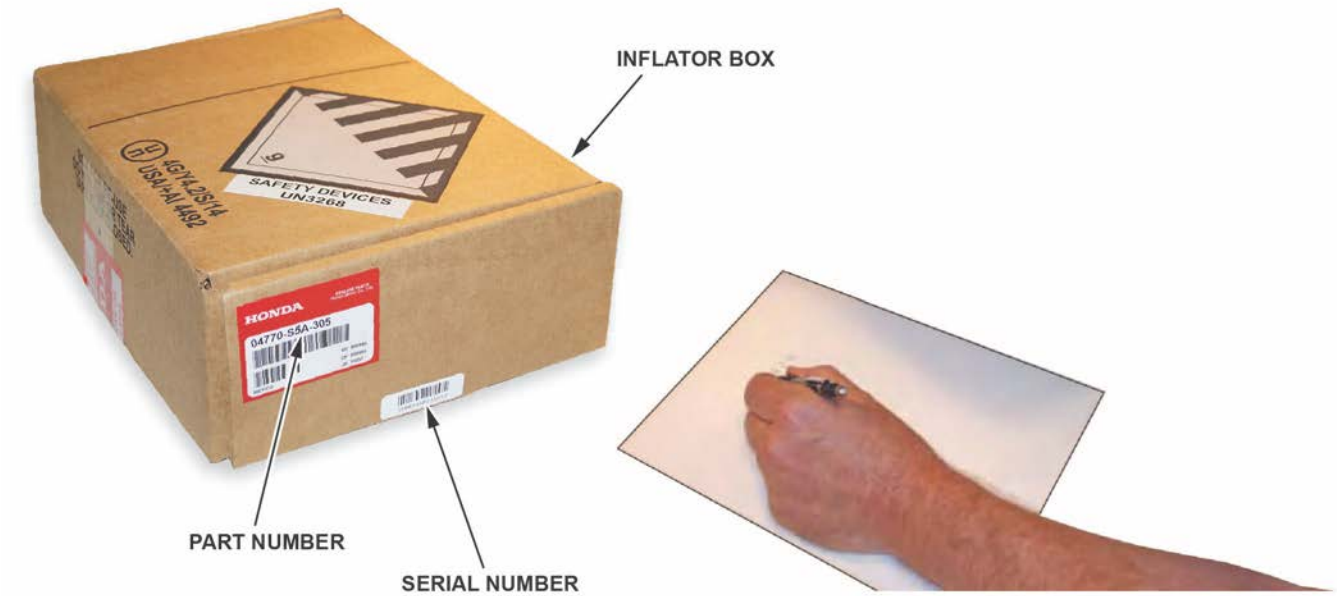

3. Place the airbag, face down, on a clean shop towel.

4. Visually inspect the airbag and the inflator for any unusual writing or markings.
   - If there is nothing unusual about the airbag or the inflator, go to step 5.
   - If there are any unusual markings, like an incorrect label or a model year written in marker, the airbag and inflator may not be the correct airbag and/or inflator for the vehicle or it may be a counterfeit part. For more information about counterfeit airbags, you can refer to *safercar.gov*, enter keywords **MANAGING COUNTERFEIT**, and select **Recommended Dealer Guidance for Managing Counterfeit Air Bags** from the list. **If you suspect that the airbag or inflator is counterfeit, do not continue this procedure**. Contact your DPSM for assistance.

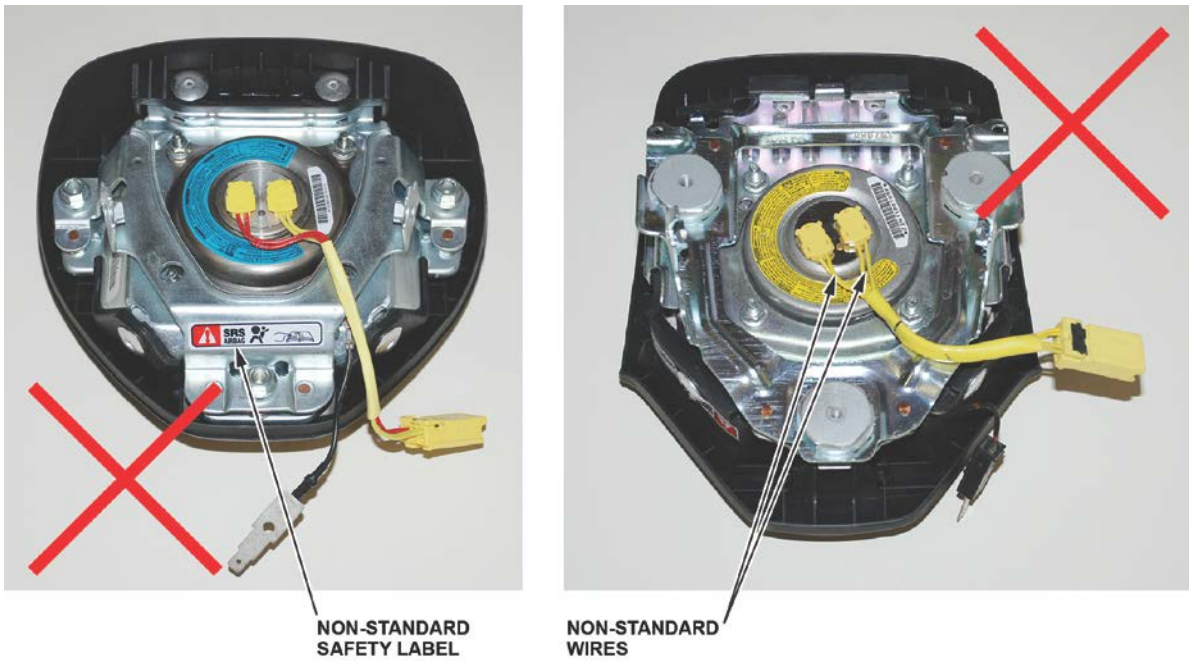

5. Remove the four horn plate mounting bolts, the mounting bolt felt washers, and the horn plate. The felt washers will not be reused.

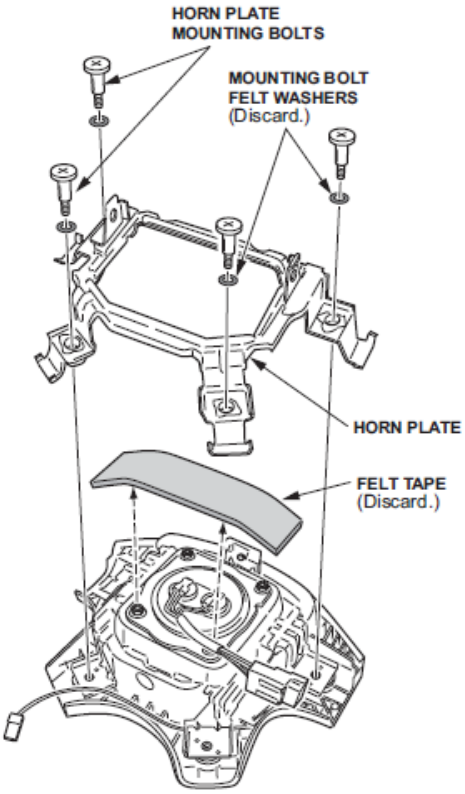

6. Remove and discard the felt tape covering the lower two inflator locknuts.
7. Using needle-nose vise grips or a 3/8 in. 6-point socket, remove the four locknuts from the inflator. The locknuts will not be reused.

   NOTE: Do not remove the inflator from the airbag until you complete step 8.

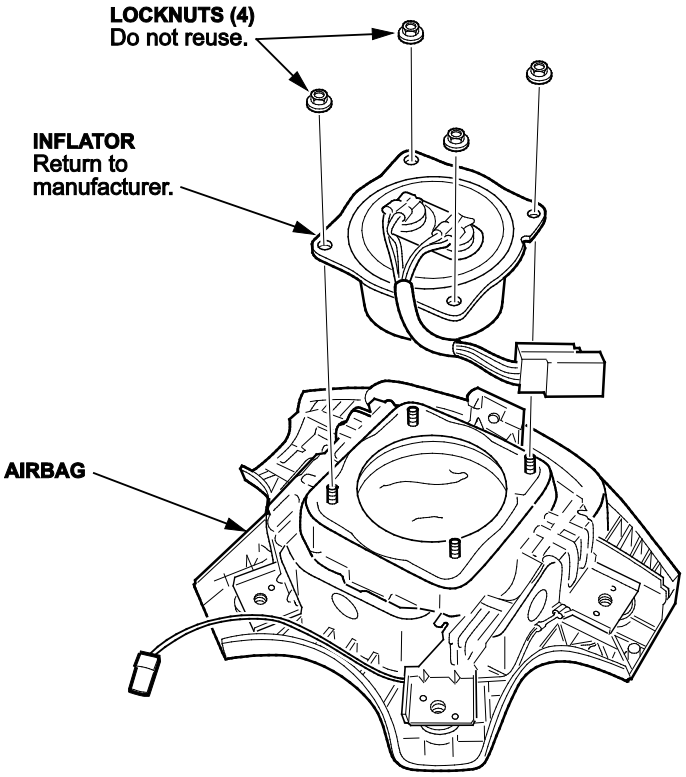

8. Use shop air to clean any debris that may be on the inflator, then remove the inflator from the airbag.

   NOTE:

   - Do not allow any debris to enter the inflator opening in the airbag.
   - Do not deploy the inflator. The inflator must be returned in the box the new inflator came in.

9. Turn over the airbag (inflator side down), and shake it to remove any debris from the inflator opening.

10. Install the new inflator in the airbag.

NOTE: There may be some minor surface rust or corrosion on the new inflator; this is OK.

Click on the image below for a short video about the different variations of the driver's and front passenger's replacement inflators involved with the recalls related to replacing Takata inflators. While both the driver's and front passengers inflators are shown in the video, this is informational only. Replace inflators only as directed by the iN VIN status inquiry.

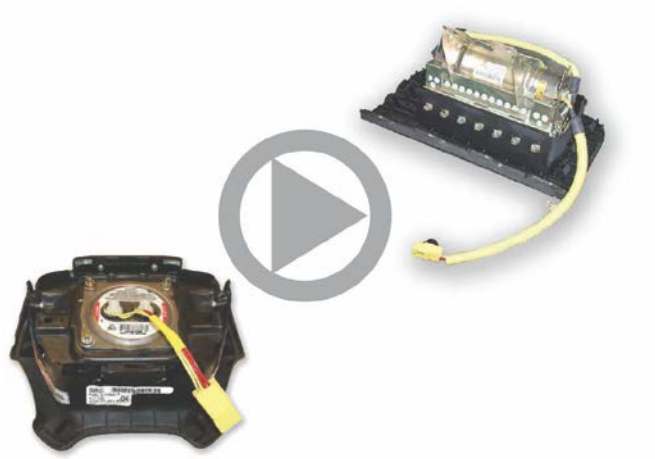

Check your part number against the ones listed for each installation procedure. Use the correct installation procedure for the part you received.

Part Number

04770-S5A-305 Refer to **Driver's Inflator Type 1** in the video.

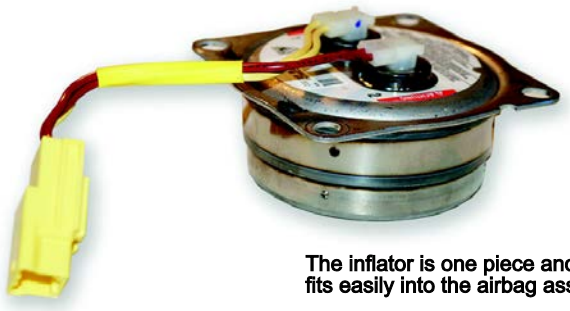

The inflator is one piece and
fits easily into the airbag assembly.

- Insert the inflator into the opening.

NOTE: Make sure the inflator wires toward the bottom of the airbag. If you install the inflator incorrectly, you may not be able to reconnect the SRS airbag harness.

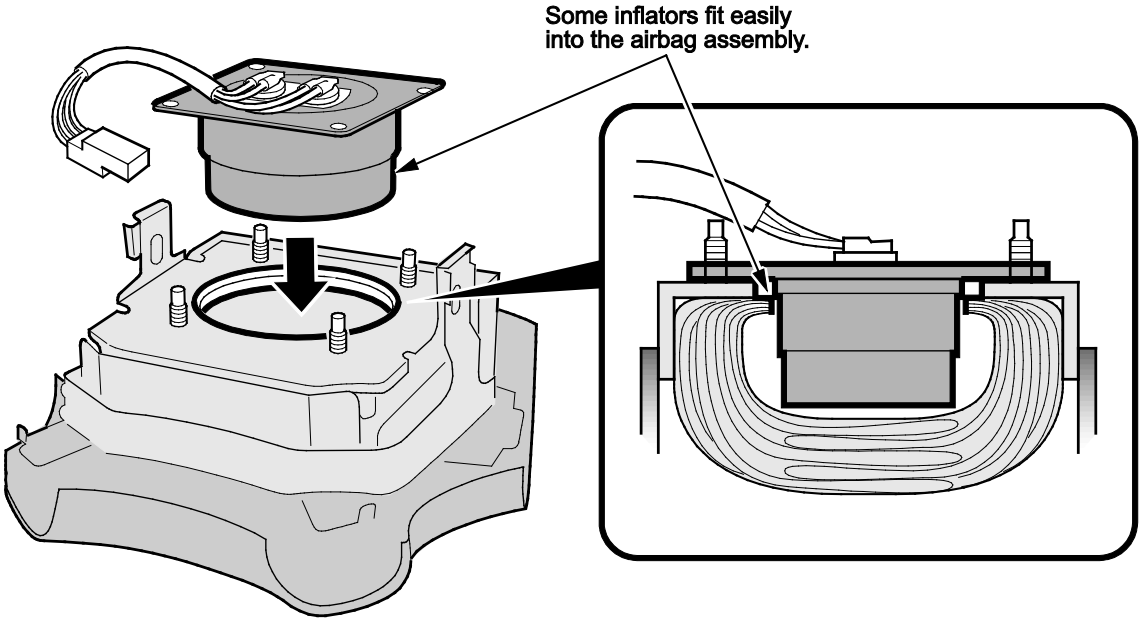

Check your part number against the ones listed for each installation procedure. Use the correct installation procedure for the part you received.

Part Number

04770-S5A-405 Refer to **Driver's Inflator Type 2** in the video.

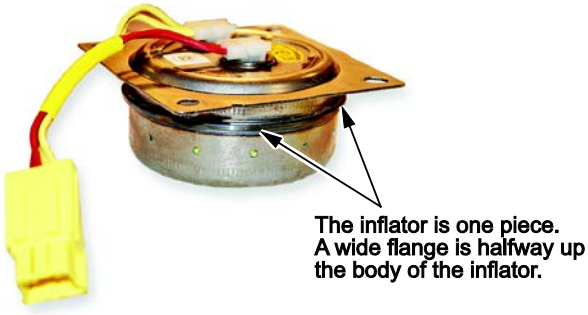

- Insert the airbag inflator into the opening. Do not force it into the airbag module.

NOTE: Make sure the inflator wires toward the bottom of the airbag. If you install the inflator incorrectly, you may not be able to reconnect the SRS airbag harness.

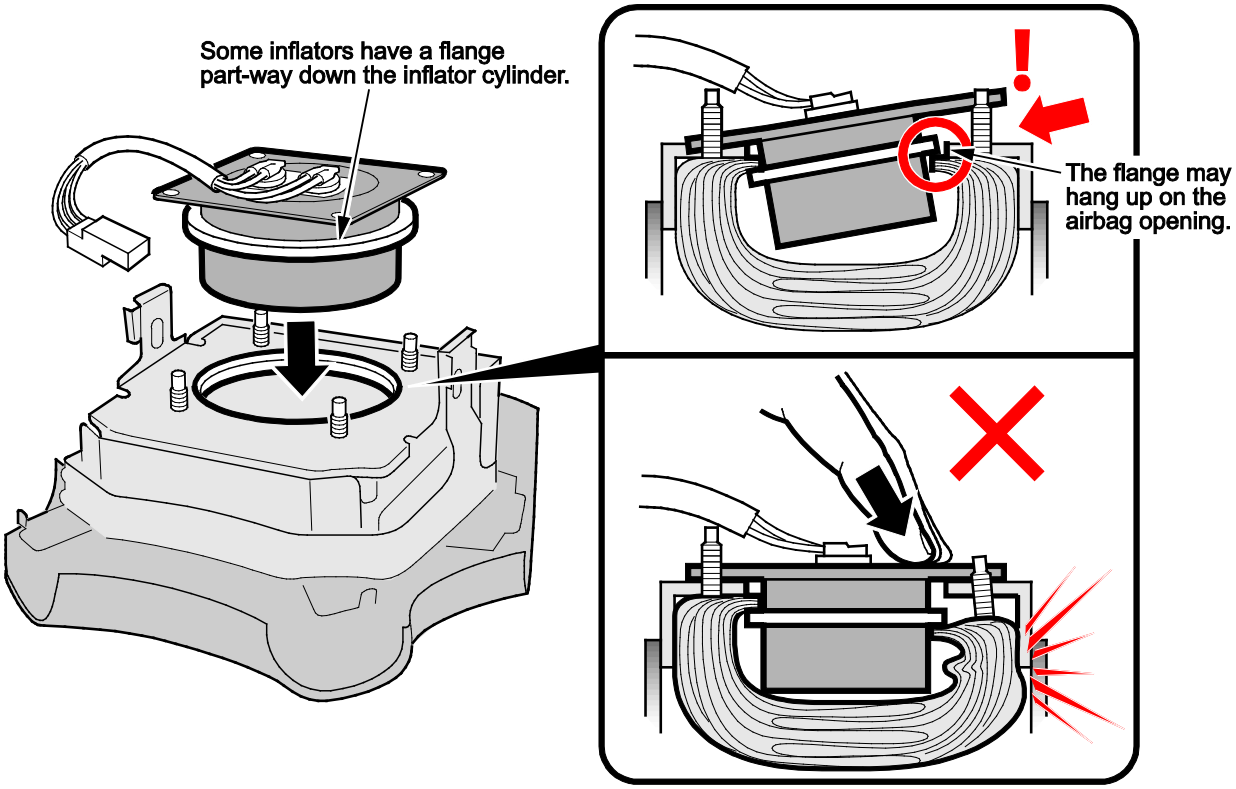

- Using a pair of pliers, gently pull up on each stud up while pushing the inflator module down until the airbag is properly seated within the airbag module.

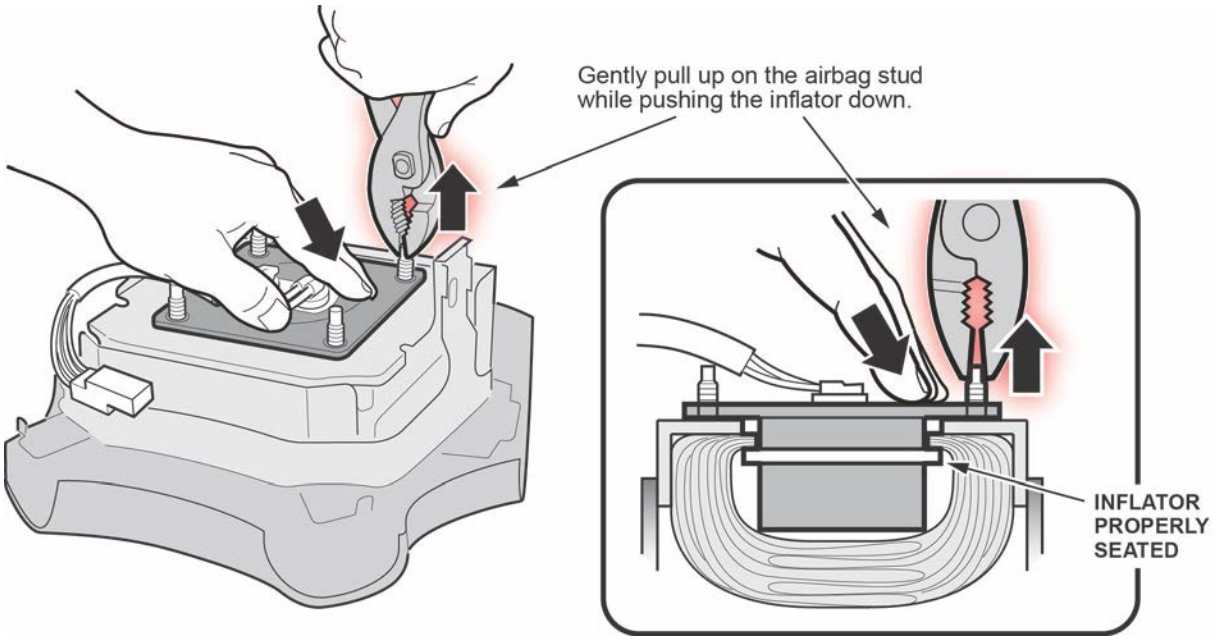

11. Install and torque the new locknuts to **3.9 N·m (2.8 lb-ft, 34 lb-in)**.
12. Cover the lower two inflator locknuts with new felt tape.
13. Reinstall the horn plate with new felt washers on its mounting bolts. Torque the mounting bolts to **3.4 N·m (2.5 lb-ft, 30 lb-in)**, then make sure the horn plate moves freely.
14. Reinstall the driver's airbag using new Torx bolts and torque the bolts to **9.8 N·m (7.2 lb-ft)**.
15. Give your warranty clerk the inflator serial number and part number that you wrote down in step 2. For the warranty claim to be paid, the **replacement inflator part number that you received** must be on the warranty claim and your warranty clerk must enter the serial number in the Diagnostic Trouble Codes field.

    END