IMPORTANT UPDATE

TECHNICAL INSTRUCTIONS

FOR

SAFETY RECALL DSF

FRONT PASSENGER AIRBAG INFLATOR MODULE

CERTAIN 2003 – CERTAIN 2004 MODEL YEAR COROLLA
CERTAIN 2003 – CERTAIN 2004 MODEL YEAR MATRIX

SSC D0F is no longer valid and has been replaced by SSC DSF

Updated 4/15/15
- **The VIN range has been removed; always check TIS to verify vehicle eligibility.**

All dealership associates involved in the recall process are required to successfully complete E-Learning course SC13A. To ensure that all vehicles have the repair performed correctly; technicians performing this recall repair are required to have successfully completed E-Learning course SC13B, in addition to SC13A, and currently hold at least one of the following certifications levels:

- **Toyota Expert (Electrical)**
- **Master**
- **Master Diagnostic Technicians**

Complete DSF Technical Video Supplement

NOTE: The videos in this document still reflect the inspection process under D0F that has been eliminated. For Airbag Assembly and Inflator Serial Number scanning/ recording reference the technical instructions. The videos are currently being edited to reflect the new process and will be posted as soon as they are available.

I. OPERATION FLOW CHART

The flow chart is for reference only. *DO NOT* use it in place of the full technical instructions. Follow *ALL* steps as outlined in the full technical instructions to confirm the campaign is completed correctly.

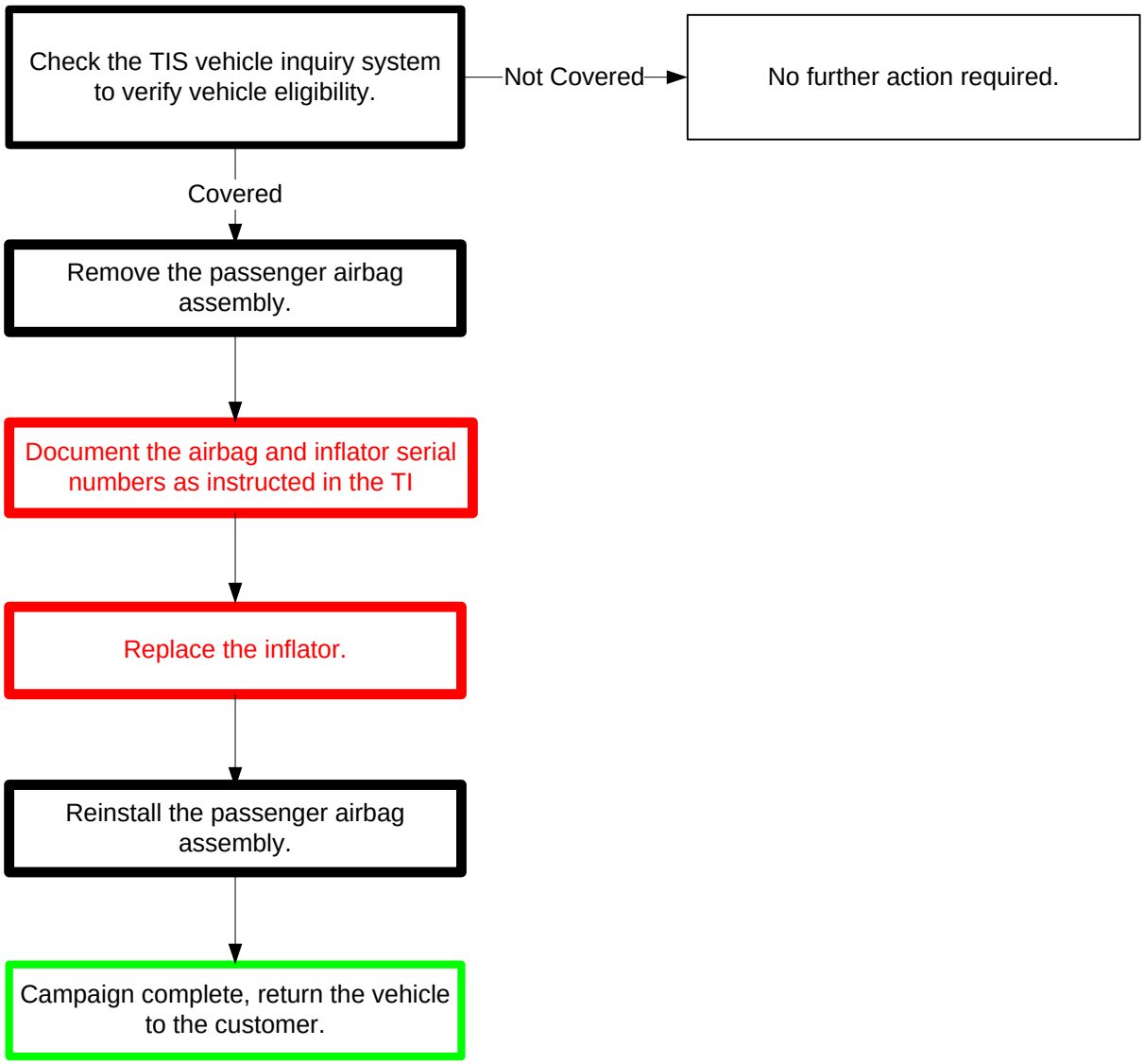

II. BACKGROUND

The subject vehicles are equipped with front passenger airbag inflators which could have been assembled with improperly manufactured propellant wafers. Improperly manufactured propellant wafers could cause the inflator to rupture and the front passenger airbag to deploy abnormally in the event of a crash, increasing the risk of injury to the occupant.

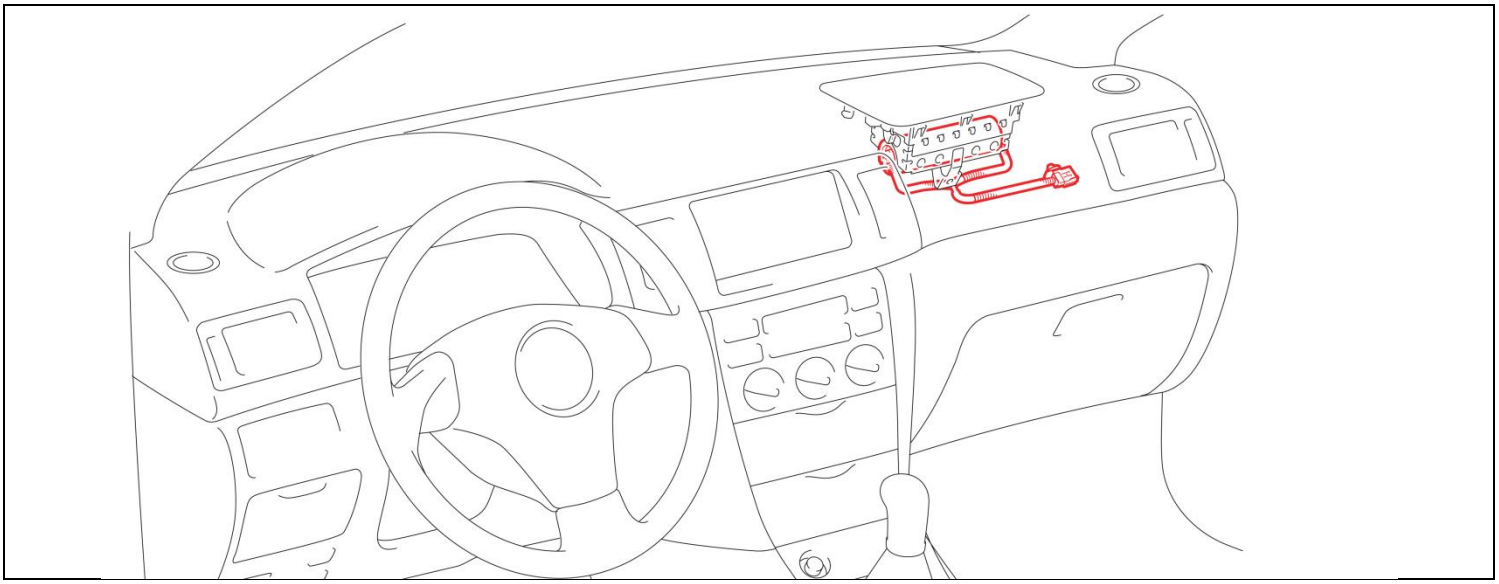

III. IDENTIFICATION OF AFFECTED VEHICLES

A. COVERED VIN RANGE

- Check the TIS Vehicle Inquiry System to confirm the VIN is involved in this Safety Recall, and that the campaign has not already been completed prior to dealer shipment or by another dealer.
- **TMS warranty will not reimburse dealers for repairs conducted on vehicles that are not affected or were completed by another dealer.**

IV. PREPARATION

A. PARTS

Model	Part Number	Part Description	Quantity
Corolla	04003-28102	Instrument Panel Airbag Inflator Kit*	1
Matrix	04003-28101	Instrument Panel Airbag Inflator Kit*	1

*The kit above includes the following parts. Both kits include the same components, but because the components are different the kits ***ARE NOT*** interchangeable.

Inflator	1
Self Locking Nut	4
Stopper Plate	1
Position Determining Plate	1
Electro Tap	1
Felt Tape Strips	2

B. TOOLS & EQUIPMENT

- Standard hand tools
- Molding remover set
- Torque wrench
- Techstream

***OPTIONAL* SST –** This is an essential special service tool that the dealership should have. This tool is not mandatory when performing this repair.

Part Number	Part Name	Quantity
09890-47010-01	Anti-Static Mat Set	1

DSF CAMPAIGN TOOLS – These tools where previously provided to the dealership for campaign D0F and will be used for campaign DSF. These tools are required when performing this repair.

Image	Name	Quantity
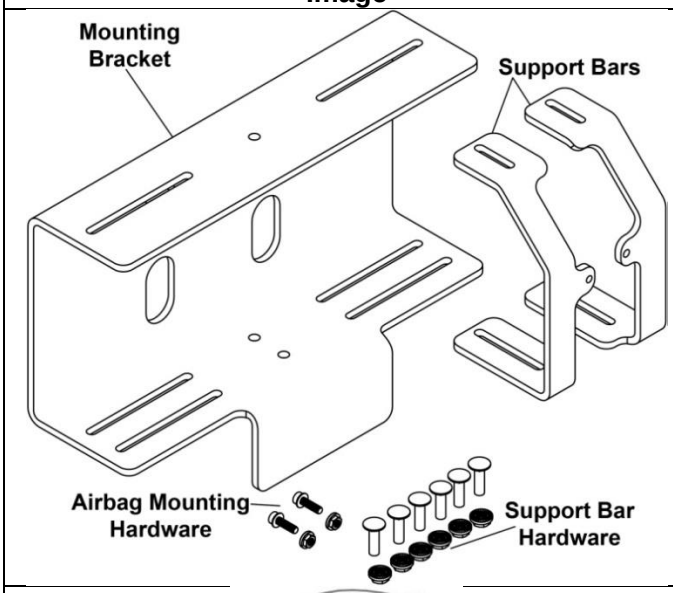	Airbag Mounting Bracket & hardware	1
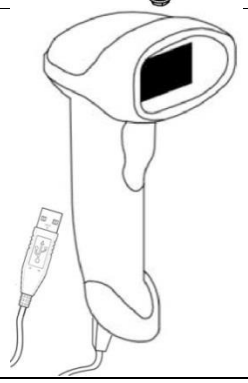	Barcode Scanner	1

NOTE: These tools *CANNOT* be ordered through the parts or tools system. There is a very limited supply of tools, but if additional tools are needed, contact your regional representative.

V. SAFETY PRECAUTIONS

CRITICAL INFORMATION – READ THOROUGHLY

Failure to follow these procedures correctly could cause the SRS to unexpectedly deploy during servicing or the SRS may fail to operate correctly when required after reassembly. Confirm all work is performed as described in these instructions.

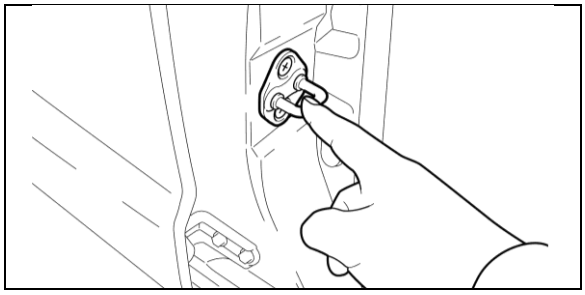

1. ELIMINATE STATIC ELECTRICITY

a) Before starting work and periodically while working on the vehicle, touch a metallic part of the vehicle to discharge static electricity in the body.

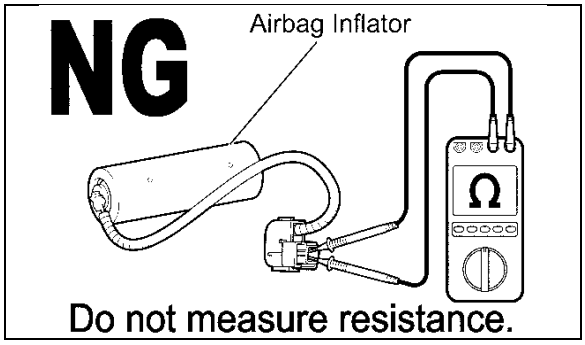

2. DO NOT MEASURE RESISTANCE

a) ***DO NOT*** measure resistance of airbag components, this may cause accidental activation.

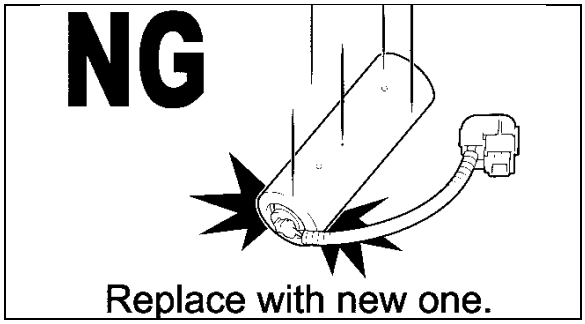

3. HANDLE THE AIRBAG CAREFULLY

a) If an inflator is dropped, replace it with a ***NEW*** inflator.

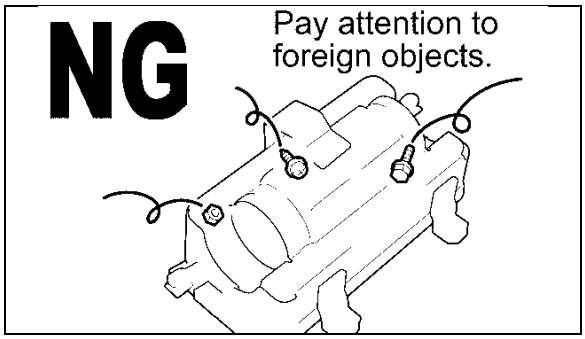

4. DO NOT ALLOW FOREIGN OBJECTS NEAR AIRBAG

a) Be sure to collect and account for all removed nuts/bolts to prevent them from landing in the airbag assembly.

b) Any foreign objects in the airbag assembly may cause damage or injury if the airbag is activated.

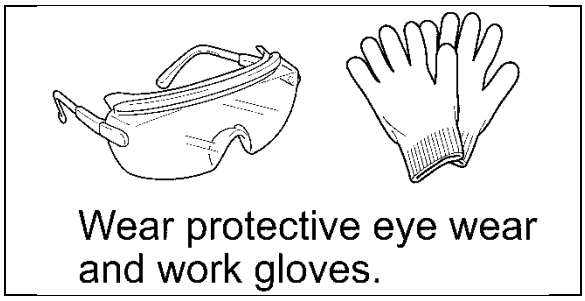

5. WEAR PROTECTIVE EQUIPMENT

a) Always wear appropriate protective equipment when working on the SRS.

VI. WORK AREA PREPARATION

Video Supplement: Introduction

CRITICAL INFORMATION – READ THOROUGHLY

The bracket assembly that was provided at the launch of SSC D0F is a critical added-safety feature that *MUST* be used when replacing the inflator module. Confirm the bracket assembly is installed securely in the vise and confirm the work area being used is appropriate. The anti-static mat set that is an essential SST may be available at your dealership and is optional to use during inflator replacement. If the anti-static kit is not available, before starting work and periodically while working on the vehicle, touch a metallic part of the vehicle to discharge static electricity in the body.

Confirm there are no loose objects or people exposed to the back side of the bracket for safety in the unlikely event of airbag deployment due to improper work procedures (Remember that the inflator ***IS NOT*** being replaced due to an inadvertent deployment concern).

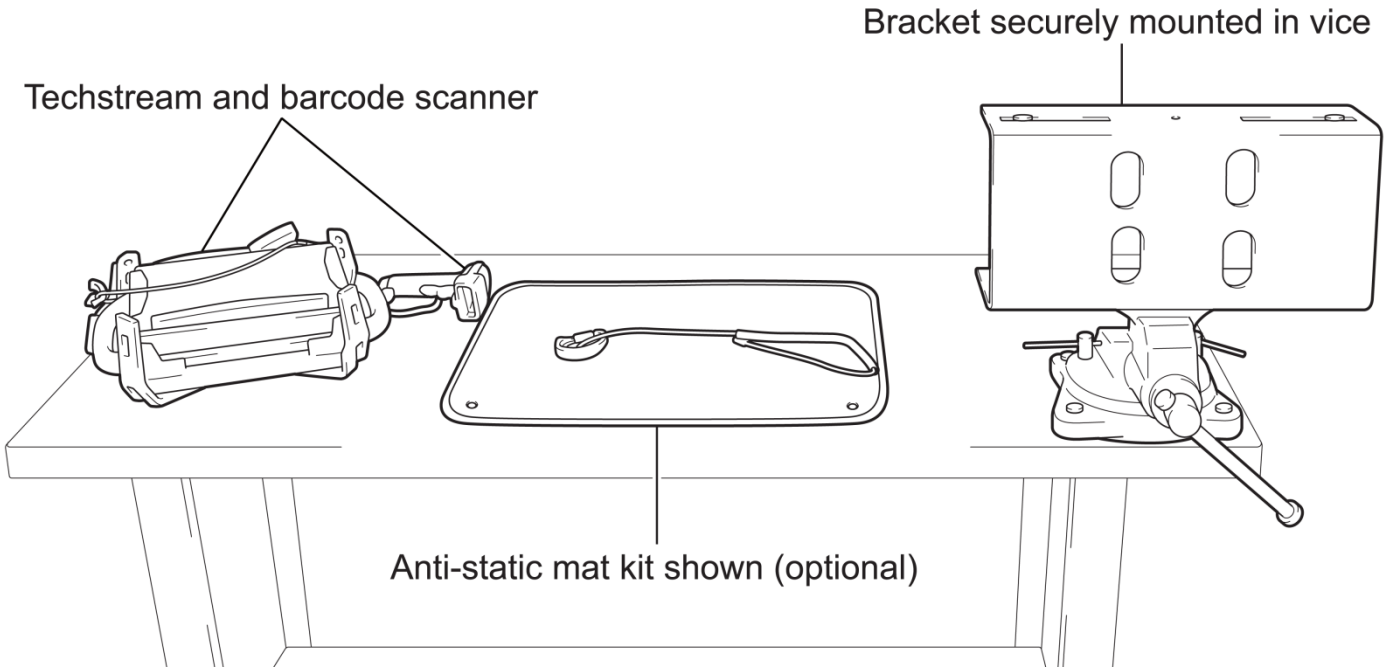

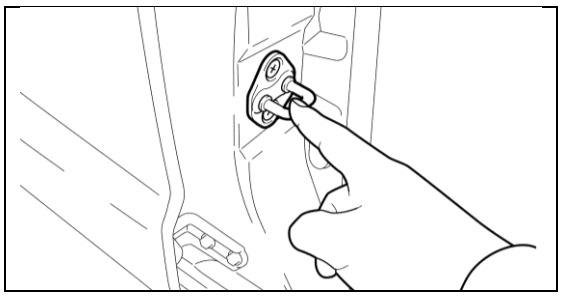

If the anti-static kit is not available, before starting work and periodically while working on the vehicle, touch a metallic part of the vehicle to discharge static electricity in the body.

VII. FRONT PASSENGER AIRBAG ASSEMBLY RECORDING

Video Supplement: Inspection

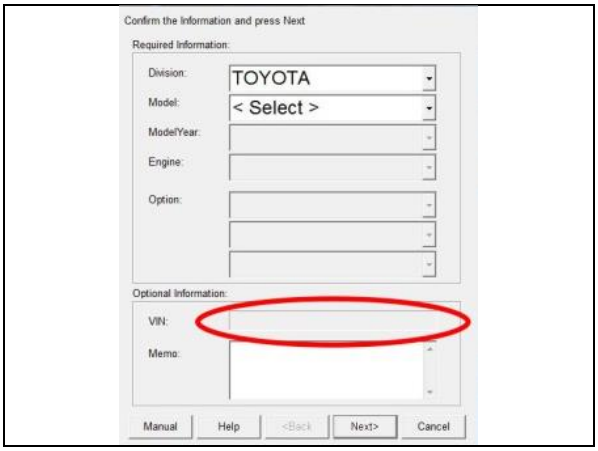

1. PERFORM A HEALTH CHECK

a) Confirm the Techstream is connected to the dealership's internet.

b) When launching the Techstream software the VIN ***MUST*** be entered manually.

NOTE: All letters of the VIN *MUST* be entered in ALL CAPS, or the VIN will need to be reentered when running the diagnostic report.

c) Perform a health check.

2. RUN A DIAGNOSTIC REPORT

a) After the health check has completed, run a diagnostic report by clicking on the link on the health check screen.

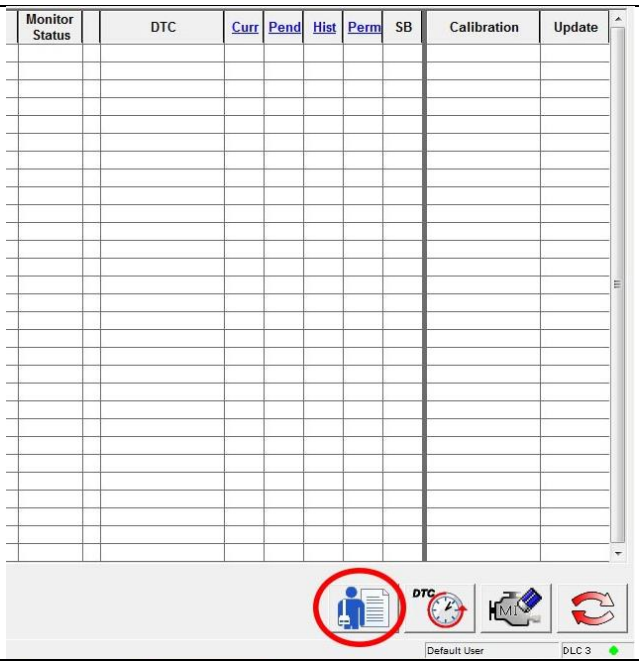

NOTE: If the VIN was not entered in ALL CAPS when Techstream was launched, an error will be displayed and there will be a prompt to reenter the VIN

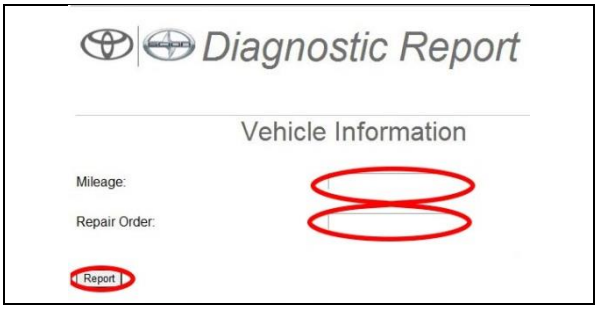

b) Enter the vehicle mileage and repair order information, then click the 'report' button.

- **The VIN *MUST* be entered manually in ALL CAPS when launching the Techstream software, the VIN *WILL NOT* auto-populate due to vehicle age.**
- **A health check and diagnostic report with VIN *MUST* be performed within the last 36 hours and recorded by TMS. If the diagnostic report is not ran, the healthcheck will not be recognized by TMS.**
- **The serial number recording application will be disabled and the repair cannot be completed if a health check and diagnostic report is not performed and recorded by TMS.**

3. LAUNCH THE SERIAL NUMBER RECORDING APPLICATION

- **The AIRBAG ASSEMBLY, ORIGNAL INFLATOR, and NEW INFLATOR serial numbers MUST be recorded using the barcode scanner (provided at the launch of SSC D0F).**
- **The barcode scanner application MUST be completed on every vehicle. These numbers MUST be included on every warranty claim that is submitted for inflator module replacement or the claim may be subject to debit.**
- **The technician performing the work MUST have valid TIS login credentials and an internet connection to perform the inspection and scanning process.**

a) Log in to TIS and input the VIN of the vehicle in the Vehicle Inquiry tab.

b) Confirm the VIN is applicable and that the campaign has not been completed.

c) Click on the link to launch the serial number recording application.

d) Reenter TIS password in the serial number recorder application.

NOTE: The person logged-in to TIS should be the person performing the repair.

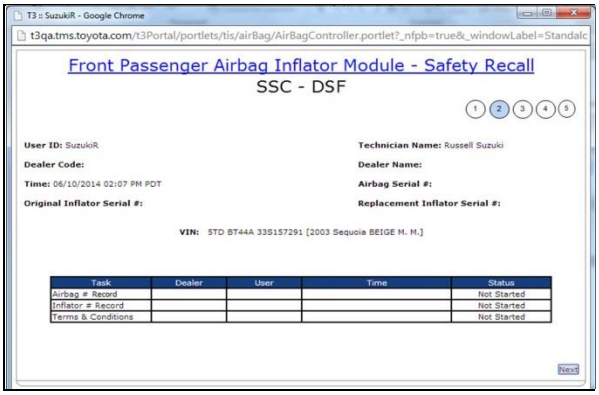

NOTE:

- **A task status screen will populate next and at other intervals during the repair. This screen will indicate if the inflator was replaced. Click 'next' to proceed to the next step. This information will be used for record keeping by TMS.**

- **If this screen indicates that the inflator has already been replaced on this VIN, there is no need to perform the campaign again.**

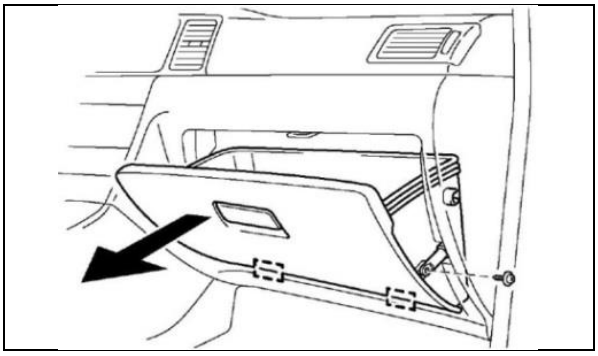

4. REMOVE THE GLOVE BOX

a) Remove the screw and disconnect the stopper sub-assembly.

b) Completely remove the glove box from the dashboard.

5. REMOVE THE AIRBAG ASSEMBLY

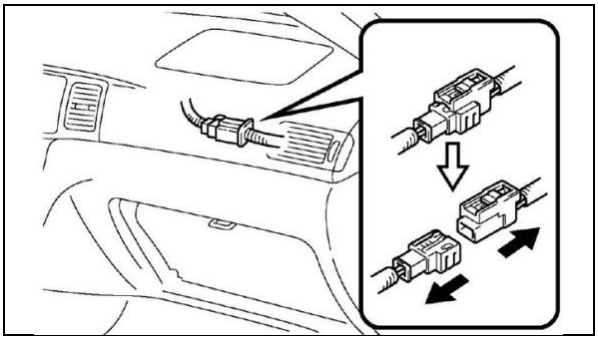

a) Disconnect the negative battery cable.

- **Wait at least 90 seconds after disconnecting the cable from the negative battery terminal to prevent airbag and seat belt pre-tensioner deployment.**
- **Follow all precautions as outlined on TIS before servicing the SRS system.**

b) Disconnect the airbag connector.

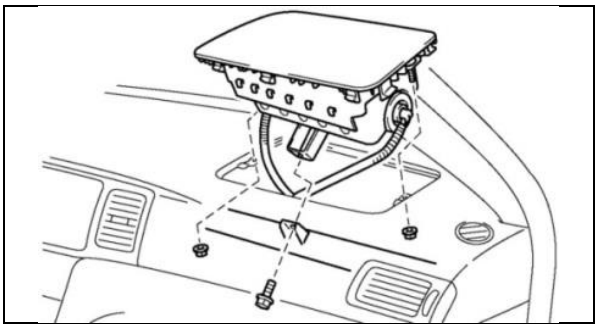

c) Remove the bolt and 2 nuts and remove the airbag assembly.

NOTE: Use caution to avoid scratching or damaging the dashboard assembly, place protective tape on the dashboard if needed.

6. CONNECT THE BARCODE SCANNER

a) Connect the barcode scanner to the USB port on the Techstream.

b) The scanner will automatically connect and a beep will be heard when the scanner is ready.

NOTE:

- **The scanner was provided for SSC D0F.**
- **The scanner works best in low light conditions.**
- **Always hold the scanner directly in front of and parallel to the barcode label.**

7. SCAN THE AIRBAG SERIAL NUMBER

a) Scan the ***AIRBAG ASSEMBLY*** serial number 2 times.
   1) Confirm the cursor is in the first serial number box then scan the serial.
   2) Position the cursor in the second serial number box then scan the serial.

b) Click next.

NOTE:

- **If both serial numbers that are entered do not match, confirm and reenter.**
- **If the serial number barcode will not scan, it can be entered manually.**
- **If the serial number and barcode are not legible or are not present, check the box in the application indicating the serial number is not legible and contact your regional representative.**

AIRBAG SERIAL NUMBER IDENTIFICATION

- **The airbag serial number is *ALWAYS* the 12 *DIGITS* located between the asterisks.**
- **The 3 digits before the asterisk *ARE NOT* part of the serial number, and *SHOULD NOT* be entered or an inaccurate response may be returned.**

Airbag Serial Number Label Example

STOP **The *AIRBAG ASSEMBLY* serial number and the *INFLATOR* serial number are *DIFFERENT*. The *AIRBAG ASSEMBLY* serial number *MUST* be recorded prior to replacement.**

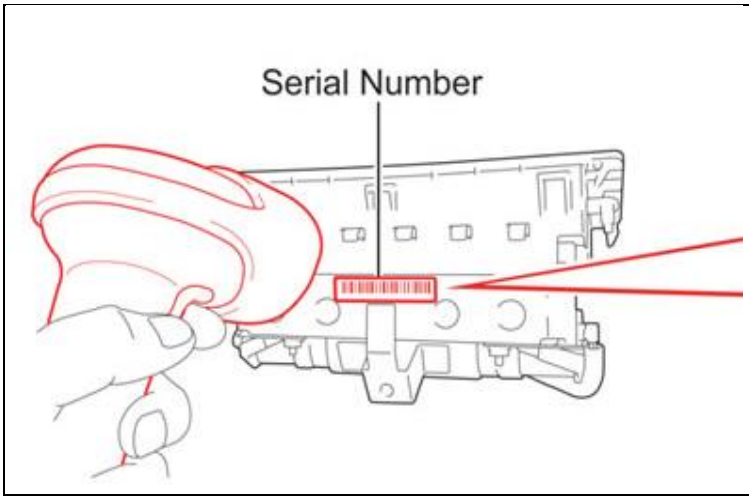

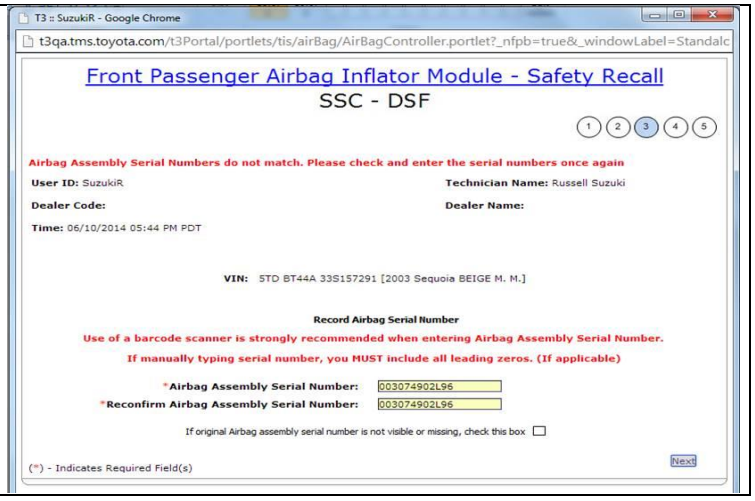

VIII. INFLATOR REPLACEMENT

Video Supplement: Inflator Replacement

CRITICAL INFORMATION – READ THOROUGHLY

The connector of the inflator module contains a short circuiting mechanism to eliminate voltage variances when the connector(1) is disconnected. To allow for the replacement of the inflator module, a new short circuit(2) *MUST* be created before cutting the wires(3) and removing the inflator. The following steps *MUST* be followed exactly as described to ensure the work is completed correctly and safely.

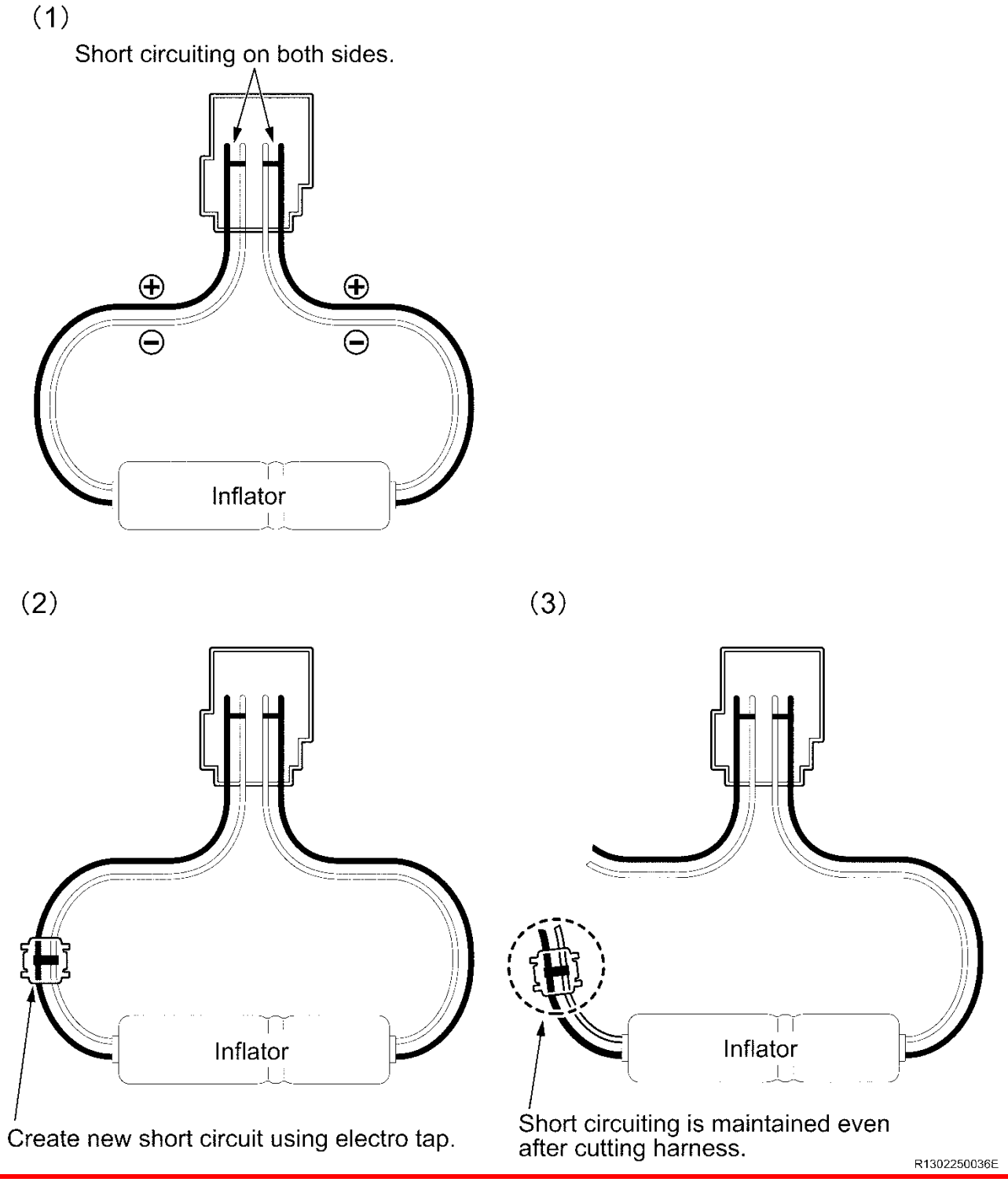

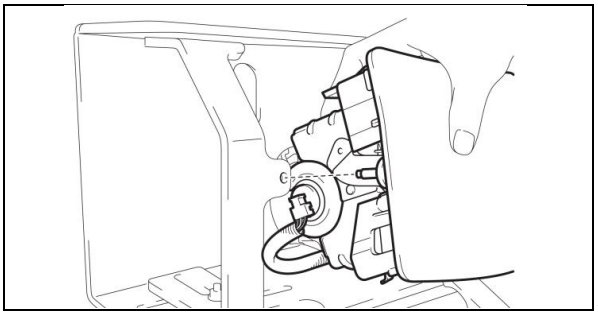

1. MOUNT THE AIRBAG IN THE MOUNTING BRACKET

a) Position the two mounting studs on the airbag assembly into the holes on the bracket support bars.

b) Install the airbag to the support bars with the nuts supplied in the bracket kit.

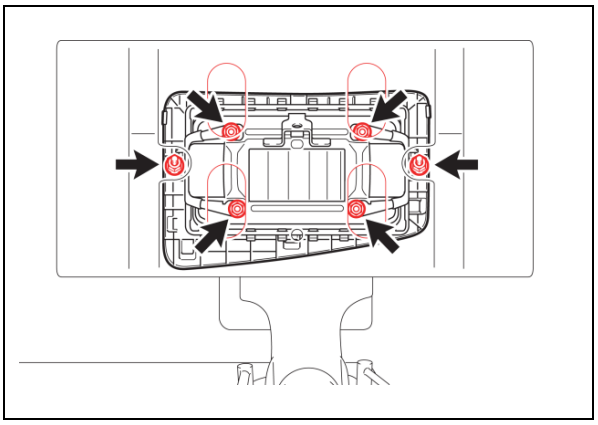

c) Position the airbag so that all four stopper plate nuts can be removed through the access holes.

d) Tighten the nuts holding the support bars to the mounting bracket.

e) Confirm the following:
- Mounting bracket is secure in the vise.
- Airbag is secure in the support bars.
- The center mounting bracket on the airbag assembly is facing upward.
- Support bars are secure on the mounting bracket using 1 bolt/nut at the top of each support bar and 2 nuts/bolts at the bottom of each support bar.

CRITICAL INFORMATION – READ THOROUGHLY

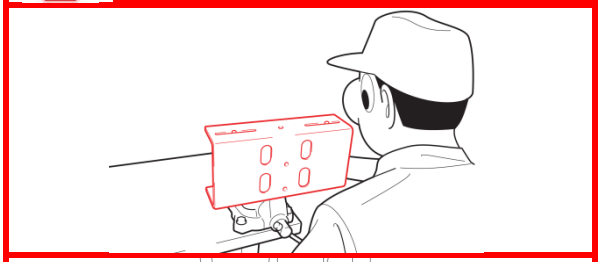	***ALWAYS* keep as much of your body as possible in front of the bracket when working on the airbag assembly.**
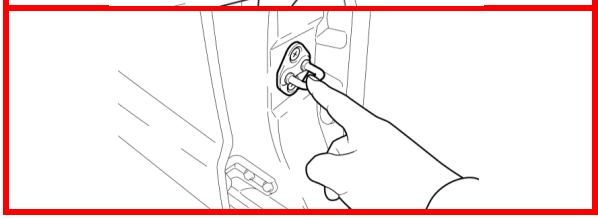	**Remember to periodically touch a metallic part of the vehicle to discharge static electricity in the body if the anti-static kit is not being used.**

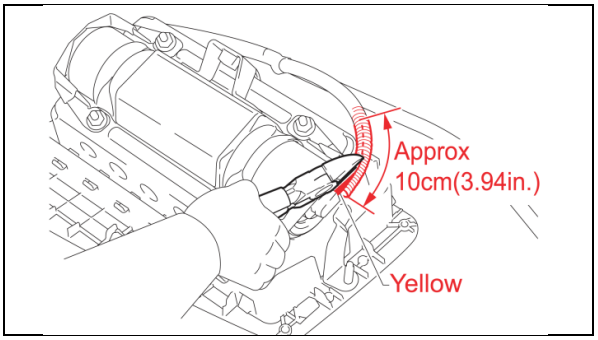

2. PREPARE TO INSTALL THE SHORT CIRCUIT

a) Cut the yellow corrugated tube on the harness approximately 4 inches (10 cm) using nippers.

- ***DO NOT* damage the wires in the tube.**
- ***DO NOT* use a knife or razor blade to cut the tube to avoid damaging the wires.**
- **This may be performed on either end of the inflator.**

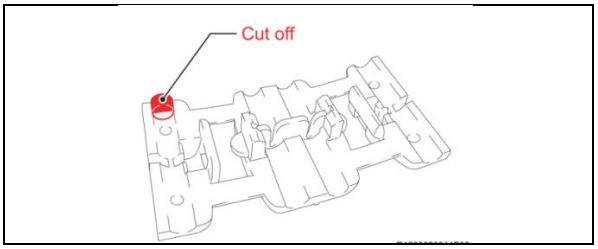

b) Cut off the tab of the electro tap shown in the illustration.

NOTE: The electro tap is included in the inflator parts kit.

This tab *MUST* be removed to ensure a good short.

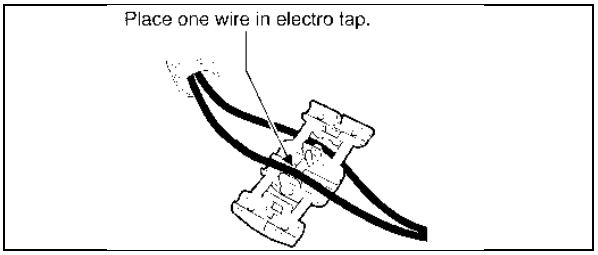

3. CREATE A NEW SHORT CIRCUIT IN THE INFLATOR HARNESS

a) Place one wire in the electro tap as shown in the illustration.

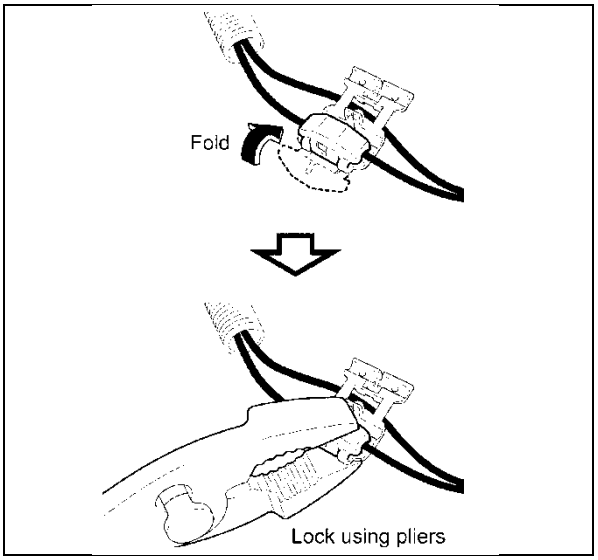

b) Fold and pinch the half of the electro tap with the wire and use pliers to lock the electro tap.

NOTE:

- ***DO NOT* work on both wires at the same time to avoid errors.**
- **Pliers *MUST* be used to confirm the electro tap is firmly locked in place.**

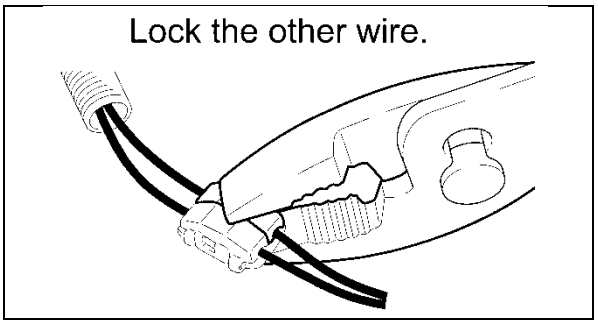

c) Set the other wire in the electro tap and lock it in place using pliers.

STOP ***DO NOT* measure resistance of the inflator wires, this may cause accidental activation.**

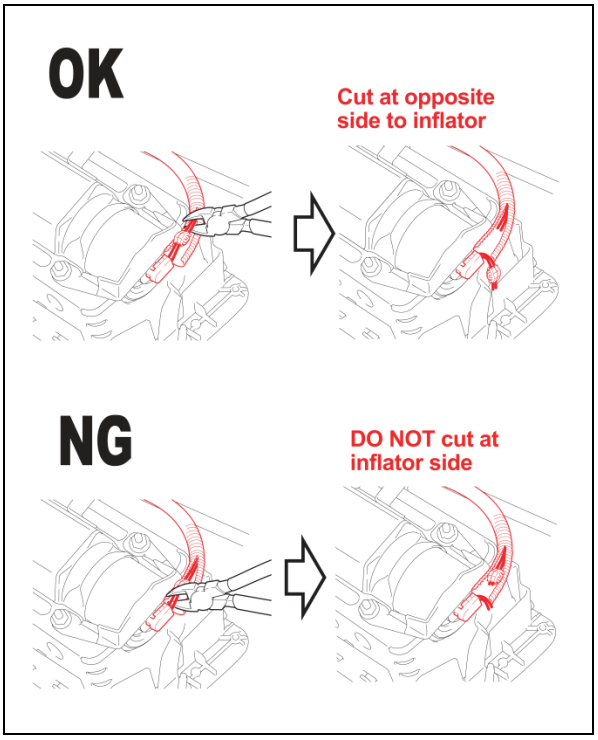

4. CUT THE INFLATOR WIRES

a) Cut the 2 wires at the side of the electro tap that is farthest away from the inflator.

Cut the wires opposite the inflator

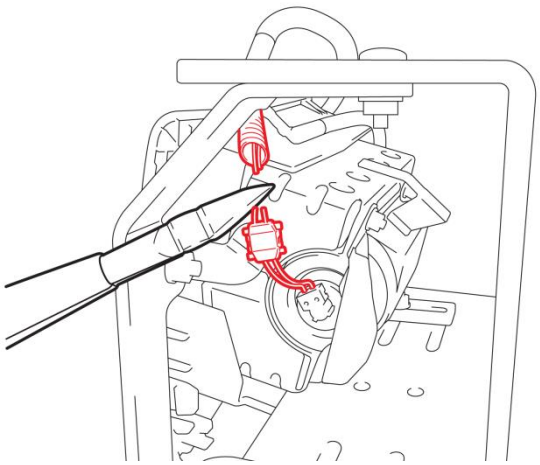

STOP ***DO NOT* measure resistance of the inflator wires, this may cause accidental activation.**

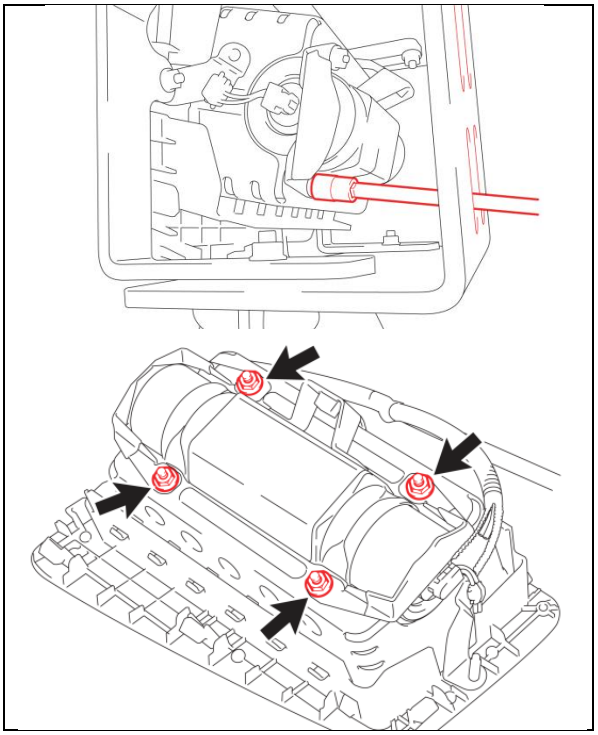

5. REMOVE THE SELF LOCKING NUTS

a) Use the access holes in the bracket to remove the 4 nuts.

NOTE:

- ***DO NOT* use power tools.**
- **The bracket support bars may need to be repositioned to remove the nuts through the access holes.**

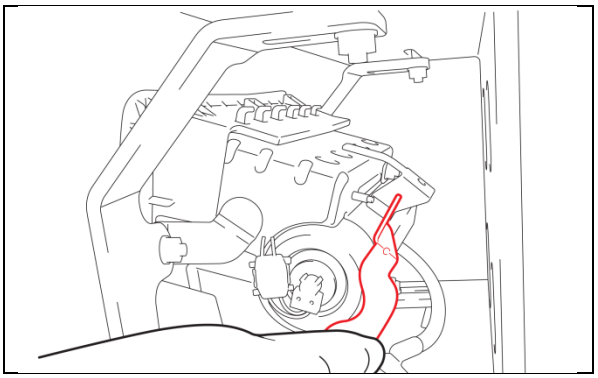

b) Remove the stopper plates.

c) Discard the 4 nuts and 2 stopper plates as they are not to be reused.

NOTE: *DO NOT* reuse the old nuts, new nuts *MUST* be used.

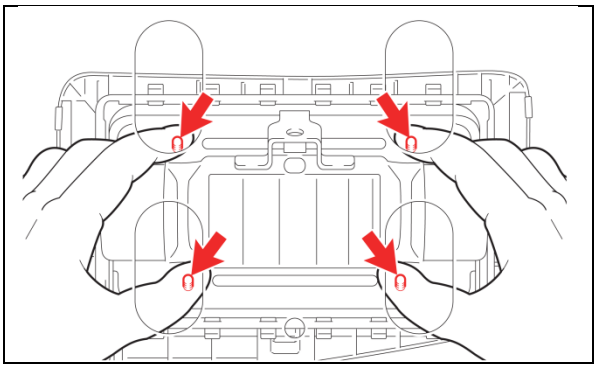

6. REMOVE THE INFLATOR

a) Gently push in the 4 studs to loosen the inflator for removal.

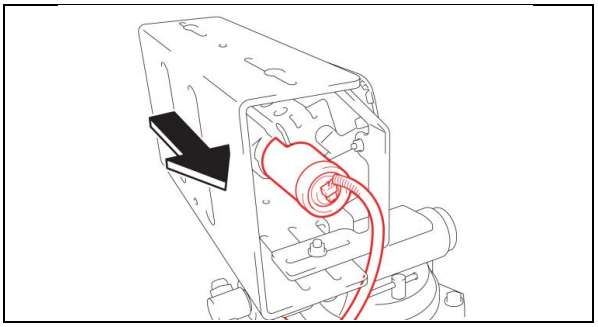

b) Remove the inflator from the airbag assembly and place it on a safe work surface.

7. SCAN THE OLD AND NEW INFLATOR SERIAL NUMBER

a) Scan the ***OLD*** inflator serial number and mark the old inflator so that it will not be reused.

b) Scan the ***NEW*** inflator serial number.

NOTE: This information is *CRITICAL*

- **It is used to confirm the correct inflator is removed from the vehicle.**
- **It is recorded by TMS to trace the return parts shipment.**
- **It is used to track the new inflator that is being installed on the vehicle.**

Step a) Old Inflator

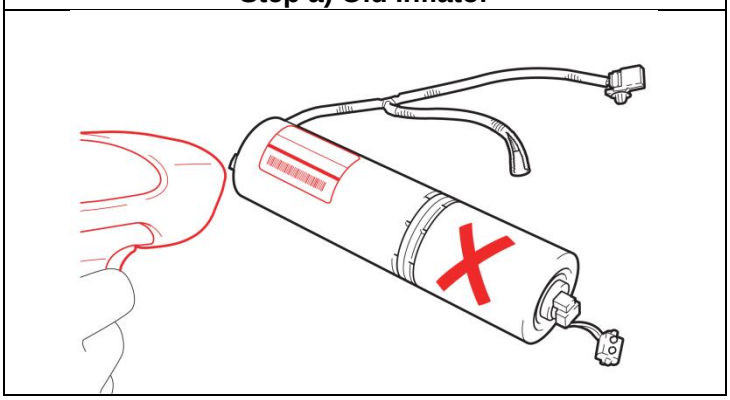

Step b) New Inflator

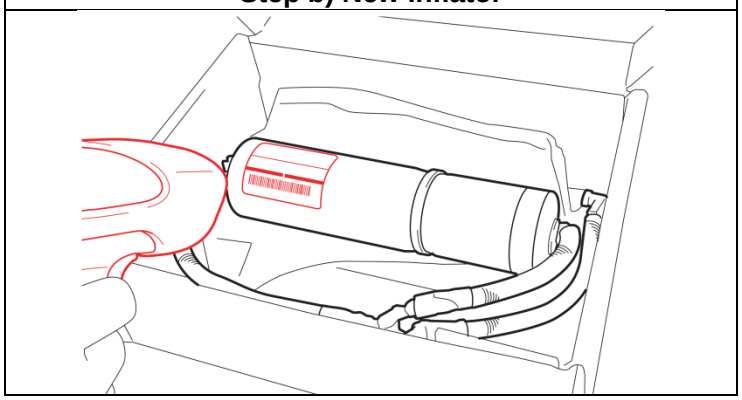

c) Confirm agreement by checking the two boxes.

d) Record the Warranty Authorization # to be included in the warranty claim.

e) Place the old inflator in the parts box and take it immediately to the parts department.

NOTE:

- **Confirm the cursor is in the correct serial number input box before scanning.**
- **If the serial number barcode will not scan, it can be entered manually.**
- **If there are any difficulties or concerns with this process, email quality_compliance@toyota.com with details.**

Step c)

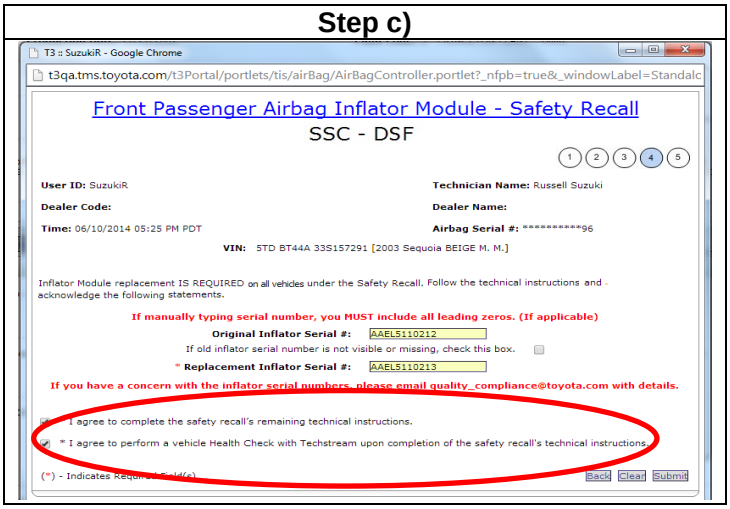

Step d)

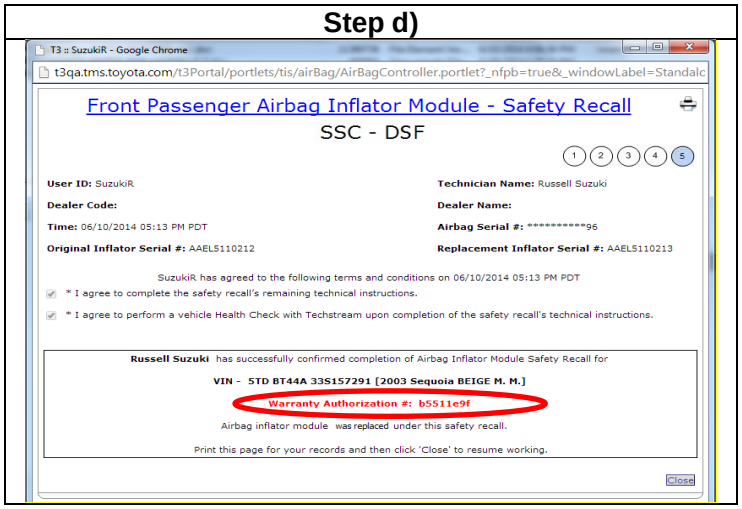

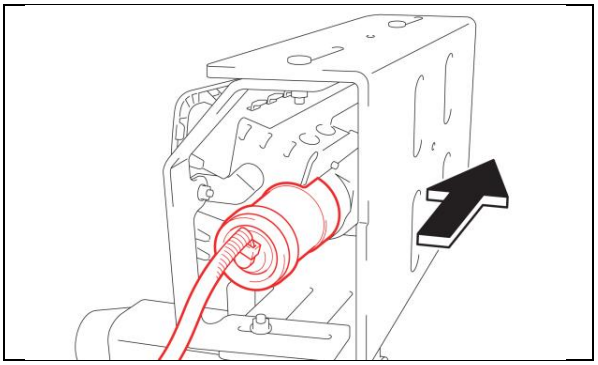

8. INSTALL THE *NEW* INFLATOR

a) Carefully slide the new inflator into the airbag assembly.

> STOP
> - ***DO NOT* connect the inflator harness at this time. It is *CRITICAL* to install the plates first to confirm the inflator is installed in the correct position before connecting the harness.**

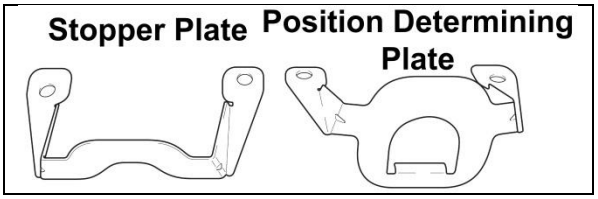

9. CONFIRM THE *NEW* PLATES

a) Confirm the identification of the stopper plate and the position determining plate, ***THEY ARE DIFFERENT.***

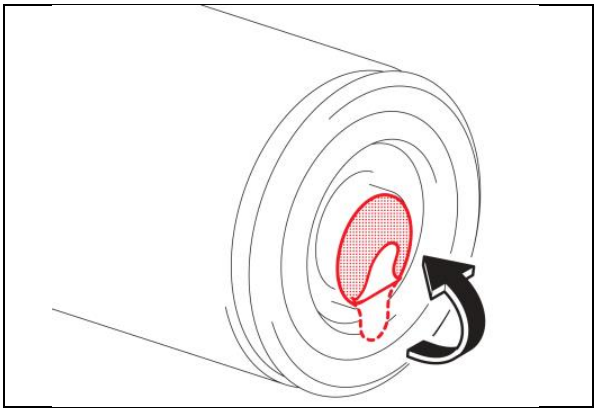

10. FOLD THE CONNECTOR SEAL

a) Fold the seal in order to prevent it from being caught under the position determining plate in the next step.

NOTE: *DO NOT* fully remove the seal until just before connecting the harness.

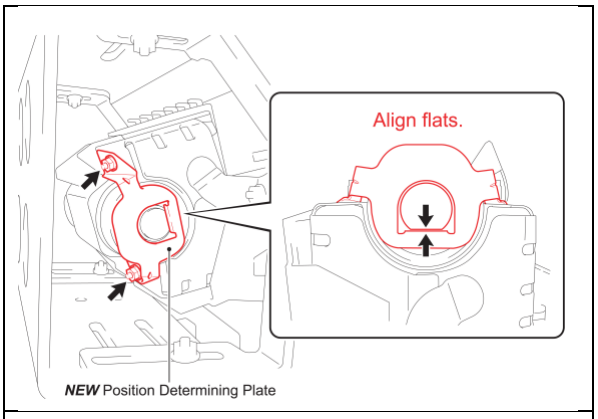

11. INSTALL THE *NEW* POSITION DETERMINING PLATE

a) Place the ***NEW*** position determining plate on the airbag assembly on the side with the connector seal.

b) Install ***NEW*** nuts by hand.

> STOP
> - **Confirm the flats on the position determining plate and inflator are aligned.**
> - ***DO NOT* pinch the harness between the inflator and the plate.**

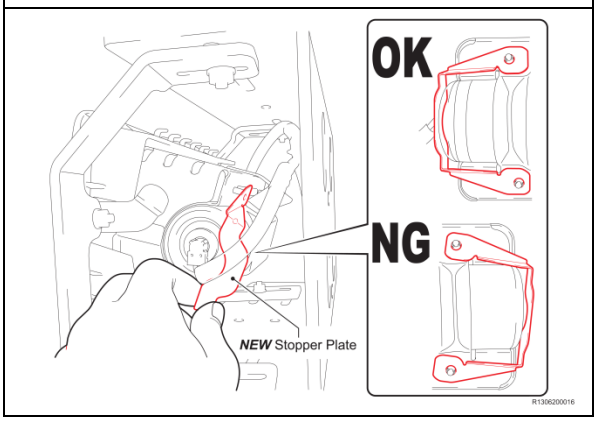

12. LOOSELY INSTALL A NEW STOPPER PLATE.

a) Place the ***NEW*** stopper plate on the airbag assembly on the side where the harness is already connected.

b) Confirm the end of the inflator sits flat against the stopper plate. If they do not align the inflator is installed backward.

c) Install NEW stopper plate nuts by hand. They will be torqued on a later step.

> STOP
> - **Confirm the stopper plate to inflator fitment is correct.**
> - ***DO NOT* pinch the harness between the inflator and the stopper plate.**

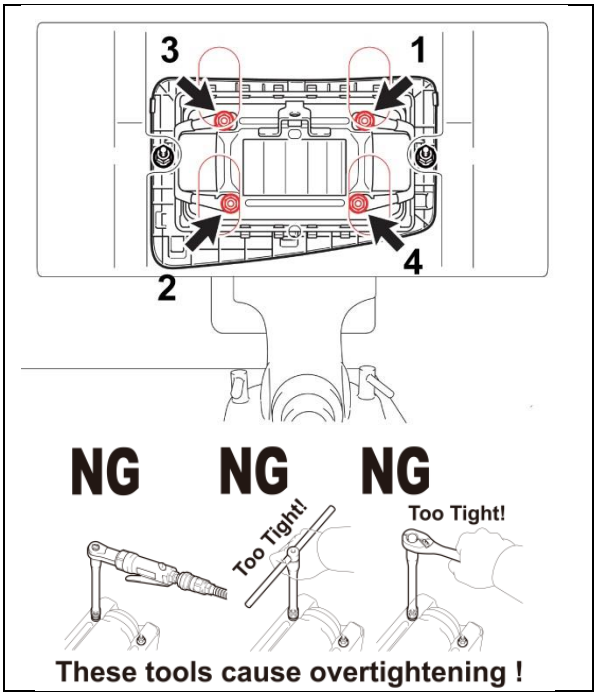

13. TORQUE THE PLATE NUTS

a) Tighten the nuts evenly in two increments following the sequence shown in the illustration. Use a socket driver or torque wrench to tighten the nuts.

Torque: 35in. lbf (3.9N·m)

STOP

- **There will be some resistance when tightening the nuts because they are self-locking, confirm the nuts are tightened correctly.**
- ***DO NOT* use a power tool, T-handle, or ratchet when tightening the nuts to avoid over torqueing.**

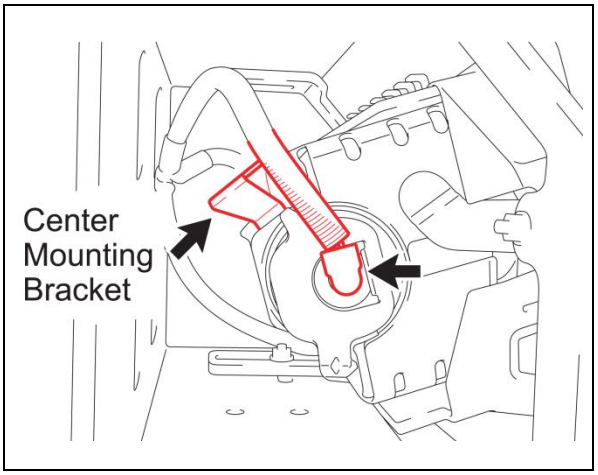

14. CONNECT THE INFLATOR CONNECTOR

a) Remove the connector seal from the inflator.

b) Confirm the alignment of the harness connector as shown in the illustration, then connect the harness. The connector wires should lead toward the center mounting bracket on the airbag assembly.

STOP

- **The connector should be connected *IMMEDIATELY* after removing the seal.**
- **The connector is one-way, once it is installed it *CANNOT* be removed.**
- **If the connector is installed in the incorrect orientation the terminals may be bent or the connector may not fully engage.**

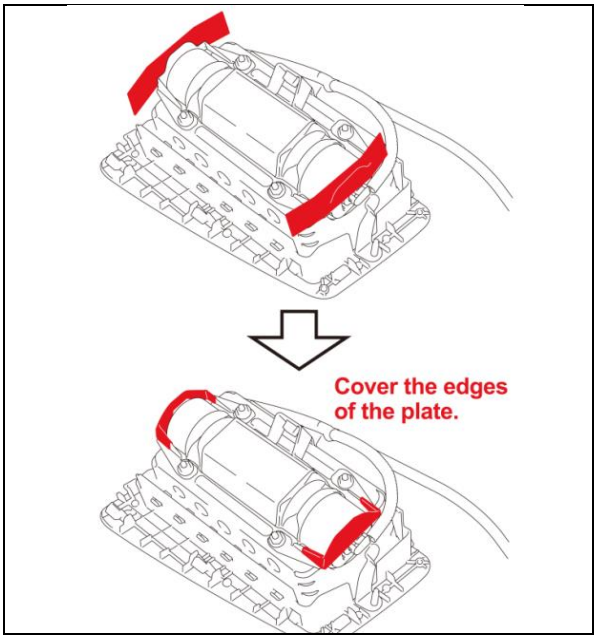

15. REMOVE THE AIRBAG ASSEMBLY FROM THE BRACKET

a) Remove the two nuts and the airbag assembly, then place the assembly on a cloth or the anti-static mat if it being used.

16. ATTACH THE FELT TAPE

a) Attach the felt tape to the edges of the stopper and position determining plate.

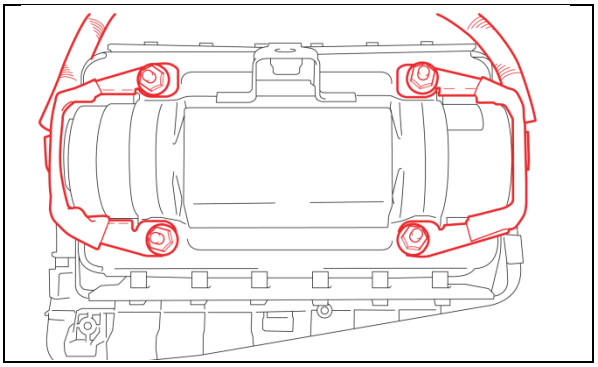

17. INSPECT THE AIRBAG BEFORE INSTALLATION

a) Confirm that the 4 ***NEW*** plate nuts are installed and tight.

b) Confirm the ***NEW*** stopper and position determining plates are installed.

c) Confirm the flats on the position determining plate and inflator are aligned.

d) Confirm the orientation of the inflator wire harness.

IX. FRONT PASSENGER AIRBAG ASSEMBLY INSTALLATION

1. REINSTALL THE AIRBAG ASSEMBLY

Note: During reinstallation of the airbag assembly, ensure the 12mm bolt and two 10mm nuts securing the airbag assembly to the instrument panel are installed and torqued to the required specification identified on TIS.

a) Refer to TIS for instructions on airbag installation: **Corolla**, **Matrix**

2. RECONNECT THE NEGATIVE BATTERY CABLE

3. PERFORM A HEALTH CHECK AND DIAGNOSTIC REPORT

◄ VERIFY REPAIR QUALITY ►

- **Confirm all precautions are follow to ensure safety during the repair**
- **Confirm the entire serial number checker application is completed and the warranty authorization # is recorded on *EVERY* vehicle**
- **Confirm the old inflator is handled safely and given to the appropriate parts professional for shipment**
- **Confirm the inflator harness connector is fully engaged and that the stopper plate and position determining plate are installed correctly**

If you have any questions regarding this update, please contact your regional representative.

X. APPENDIX

A. CAMPAIGN DESIGNATION DECODER

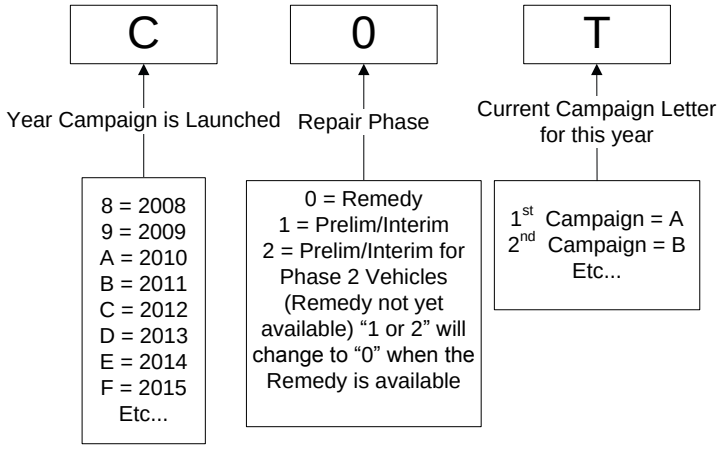

B. CAMPAIGN PARTS DISPOSAL

Video Supplement: Parts Handling

ALL inflators that are removed from vehicles under this campaign ***MUST*** be packaged and shipped back to the inflator manufacturer following the manufacturer's instructions. The instructions can be found in the following locations:

- Attached to the dealer letter
- Included in the parts box
- On the laminated aid that was provided at the launch of the campaign