November 18, 2014 ATB 51971-01106 REV4 (1411)

Recall: Driver's Airbag Inflator May Produce Excessive Pressure After Long-Term Exposure to High Absolute Humidity

Supersedes 14-045, dated November 12, 2014, to revise the information highlighted in yellow

AFFECTED VEHICLES

Year	Model	Trim	VIN Range
2001–07	Accord	ALL	Check the iN VIN status for eligibility
2001–05	Civic	ALL	Check the iN VIN status for eligibility
2001–05	Civic GX	ALL	Check the iN VIN status for eligibility
2003–05	Civic Hybrid	ALL	Check the iN VIN status for eligibility
2002–06	CR-V	ALL	Check the iN VIN status for eligibility
2003–11	Element	ALL	Check the iN VIN status for eligibility
2002–04	Odyssey	ALL	Check the iN VIN status for eligibility
2003–07	Pilot	ALL	Check the iN VIN status for eligibility
2006	Ridgeline	ALL	Check the iN VIN status for eligibility

REVISION SUMMARY

A note was added and a failed part number was changed in WARRANTY CLAIM INFORMATION.

BACKGROUND

Certain Honda vehicles operated in areas known for high absolute humidity and high heat may contain a driver's airbag that, over time, may be affected by exposure to the humidity, which could produce excessive internal pressure upon deployment. If an affected airbag deploys, the increased internal pressure may cause the inflator casing to rupture. Metal fragments could pass through the airbag cushion material, possibly causing injury or fatality to vehicle occupants.

Affected Honda vehicles were originally sold and/or registered in the following geographic locations: Alabama, California, Florida, Georgia, Hawaii, Louisiana, Mississippi, South Carolina, Texas, Puerto Rico, and the U.S. Virgin Islands.

CUSTOMER NOTIFICATION

Owners of affected vehicles will receive a notification of this campaign.

Do an iN VIN status inquiry to make sure the vehicle is shown as eligible.

Some vehicles affected by this campaign may be in your used vehicle inventory. These vehicles must be repaired before they are sold.

Should your dealership sell an unrepaired vehicle that subsequently causes injury or damage because of the recalled item, the dealership will be solely responsible to the damaged party, and will be required to defend and indemnify American Honda for any resulting claims. To see if a vehicle in inventory is affected by this recall, do a VIN status inquiry before selling it.

CORRECTIVE ACTION

Replace the driver's airbag inflator, then return the original, undeployed inflator as directed.

CUSTOMER INFORMATION: The information in this bulletin is intended for use only by skilled technicians who have the proper tools, equipment, and training to correctly and safely maintain your vehicle. These procedures should not be attempted by "do-it-yourselfers," and you should not assume this bulletin applies to your vehicle, or that your vehicle has the condition described. To determine whether this information applies, contact an authorized Honda automobile dealer.

© 2014 American Honda Motor Co., Inc. – All Rights Reserved

PARTS INFORMATION

NOTE: Always use new Torx bolts to reinstall the airbags. The new Torx bolts are coated with threadlock to make sure they do not come loose.

Part Name	Part Number	Quantity
2001–02 Accord Driver's Airbag Inflator Kit	04770-S5A-305	1
2003–07 Accord Driver's Airbag Inflator Kit	04770-SDA-305	1
2001–05 Civic (includes GX and Hybrid) Driver's Airbag Inflator Kit	04770-S5A-305	1
2002–06 CR-V Driver's Airbag Inflator Kit	04770-S9A-306	1
2003–11 Element Driver's Airbag Inflator Kit	04770-SCV-306	1
2002–04 Odyssey Driver's Airbag Inflator Kit	04770-S5A-305	1
2003–07 Pilot Driver's Airbag Inflator Kit	04770-S9A-306	1
2006 Ridgeline Driver's Airbag Inflator Kit	04770-SJC-306	1
Torx Bolts (For reinstalling Autoliv airbags only)	90134-S04-A81	2

NOTE:

- The inflator kit box must be used to return the old inflator to its supplier, ideally within 48 hours of the repair. Be careful not to damage the inflator kit box.
- If the defective, undeployed inflator is not returned, the warranty claim for that vehicle will be charged back to your dealership.
- Follow the shipping instructions supplied with the inflator kit. If you have any questions about shipping, call Warranty Parts Inspection (WPI) at **937-642-2737**.

WARRANTY CLAIM INFORMATION

NOTE:

- **Use the Autoliv claim for removing and installing Autoliv airbags only**. Do not use it to claim any labor on Takata airbags.
- To avoid non-payment of warranty claims, the serial number on the box of the new airbag inflator must be entered in the Diagnostic Trouble Codes field on each warranty claim. For more information, refer to step 2 of REPAIR PROCEDURE.
- To avoid a warranty claim being charged back to your dealership, the defective, undeployed inflator must be returned to its supplier. Follow the shipping instructions supplied with the inflator kit. If you have any questions about shipping, call Warranty Parts Inspection (WPI) at **937-642-2737**.

Year/Model	Operation Number	Description	Flat Rate Time	Defect Code	Symptom Code	Template ID	Failed Part Number
2001–02 Accord	7521H1	Replace the driver's airbag inflator.	0.5 hr	5VZ00	JJ500	14-045A	06770-SDA-A80ZA
2003–07 Accord	7521H1		0.5 hr	5VZ00	JJ500	14-045B	06770-SDA-A80ZA
2001–05 Civic	7521H1		0.5 hr	5VZ00	JG700	14-045C	06770-S5A-A10ZA
2001–05 Civic GX	7521H1						
2003–05 Civic Hybrid	7521H1						
2002–06 CR-V	7521H1		0.5 hr	5VZ00	JG800	14-045D	06770-S9A-A80ZA
2003–11 Element	7521H1		0.5 hr	5VZ00	JG900	14-045E	06770-SCV-A80ZA
2002–04 Odyssey	7521H2		0.5 hr	5VX00	JH000	14-045F	06770-S0X-A10ZA
2003–07 Pilot	7521H2		0.5 hr	5VX00	JH100	14-045G	06770-S9V-A01ZA
2006 Ridgeline	7521H2		0.5 hr	5VX00	JH200	14-045H	06770-SJC-A10ZA
2001–05 Civic	7525A9	Remove and reinstall the Autoliv airbag.	0.3 hr	5VZ00	JG700	14-045J	06770-S5A-A10ZA

Skill Level: Repair Technician

REPAIR PROCEDURE

NOTE:

- Be careful not to damage any parts when replacing the inflator, and **follow the procedure exactly**.
- If, before removing the airbag, you suspect that it may be the incorrect airbag for the vehicle or a counterfeit, **do not remove the airbag**. Contact your DPSM for assistance.
- Do not open the inflator kit until you have confirmed a Takata inflator is installed in the vehicle because if you have to return the inflator, the kit must be unopened.
- If the vehicle you are working on has an Autoliv airbag and inflator, **do not disassemble the airbag** because the inflator cannot be reinstalled, and you will have to replace the airbag module.

1. Remove the driver's airbag.
2. Write down the serial number located on the right side of the new inflator's box. For the warranty claim to be paid, your warranty clerk must enter this serial number in the Diagnostic Trouble Codes field on the warranty claim.

3. Place the airbag, face down, on a clean shop towel.
4. Visually inspect the airbag and the inflator for any unusual writing or markings.
   - If there is nothing unusual about the airbag or the inflator, go to step 5.
   - If there are any unusual markings, like an incorrect label or a model year written in marker, the airbag and inflator may not be the correct airbag and/or inflator for the vehicle or it may be a counterfeit part. For more information about counterfeit airbags, you can refer to *safercar.gov*, enter keywords **MANAGING COUNTERFEIT**, and select **Recommended Dealer Guidance for Managing Counterfeit Air Bags** from the list. **If you suspect that the airbag or inflator is counterfeit, do not continue this procedure**. Contact your DPSM for assistance.

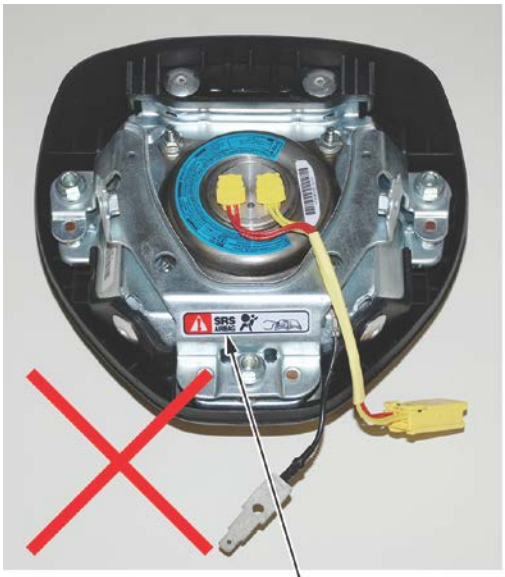

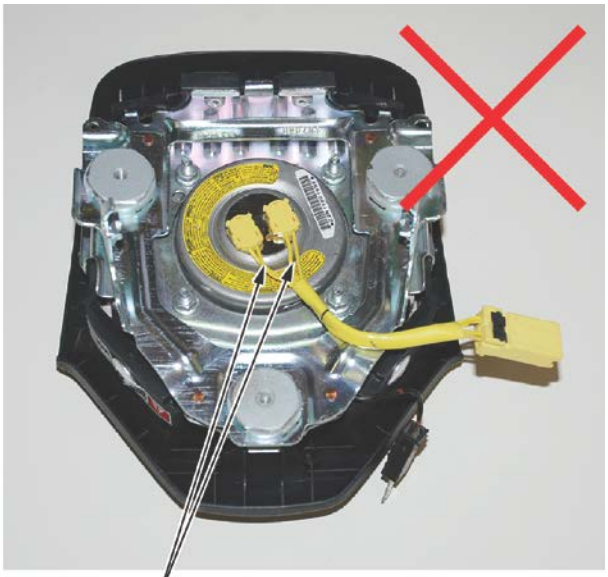

5. ***Civic only*** - Determine if the airbag is made by Autoliv or Takata by comparing the inflators to those in the images below.

   NOTE: The Autoliv serial number label is different from the Takata label; the Autoliv has 11 characters, the Takata has 9.

   - If the airbag is made by Autoliv, the airbag is OK. Reinstall the airbag using new Torx bolts. If you already received a replacement inflator, return the unopened kit to American Honda.
   - If the airbag is made by Takata, go to step 6.

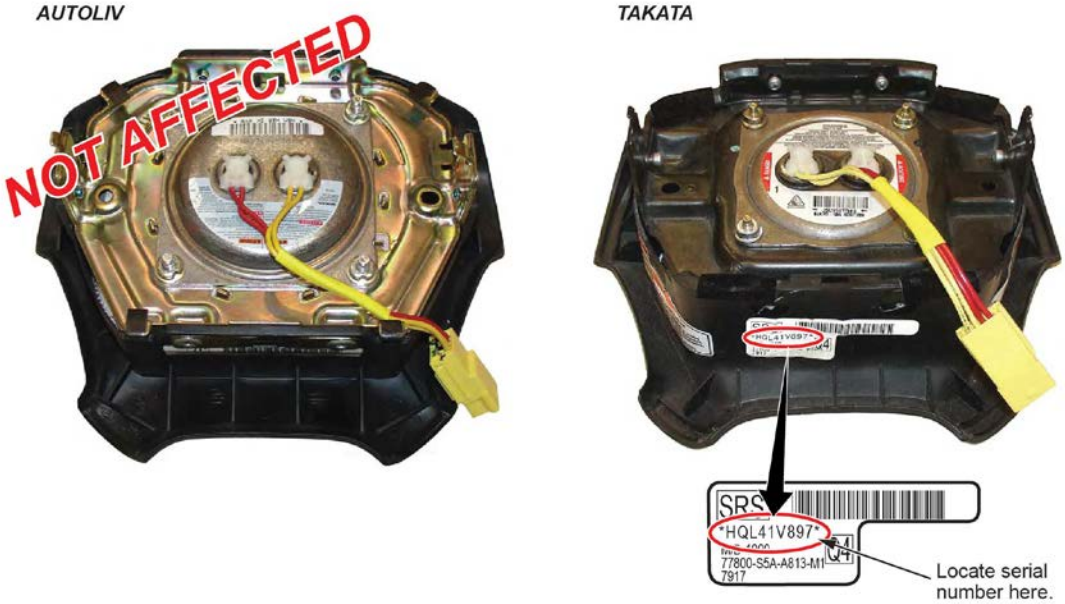

6. If there is no horn plate installed, go to step 7. If there is a horn plate installed, remove the four horn plate mounting bolts, the mounting bolt felt washers, the horn plate, and remove the felt tape covering the lower two inflator locknuts. The felt washers and felt tape will not be reused.

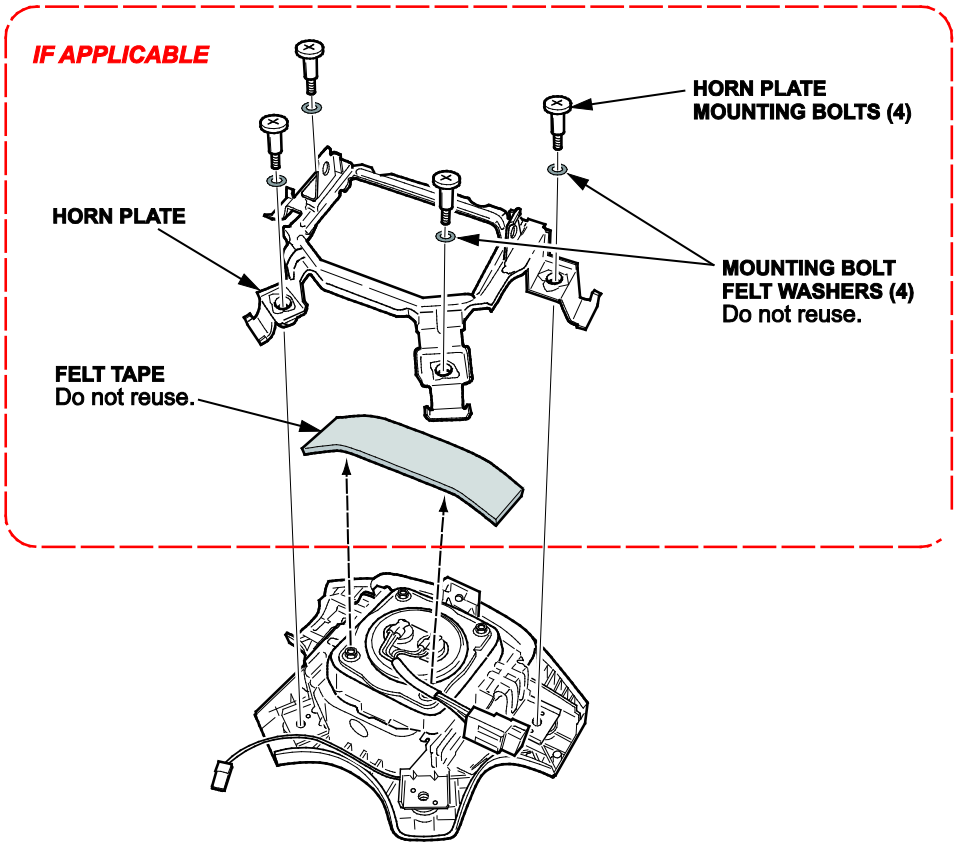

7. Using needle-nose vise grips or a 3/8 in. 6-point socket, remove the four locknuts from the inflator. The locknuts will not be reused.

   NOTE: Do not remove the inflator from the airbag until you complete step 7.

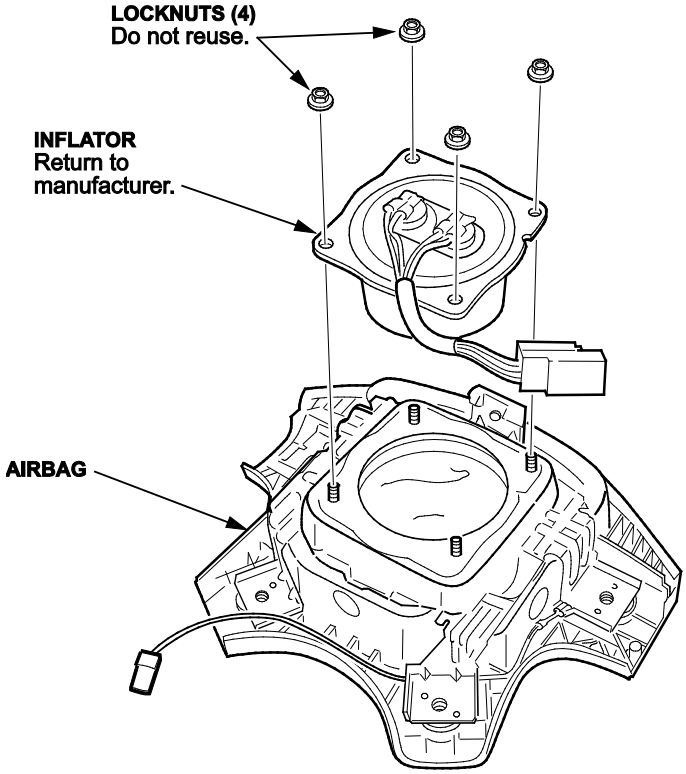

8. Use shop air to clean any debris that may be on the inflator, then remove the inflator from the airbag.

   NOTE:
   - Do not allow any debris to enter the inflator opening in the airbag.
   - Do not deploy the inflator. The inflator must be returned to its supplier in the box the new inflator came in. Follow the shipping instructions supplied with the inflator kit. If you have any questions about shipping, call Warranty Parts Inspection (WPI) at **937-642-2737**.

9. Turn over the airbag (inflator side down), and shake it to remove any debris from the inflator opening.

10. Install the new inflator in the airbag with new locknuts. Torque the locknuts to **3.9 N·m (2.8 lb-ft, 34 lb-in)**.

    NOTE:
    - The new inflator is slightly different than the original inflator, but they are still interchangeable.
    - There may be some minor surface rust or corrosion on the new inflator; this is OK.

11. If applicable, cover the lower two inflator locknuts with new felt tape.

12. If applicable, reinstall the horn plate with new felt washers on its mounting bolts. Torque the mounting bolts to **3.4 N·m (2.5 lb-ft, 30 lb-in)**, then make sure the horn plate moves freely.

13. Reinstall the driver's airbag using new Torx bolts.

14. Give your warranty clerk the inflator serial number you wrote down in step 2. For the warranty claim to be paid, your warranty clerk must enter the appropriate serial number in the Diagnostic Trouble Codes field on the warranty claim.

END