IMPORTANT UPDATE

TECHNICAL INSTRUCTIONS

FOR

SAFETY RECALL E04

FRONT PASSENGER AIRBAG INFLATOR MODULE

CERTAIN 2003 – 2005 MODEL YEAR TUNDRA

Updated 10-24-14

Updated 10-24-14

- **The TI has been updated to reflect the new revisions made to the Serial Number Recording Application that will go live on TIS the morning of 10-25-14. The revision to the application require the following information to be entered:**
  - **Vehicle mileage is now required to be inputted into the serial number recording application**
  - **In the rare case that the passenger airbag assembly is replaced (region approval required), the new airbag serial number must be recorded using the serial number recording application**
  - **The serial number recording application has also been revised to identify which part was replaced on A specific vehicle on the warranty authorization code screen**

Updated

- **The TI parts section has been revised to include the appropriate inflator kit part numbers for both the Continental U.S. and USTT/Hawaii.**

Note: 2005 MY vehicles equipped with Occupant Classification Systems require a different inflator (2- stage) that is not available at this time. TMS is currently preparing parts for these vehicles.

All dealership associates involved in the recall process are required to successfully complete E-Learning course SC13A. To ensure that all vehicles have the repair performed correctly; technicians performing this recall repair are required to have successfully completed E-Learning course SC13B, in addition to SC13A, and currently hold <u>at least one</u> of the following certifications levels:

- **Toyota Expert (Electrical)**
- **Master**
- **Master Diagnostic Technicians**

NOTE: The videos in this document were created for D0F/DSF, but are used in this document to help supplement the technical instructions.

I. OPERATION FLOW CHART

The flow chart is for reference only. *DO NOT* use it in place of the full technical instructions. Follow *ALL* steps as outlined in the full technical instructions to confirm the campaign is completed correctly.

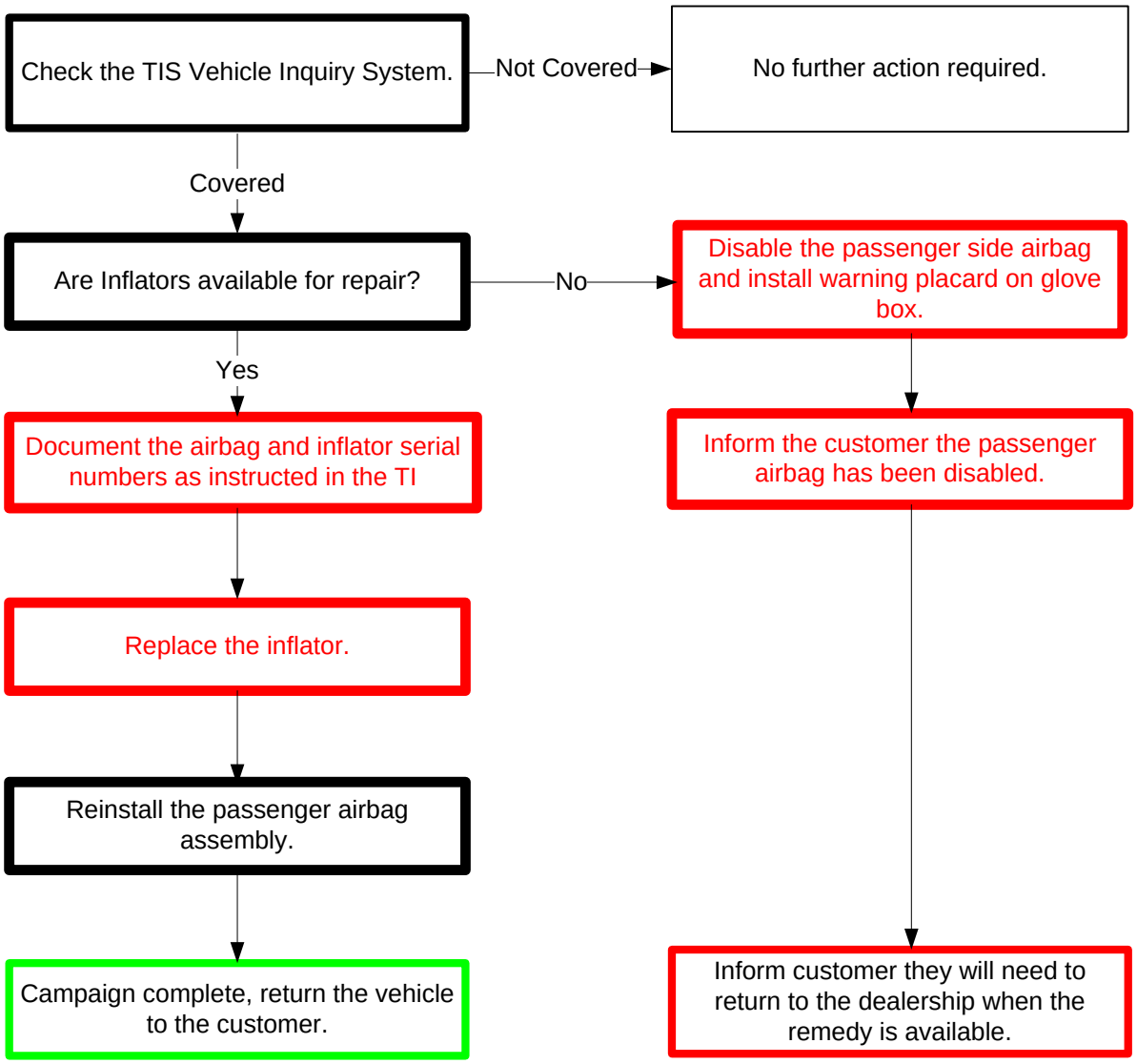

II. BACKGROUND

The subject vehicles are equipped with front passenger air bag assemblies. When located in areas with consistently high absolute humidity, the front passenger air bag inflator could be susceptible to rupture and the front passenger air bag could deploy abnormally in a crash, increasing the risk of injury to the occupant. The cause of the potential ruptured inflators and influence of high absolute humidity are under investigation.

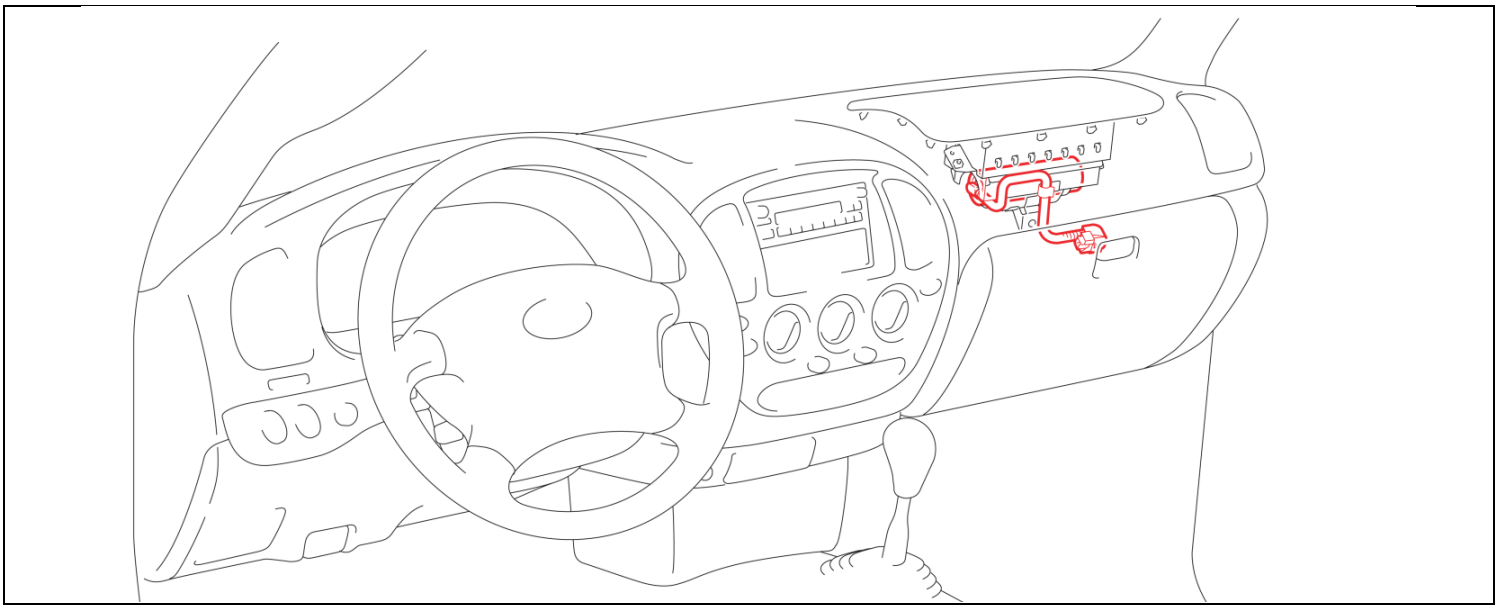

III. IDENTIFICATION OF AFFECTED VEHICLES

A. INVOLVED VEHICLES

- Check the TIS Vehicle Inquiry System to confirm the VIN is involved in this Safety Recall, and that the campaign has not already been completed prior to dealer shipment or by another dealer.
- **TMS warranty will not reimburse dealers for repairs conducted on vehicles that are not affected or were completed by another dealer.**

IV. PREPARATION

A. PARTS

Only one of the inflator part kits is required, ensure you pick the correct part number so that the correct return shipping information is provided in your kit for your location.

Applicable for: (2002 to 2004 MY) Continental U.S. (48 States)

Part Number	Part Description	Quantity
04003-2810C	2002-2004 MY, Instrument Panel Airbag Inflator Kit* (48 States in Continental U.S. & Alaska)	1

*The kit above includes the following parts.

	Inflator	1
	Self Locking Nut	4
	Electro Tap	1

Applicable for: (2002 to 2004 MY) USTT Locations and Hawaii

Part Number	Part Description	Quantity
04003-1110C	2002-2004 MY, Instrument Panel Airbag Inflator Kit* (USTT Locations and Hawaii)	1

*The kit above includes the following parts.

	Inflator	1
	Self Locking Nut	4
	Electro Tap	1

Applicable for: (2005 MY) Continental U.S. (48 States)

Part Number	Part Description	Quantity
TBD	2005 MY, Instrument Panel Airbag Inflator Kit* (48 States in Continental U.S.)	1

*The kit above includes the following parts.

	Inflator	1
	Self Locking Nut	4
	Electro Tap	1

Applicable for: (2005 MY) USTT Locations and Hawaii

Part Number	Part Description	Quantity
TBD	2005 MY, Instrument Panel Airbag Inflator Kit* (USTT Locations and Hawaii)	1

*The kit above includes the following parts.

	Inflator	1
	Self Locking Nut	4
	Electro Tap	1

B. Glove Box Reminder Hang Tags (MDC)

Glove Box hang tags are currently not available at the MDC, but a bulk shipment will be shipped directly to the dealer at the launch of the campaign.

Part Number	Part Description	Quantity
TBD	SRS Glove Box Reminder Hang Tag (English)	1
TBD	SRS Glove Box Reminder Hang Tag (Spanish)	1

C. TOOLS & EQUIPMENT

- Standard hand tools
- Molding remover set
- Torque wrench
- Techstream
- Electrical Tape
- Zip Tie

***OPTIONAL* SST** – This is an essential special service tool that the dealership should have. This tool is not mandatory when performing this repair.

Part Number	Part Name	Quantity
09890-47010-01	Anti-Static Mat Set	1

E04 CAMPAIGN TOOLS – These tools where previously provided to the dealership for campaign D0F and will be used for campaign E04. These tools are required when performing this repair.

Image	Name	Quantity
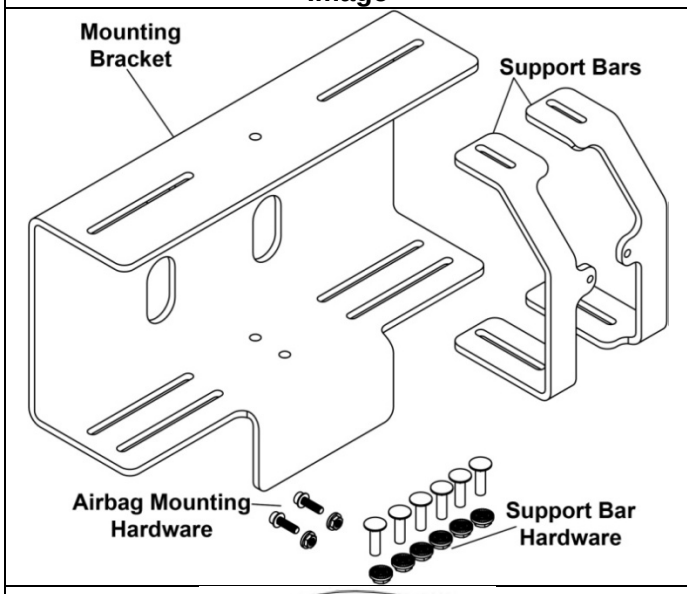	Airbag Mounting Bracket & hardware	1
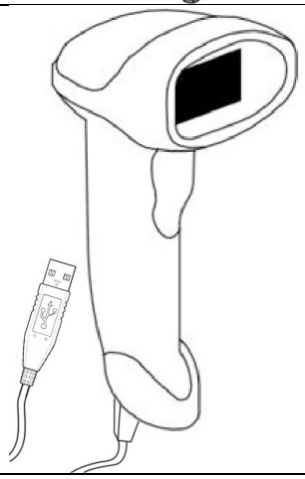	Barcode Scanner	1

NOTE: These tools *CANNOT* be ordered through the parts or tools system. There is a very limited supply of tools, but if additional tools are needed, contact your regional representative.

V. SAFETY PRECAUTIONS

CRITICAL INFORMATION – READ THOROUGHLY

Failure to follow these procedures correctly could cause the SRS to unexpectedly deploy during servicing or the SRS may fail to operate correctly when required after reassembly. Confirm all work is performed as described in these instructions.

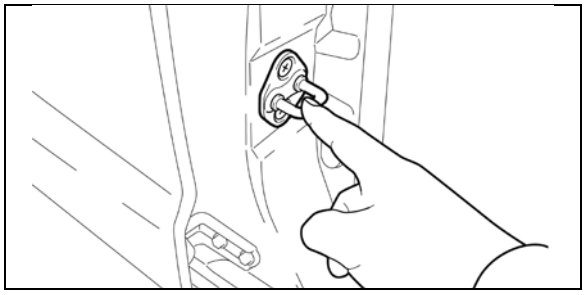

1. ELIMINATE STATIC ELECTRICITY

a) Before starting work and periodically while working on the vehicle, touch a metallic part of the vehicle to discharge static electricity in the body.

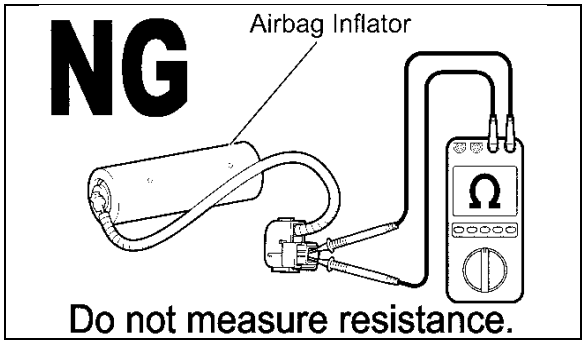

2. DO NOT MEASURE RESISTANCE

a) ***DO NOT*** measure resistance of airbag components, this may cause accidental activation.

3. HANDLE THE AIRBAG CAREFULLY

a) If an inflator is dropped, replace it with a ***NEW*** inflator.

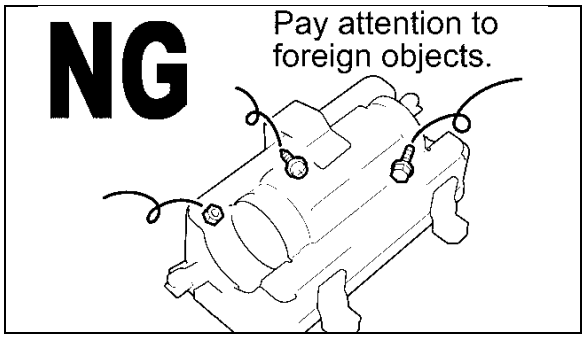

4. DO NOT ALLOW FOREIGN OBJECTS NEAR AIRBAG

a) Be sure to collect and account for all removed nuts/bolts to prevent them from landing in the airbag assembly.

b) Any foreign objects in the airbag assembly may cause damage or injury if the airbag is activated.

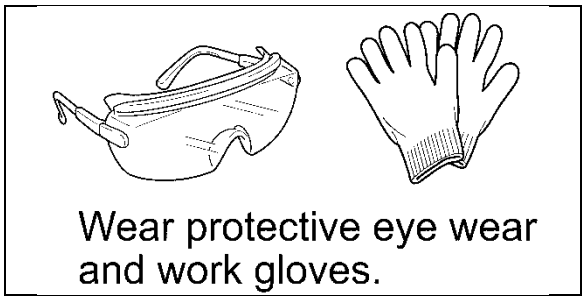

5. WEAR PROTECTIVE EQUIPMENT

a) Always wear appropriate protective equipment when working on the SRS.

VI. SRS SYSTEM HEALTH CHECK

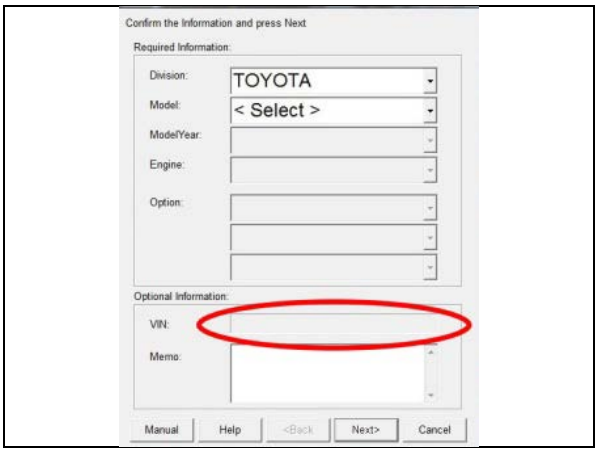

1. PERFORM A HEALTH CHECK

a) Confirm the Techstream is connected to the dealership's internet.

b) When launching the Techstream software the VIN ***MUST*** be entered manually.

NOTE: All letters of the VIN *MUST* be entered in ALL CAPS, or the VIN will need to be reentered when running the diagnostic report.

c) Perform a health check.

2. RUN A DIAGNOSTIC REPORT

a) After the health check has completed, run a diagnostic report by clicking on the link on the health check screen.

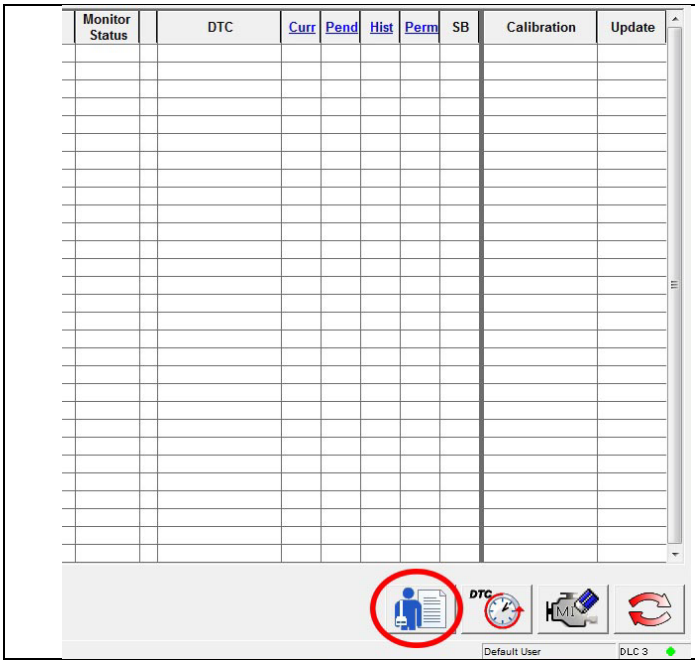

NOTE: If the VIN was not entered in ALL CAPS when Techstream was launched, an error will be displayed and there will be a prompt to reenter the VIN

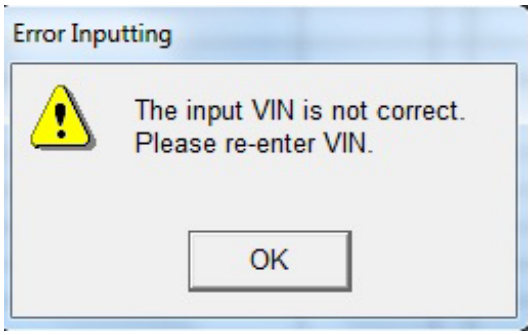

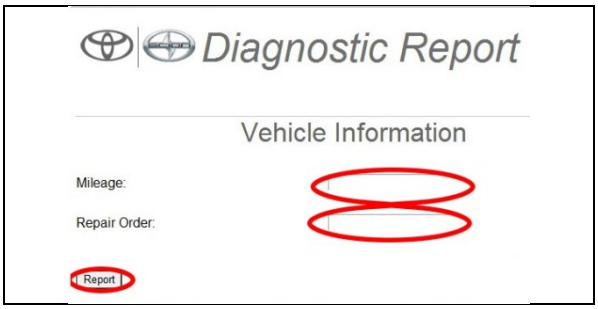

b) Enter the vehicle mileage and repair order information, then click the 'report' button.

- **The VIN *MUST* be entered manually in ALL CAPS when launching the Techstream software, the VIN *WILL NOT* auto-populate due to vehicle age.**
- **A health check and diagnostic report with VIN *MUST* be performed within the last 36 hours and recorded by TMS. If the diagnostic report is not run, the healthcheck will not be recognized by TMS.**
- **The serial number checker application will be disabled and the inspection cannot be completed if a health check and diagnostic report is not performed and recorded by TMS.**

VII. INFLATOR AVAILABILITY

1. **Is the inflator available to perform the vehicle repair?**

Availability	Action Required
YES	**Proceed to Section VIII to perform inflator replacement**
NO	**Proceed to Section XII to disable the airbag**

VIII. WORK AREA PREPARATION

CRITICAL INFORMATION – READ THOROUGHLY

The bracket assembly that was provided at the launch of SSC D0F is a critical added-safety feature that *MUST* be used when replacing the inflator module. Confirm the bracket assembly is installed securely in the vise and confirm the work area being used is appropriate. The anti-static mat set that is an essential SST may be available at your dealership and is optional to use during inflator replacement. If the anti-static kit is not available, before starting work and periodically while working on the vehicle, touch a metallic part of the vehicle to discharge static electricity in the body.

Confirm there are no loose objects or people exposed to the back side of the bracket for safety in the unlikely event of airbag deployment due to improper work procedures (Remember that the inflator ***IS NOT*** being replaced due to an inadvertent deployment concern).

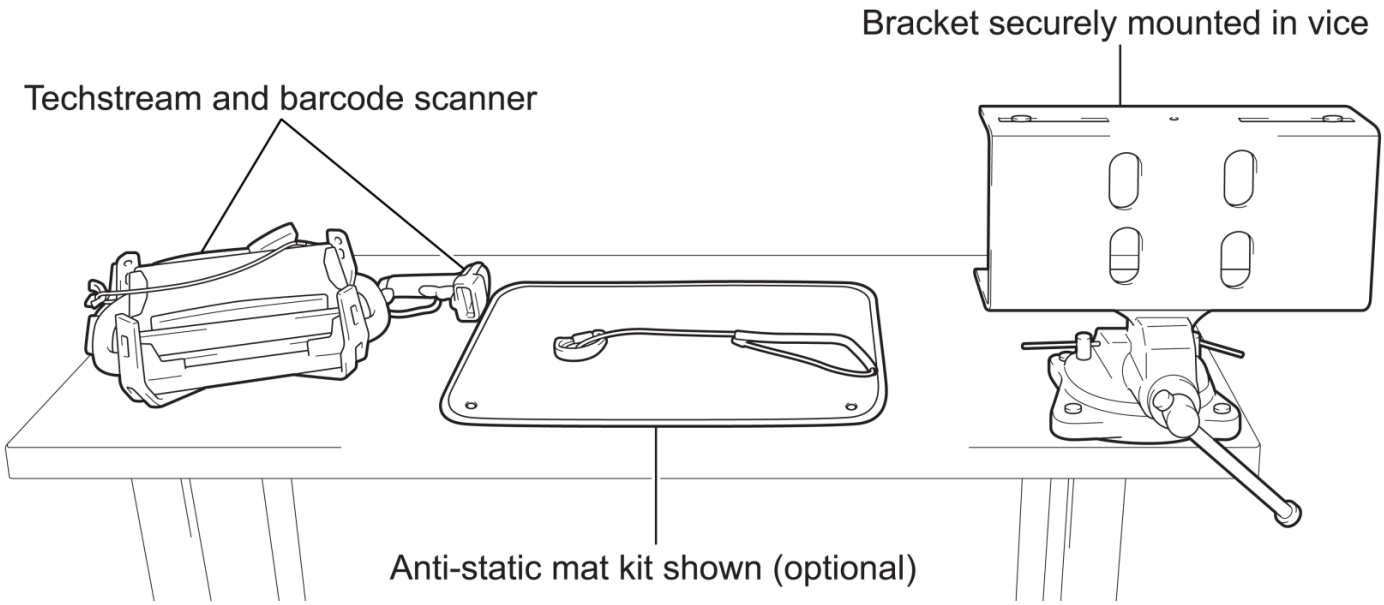

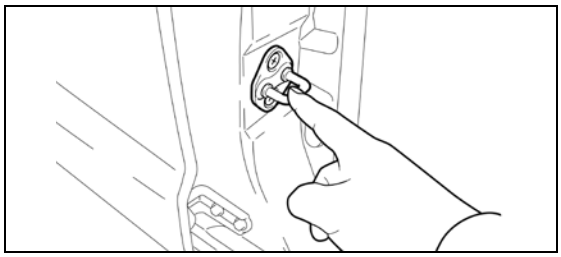

If the anti-static kit is not available, before starting work and periodically while working on the vehicle, touch a metallic part of the vehicle to discharge static electricity in the body.

IX. FRONT PASSENGER AIRBAG ASSEMBLY REMOVAL

1. DISCONNECT THE NEGATIVE BATTERY CABLE

- **Wait at least 90 seconds after disconnecting the cable from the negative battery terminal to prevent airbag and seat belt pre-tensioner deployment.**
- **Follow all precautions as outlined on TIS before servicing the SRS system.**

2. REMOVE THE PASSENGER AIRBAG ASSEMBLY

a) Refer to TIS for instructions on airbag removal: **Tundra**

Tundra Standard and Access Cab

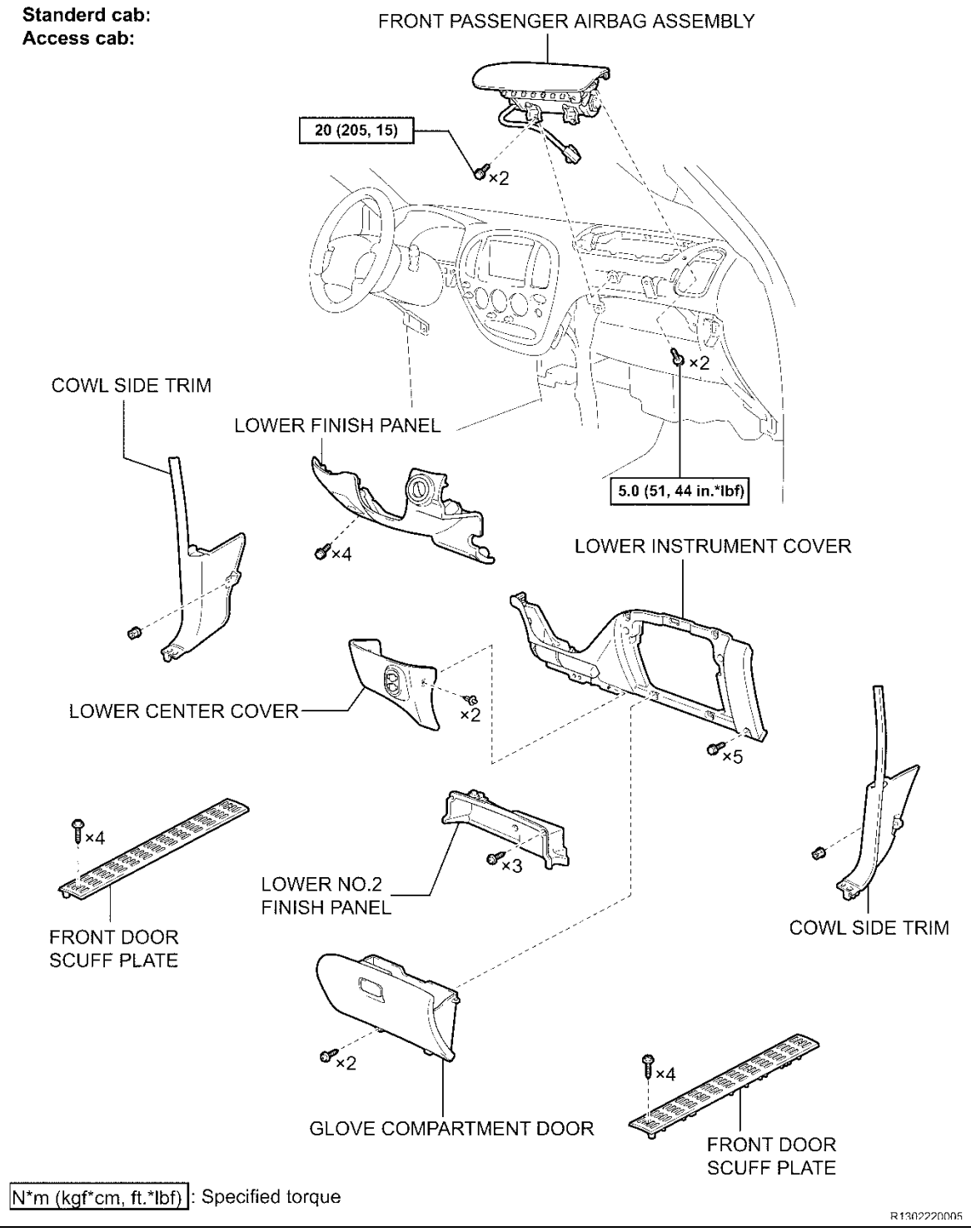

Tundra Double Cab

Double cab:

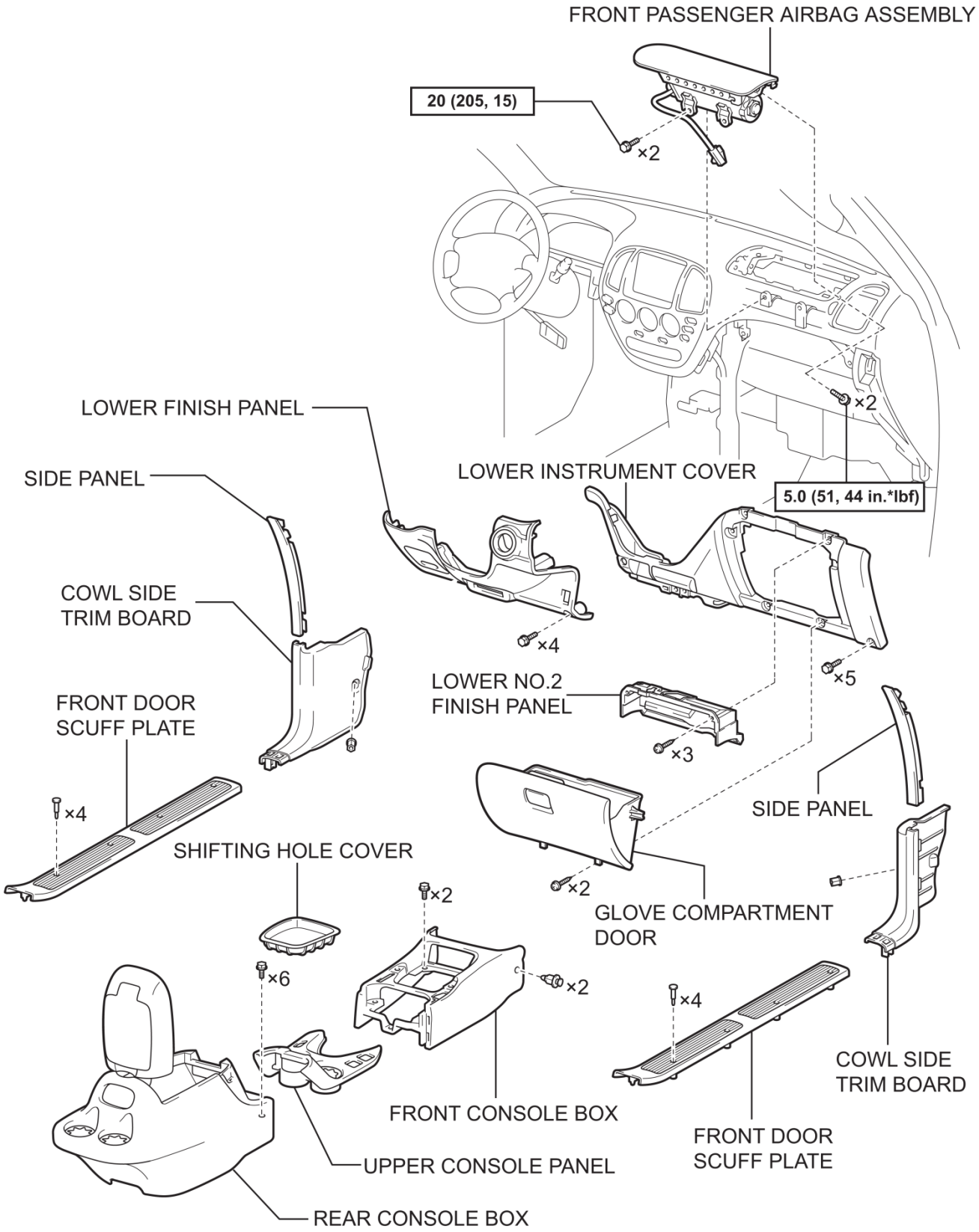

N*m (kgf*cm, ft.*lbf) : Specified torque

R1302220006

3. LAUNCH THE SERIAL NUMBER RECORDING APPLICATION

[Video Supplement: Serial Number Recording]

Note: The Serial Number Recording Application for E04 is the same application used for DSF.

- **The *AIRBAG ASSEMBLY, ORIGNAL INFLATOR, and NEW INFLATOR* serial numbers *MUST* be recorded using the barcode scanner (provided at the launch of SSC D0F).**
- **The barcode scanner application *MUST* be completed on every vehicle. These numbers *MUST* be included on every warranty claim that is submitted for inflator module replacement or the claim may be subject to debit.**
- **The technician performing the work *MUST* have valid TIS login credentials and an internet connection to perform the inspection and scanning process.**

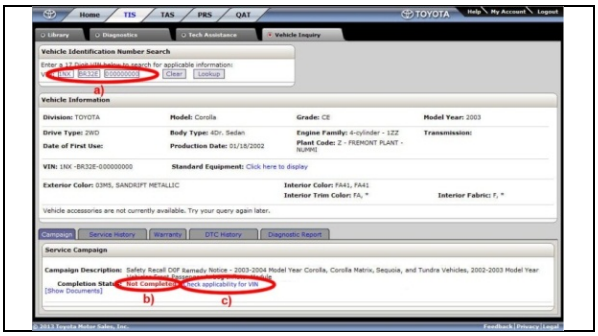

a) Log in to TIS and input the VIN of the vehicle in the Vehicle Inquiry tab.

b) Confirm the VIN is applicable and that the campaign has not been completed.

c) Click on the link to launch the serial number recording application.

d) Reenter TIS password in the serial number recording application.

NOTE: The person logged-in to TIS *MUST* be the person performing the repair.

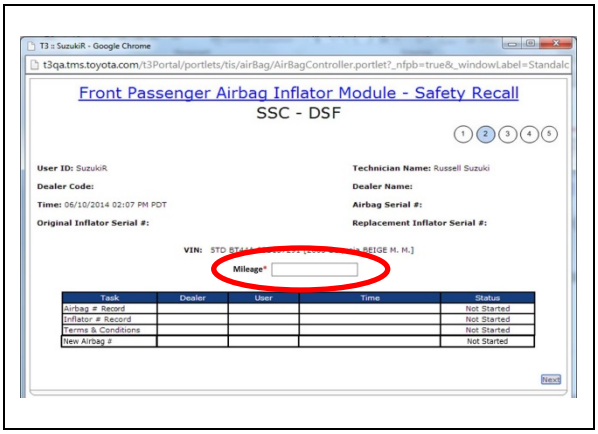

e) Record the vehicle mileage into the serial number recording application.

NOTE:

- **A task status screen will populate next and at other intervals during the repair. This screen will indicate if the inflator was replaced or in some limited cases that the entire airbag assembly was replaced. Click 'next' to proceed to the next step. This information will be used for record keeping by TMS.**

- **If this screen indicates that the campaign has already been completed on this VIN, there is no need to perform campaign again.**

4. CONNECT THE BARCODE SCANNER

a) Connect the barcode scanner to the USB port on the Techstream.

b) The scanner will automatically connect and a beep will be heard when the scanner is ready.

NOTE:

- **The scanner was provided for SSC D0F.**
- **The barcode scanner works best in low light conditions.**
- **Always hold the scanner directly in front of and parallel to the barcode label.**

5. SCAN THE AIRBAG SERIAL NUMBER

a) Scan the ***AIRBAG ASSEMBLY*** serial number 2 times.
   1) Confirm the cursor is in the first serial number box then scan the serial.
   2) Position the cursor in the second serial number box then scan the serial.

b) Click next.

NOTE:

- **If both serial numbers that are entered do not match, confirm and reenter.**
- **If the serial number barcode will not scan, it can be entered manually.**

AIRBAG SERIAL NUMBER IDENTIFICATION

- **The airbag serial number is *ALWAYS* the 12 *DIGITS* located between the asterisks.**
- **The 3 digits before the asterisk *ARE NOT* part of the serial number, and *SHOULD NOT* be entered or an inaccurate response may be returned.**

Airbag Serial Number Label Example

STOP **The *AIRBAG ASSEMBLY* serial number and the *INFLATOR* serial number are *DIFFERENT*. The *AIRBAG ASSEMBLY* serial number *MUST* be recorded prior to replacement.**

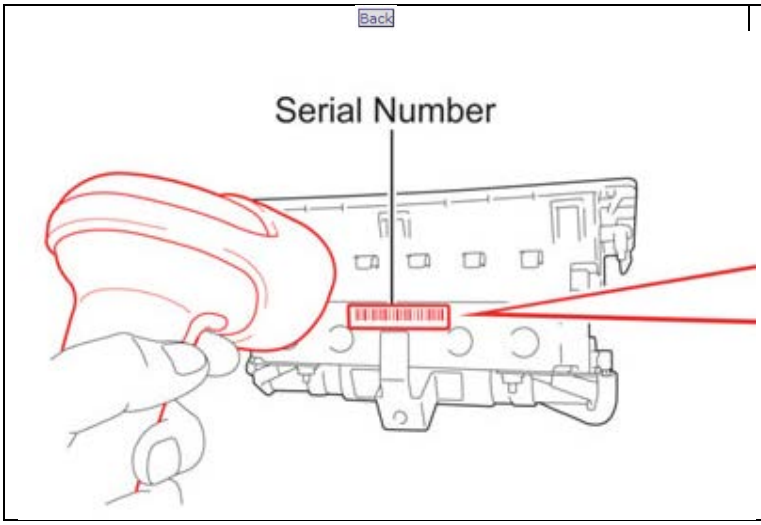

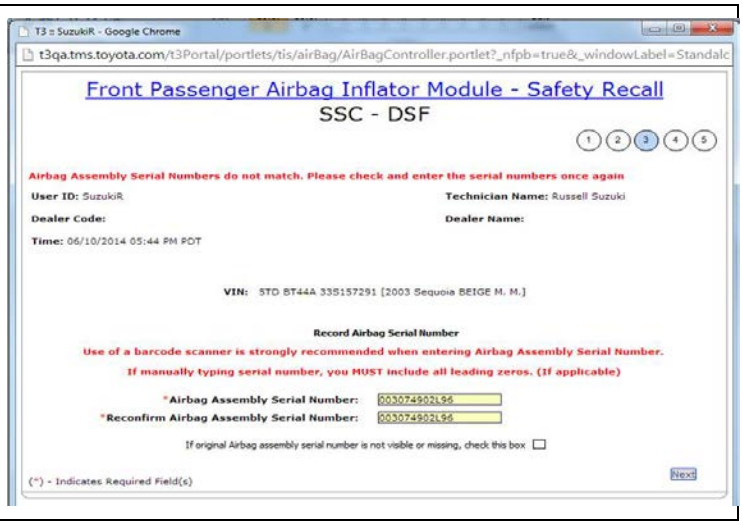

AIRBAG SERIAL NUMBER IS MISSING OR IS UNREADABLE

STOP **If the airbag serial number and barcode are not legible or are not present, check the box in the application indicating the serial number is not legible and contact your regional representative.**

a) If the airbag serial number is unreadable or not present check the box as shown below.

.

b) After the Region approves the Airbag Assembly replacement and the new part is received, record the NEW airbag serial number in the Serial Number Recording Application.

STOP **The new *AIRBAG ASSEMBLY* serial number *MUST* be recorded prior to reinstallation to track the airbag assembly to the vehicle.**

X. INFLATOR REPLACEMENT

Video Supplement: Inflator Replacement

Note: The videos are the same videos as DSF and are intended to supplement the E04 TI.

CRITICAL INFORMATION – READ THOROUGHLY

The connector of the inflator module contains a short circuiting mechanism to eliminate voltage variances when the connector(1) is disconnected. To allow for the replacement of the inflator module, a new short circuit(2) *MUST* be created before cutting the wires(3) and removing the inflator. The following steps *MUST* be followed exactly as described to ensure the work is completed correctly and safely.

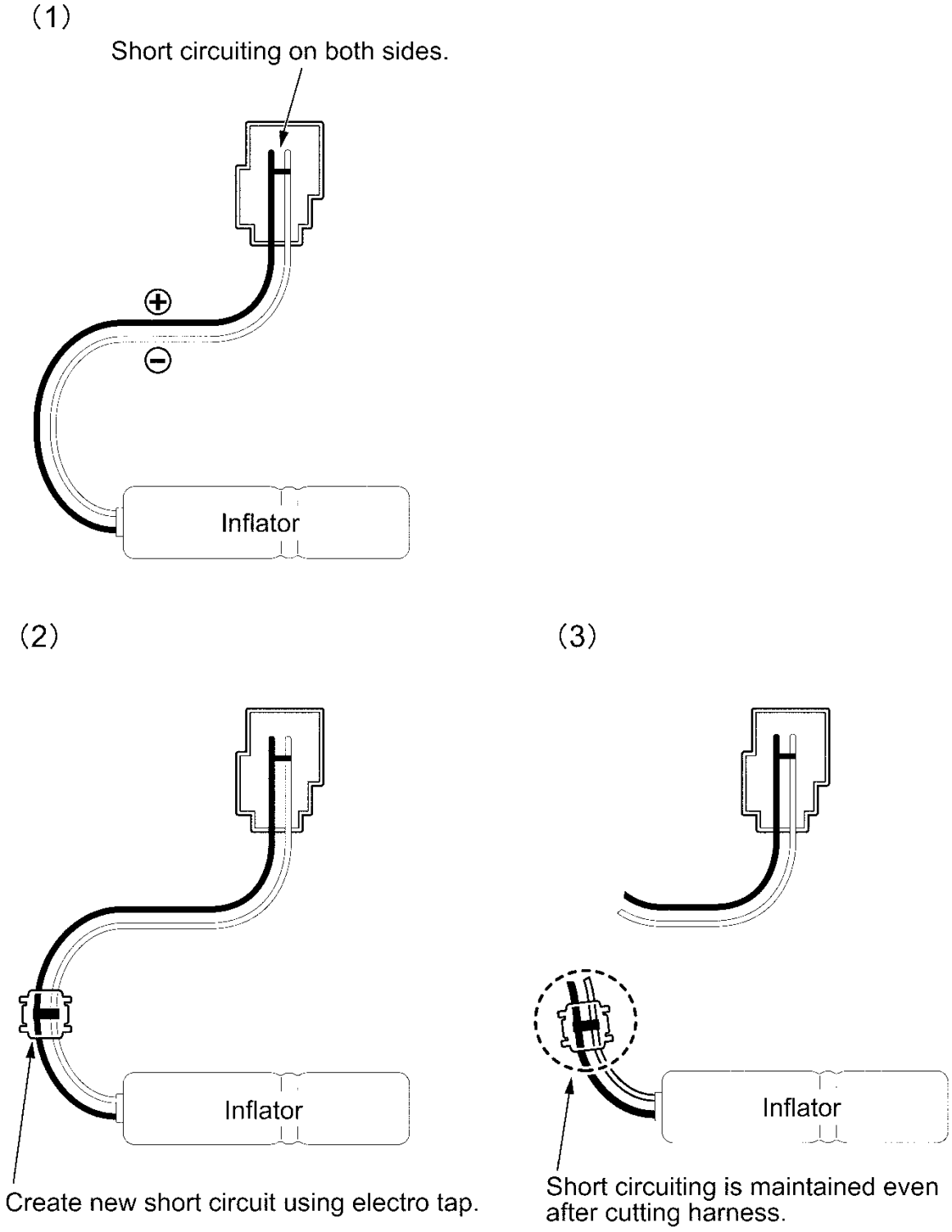

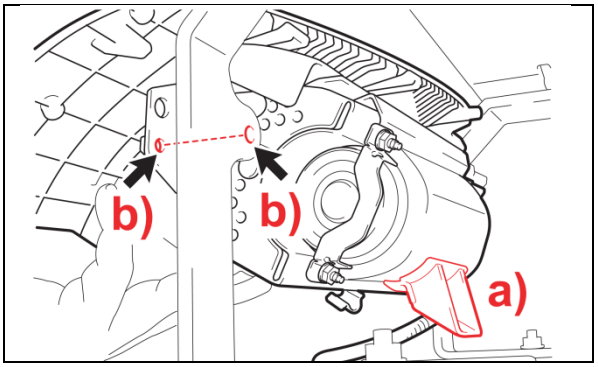

1. MOUNT THE AIRBAG IN THE MOUNTING BRACKET

a) Position the airbag assembly so that the center mounting bracket is facing towards the ground.

b) Install the airbag to the support bars with the bolts supplied in the bracket kit.

NOTE: The airbag assembly will only fit on the support brackets one way.

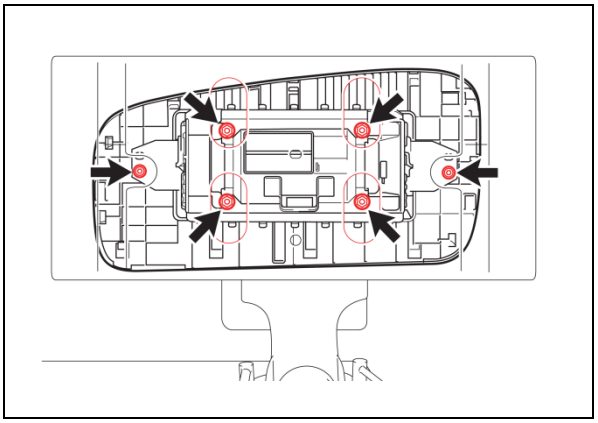

c) Position the airbag so that all four stopper plate nuts can be removed through the access holes.

d) Tighten the bolts holding the support bars to the mounting bracket.

e) Confirm the following:
- Mounting bracket is secure in the vise.
- Airbag is secure in the support bars.
- The center mounting bracket on the airbag assembly is facing downward.
- Support bars are secure on the mounting bracket using 1 bolt/nut at the top of each support bar and 2 nuts/bolts at the bottom of each support bar.

CRITICAL INFORMATION – READ THOROUGHLY

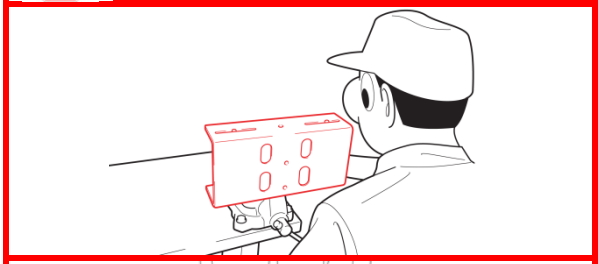

***ALWAYS* keep as much of your body as possible in front of the bracket when working on the airbag assembly.**

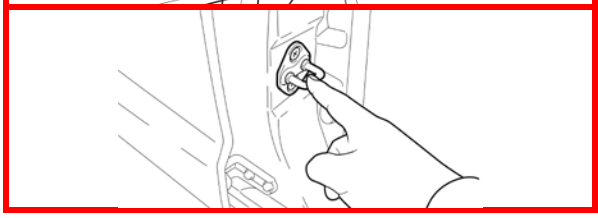

Remember to periodically touch a metallic part of the vehicle to discharge static electricity in the body if the anti-static kit is not being used.

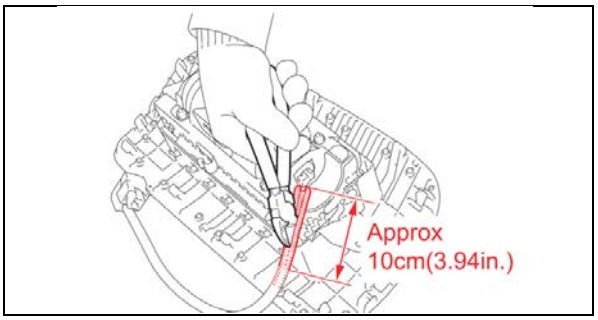

2. PREPARE TO INSTALL THE SHORT CIRCUIT

a) Cut the yellow corrugated tube on the harness approximately 4 inches (10 cm) using nippers.

- ***DO NOT* damage the wires in the tube.**
- ***DO NOT* use a knife or razor blade to cut the tube to avoid damaging the wires.**
- **This may be performed on either end of the inflator.**

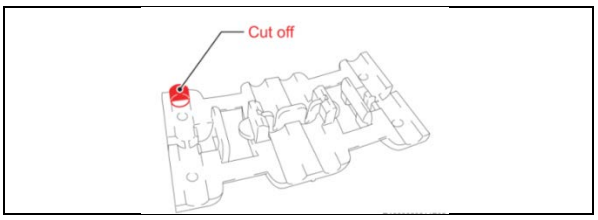

b) Cut off the tab of the electro tap shown in the illustration.

NOTE: The electro tap is included in the inflator parts kit.

This tab *MUST* be removed to ensure a good short.

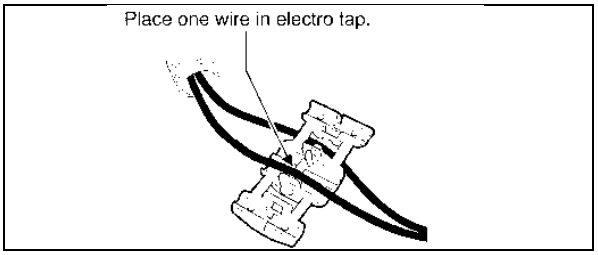

3. CREATE A NEW SHORT CIRCUIT IN THE INFLATOR HARNESS

a) Place one wire in the electro tap as shown in the illustration.

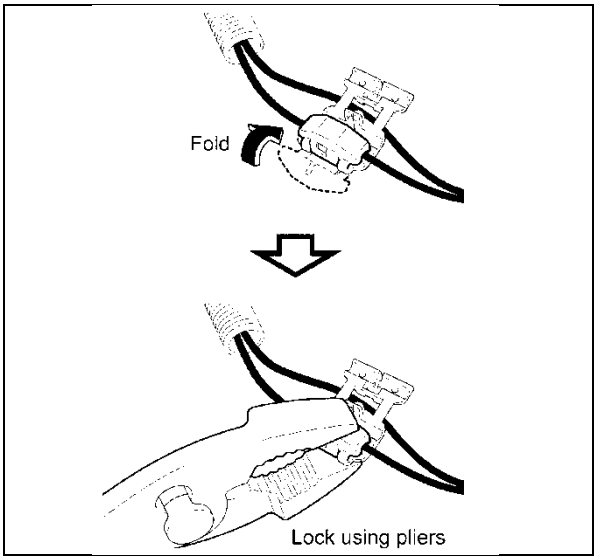

b) Fold and pinch the half of the electro tap with the wire and use pliers to lock the electro tap.

NOTE:

- ***DO NOT* work on both wires at the same time to avoid errors.**
- **Pliers *MUST* be used to confirm the electro tap is firmly locked in place.**

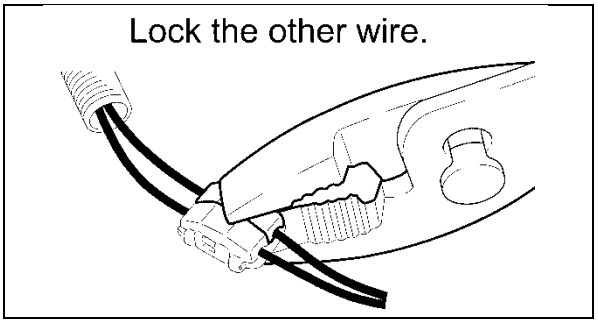

c) Set the other wire in the electro tap and lock it in place using pliers.

STOP ***DO NOT* measure resistance of the inflator wires, this may cause accidental activation.**

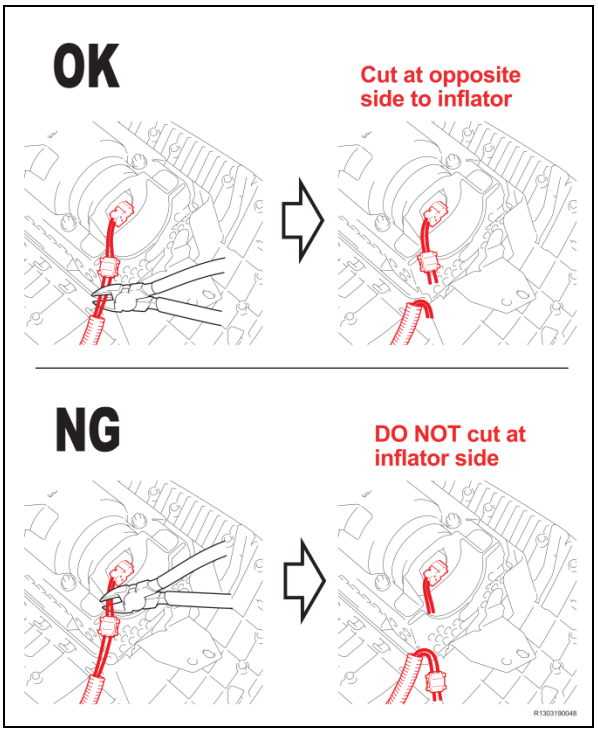

4. CUT THE INFLATOR WIRES

a) Cut the 2 wires at the side of the electro tap that is farthest away from the inflator.

Cut the wires opposite the inflator

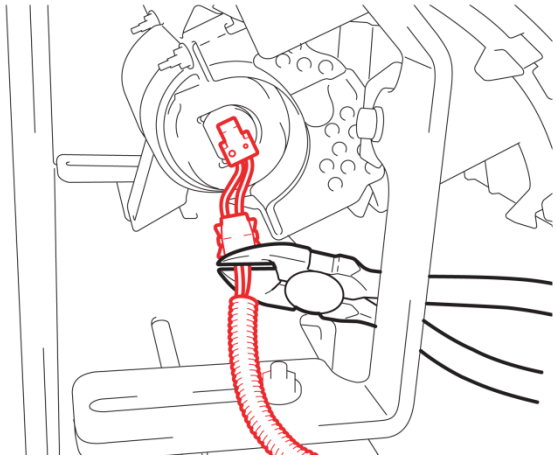

STOP ***DO NOT* measure resistance of the inflator wires, this may cause accidental activation.**

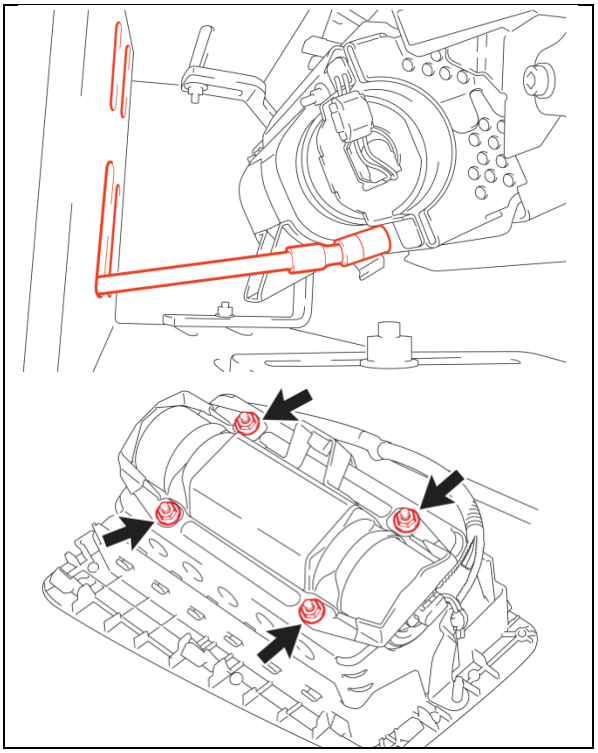

5. REMOVE THE SELF LOCKING NUTS

a) Use the access holes in the bracket to remove the 4 nuts.

NOTE:

- ***DO NOT* use power tools.**
- **The bracket support bars may need to be repositioned to remove the nuts through the access holes.**

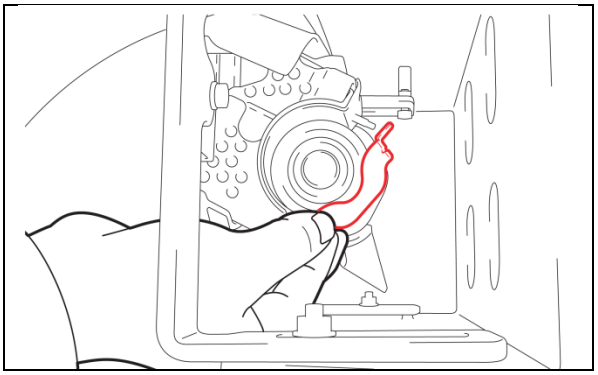

b) Remove the stopper plate and place in a secure location because it will be reused.

STOP ***DO NOT* discard the Stopper Plate, it will be reused.**

c) Discard the 4 nuts as they are not to be reused.

NOTE: *DO NOT* reuse the old nuts, new nuts *MUST* be used.

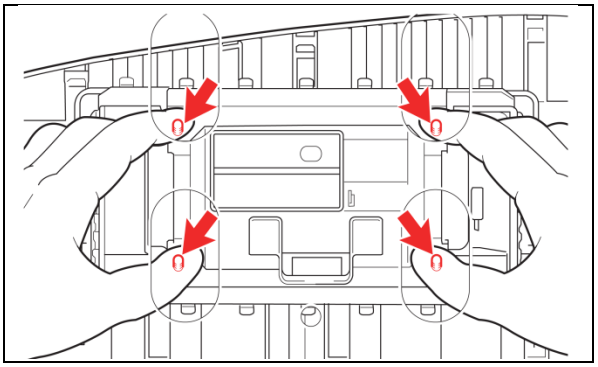

6. REMOVE THE INFLATOR

a) Gently push in the 4 studs to loosen the inflator for removal.

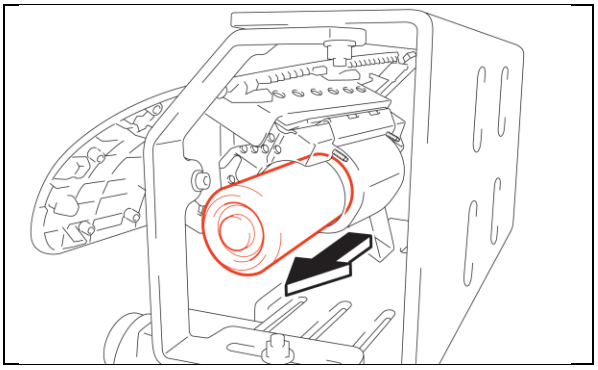

b) Remove the inflator from the airbag assembly and place it on a safe work surface.

7. SCAN THE OLD AND NEW INFLATOR SERIAL NUMBER

a) Scan the ***OLD*** inflator serial number and mark the old inflator so that it will not be reused.

b) Scan the ***NEW*** inflator serial number.

NOTE: This information is *CRITICAL*

- **It is used to confirm the correct inflator is removed from the vehicle.**
- **It is recorded by TMS to trace the return parts shipment.**
- **It is used to track the new inflator that is being installed on the vehicle.**

Step a) Old Inflator

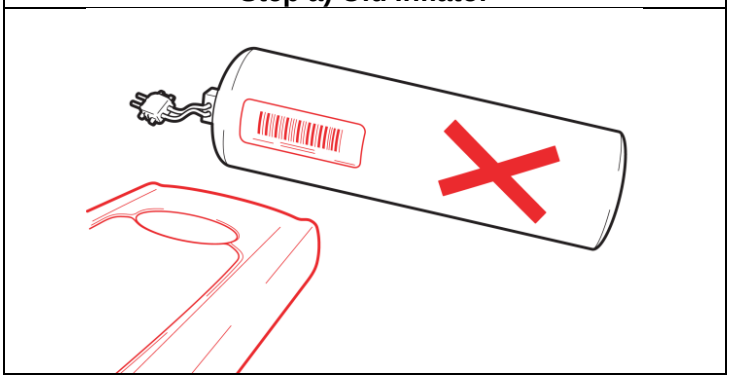

Step b) New Inflator

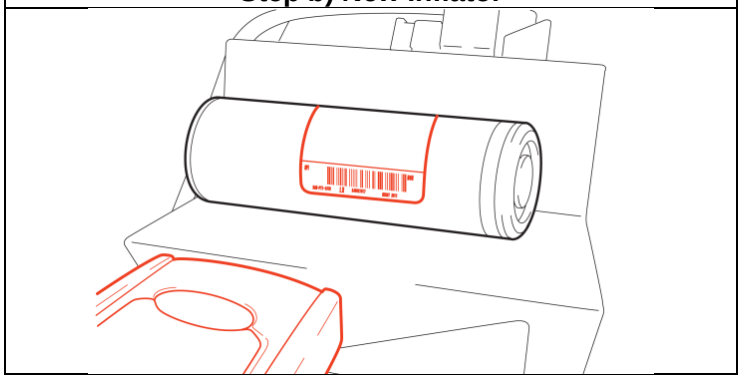

c) Confirm agreement by checking the two boxes.

d) Record the Warranty Authorization # to be included in the warranty claim.

e) Place the old inflator in the parts box and take it immediately to the parts department.

NOTE:

- **Confirm the cursor is in the correct serial number input box before scanning.**
- **If the serial number barcode will not scan, it can be entered manually.**
- **If there are any difficulties or concerns with this process, email quality_compliance@toyota.com with details.**

Step c)

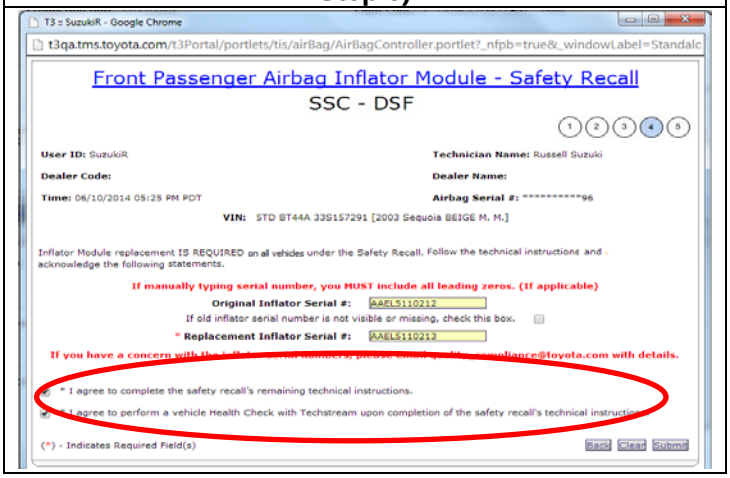

Step d)

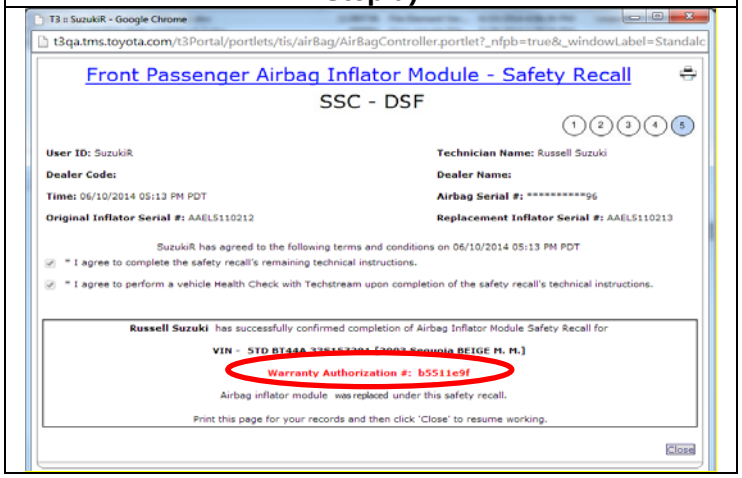

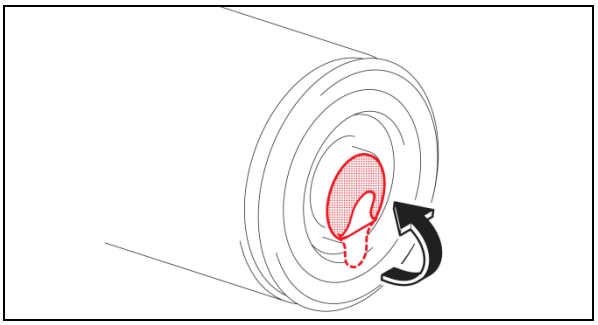

8. FOLD THE CONNECTOR SEAL

a) Fold the seal in order to prevent it from being caught under the airbag assembly bracket in the next step.

NOTE: *DO NOT* fully remove the seal until just before connecting the harness.

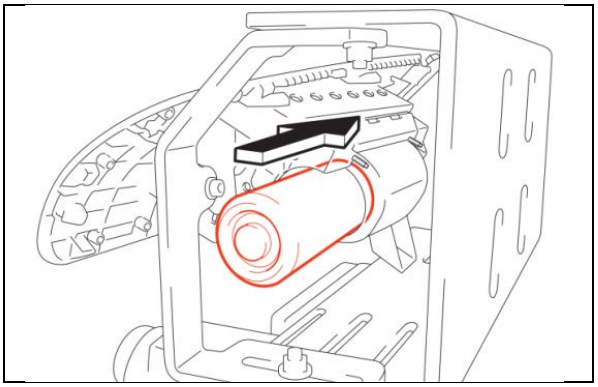

9. INSTALL THE *NEW* INFLATOR

a) Carefully slide the new inflator into the airbag assembly.

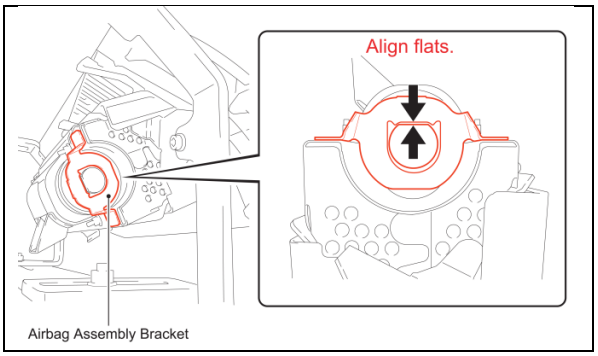

10. CONFIRM THE INFLATOR ALIGNMENT

a) Align the flat on the inflator with the flat on the airbag assembly bracket.

STOP **Confirm the flats on the airbag assembly and inflator are aligned.**

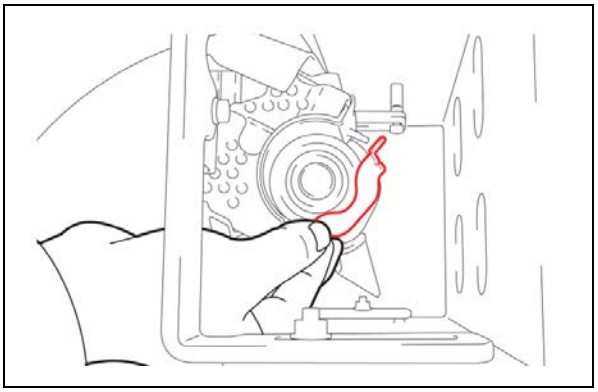

11. REINSTALL THE STOPPER PLATE.

a) Place the stopper plate on the airbag assembly.

STOP ***The inflator stopper plate is reused at this step; a new one is <u>not included</u> in the inflator kit.***

b) Install stopper plate nuts (***NEW)*** by hand. They will be torqued on a later step.

c) Install the ***NEW*** nuts on the airbag assembly bracket by hand. They will be torqued on a later step.

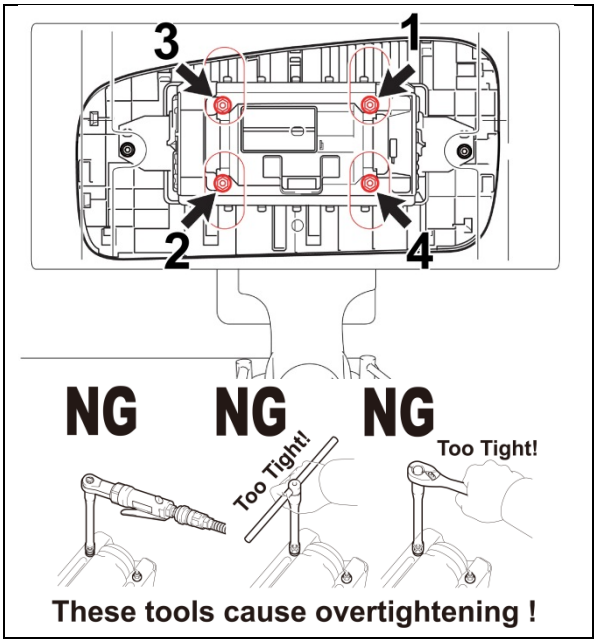

12. TORQUE THE PLATE NUTS

a) Tighten the nuts evenly in two increments following the sequence shown in the illustration. Use a socket driver or torque wrench to tighten the nuts.

Torque: 35in. lbf (3.9N·m)

STOP
- **There will be some resistance when tightening the nuts because they are self-locking, confirm the nuts are tightened correctly.**
- ***DO NOT* use a power tool, T-handle, or ratchet when tightening the nuts to avoid over torqueing.**

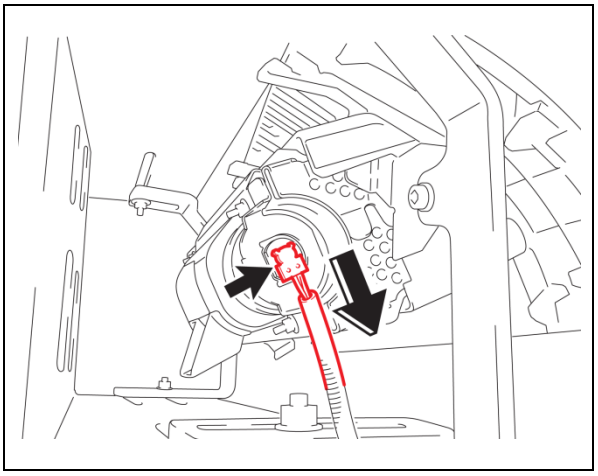

13. CONNECT THE INFLATOR CONNECTOR

a) Remove the connector seal from the inflator.

b) Confirm the alignment of the harness connector as shown in the illustration, then connect the harness. The connector wires should lead downward toward the center airbag mounting bracket.

STOP

- **The connector should be connected *IMMEDIATELY* after removing the seal.**
- **The connector is one-way, once it is installed it *CANNOT* be removed.**
- **If the connector is installed in the incorrect orientation the terminals may be bent or the connector may not fully engage.**

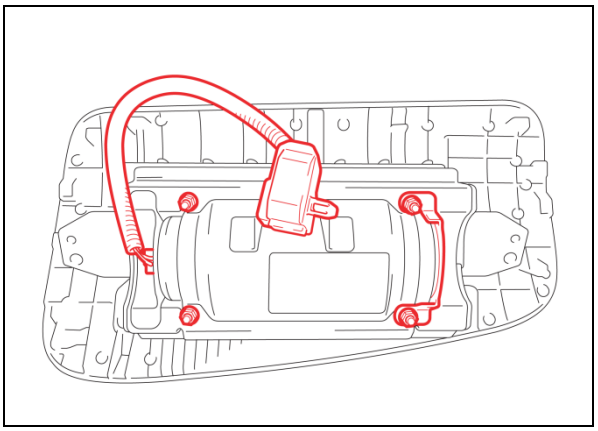

14. REMOVE THE AIRBAG ASSEMBLY FROM THE BRACKET

a) Remove the two bolts and the airbag assembly, then place the assembly on a cloth or the anti-static mat if it being used.

15. INSPECT THE AIRBAG BEFORE INSTALLATION

a) Confirm that the 4 ***NEW*** nuts are installed and tight.

b) Confirm the stopper plate is reinstalled.

c) Confirm the flats on the airbag assembly bracket and inflator are aligned.

d) Confirm the inflator harness connector is secure and installed in the correct direction.

e) Confirm that the harness is engaged in the clamp.

XI. FRONT PASSENGER AIRBAG ASSEMBLY INSTALLATION

1. REINSTALL THE AIRBAG ASSEMBLY

Note: During reinstallation of the airbag assembly, ensure the 12mm bolt and two 10mm nuts securing the airbag assembly to the instrument panel are installed and torqued to the required specification identified on TIS.

b) Refer to TIS for instructions on airbag installation: **Tundra**

2. RECONNECT THE NEGATIVE BATTERY CABLE

3. PERFORM A HEALTH CHECK AND DIAGNOSTIC REPORT

NOTE: Enter the VIN when performing the health check in order for the data to be recorded by TMS.

XII. DISABLE FRONT PASSENGER AIRBAG ASSEMBLY

- **This process is only to be performed in the case where parts are not available.**
- **This process can only be performed on vehicle that are identified as E04 eligible on TIS, this process *CANNOT* be performed on any other vehicles.**

1. DISCONNECT THE NEGATIVE BATTERY CABLE

- **Wait at least 90 seconds after disconnecting the cable from the negative battery terminal to prevent airbag and seat belt pre-tensioner deployment.**
- **Follow all precautions as outlined on TIS before servicing the SRS system.**

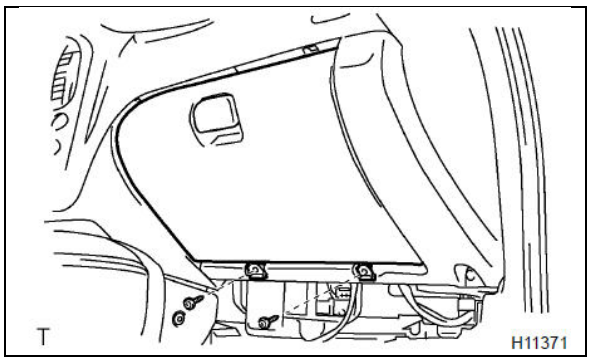

2. REMOVE GLOVE COMPARTMENT DOOR

a) Remove the 2 screws and glove compartment door.
b) Remove the 3 screws and the Lower No. 2 Finish Panel
c) Disconnect the glove box light connector.

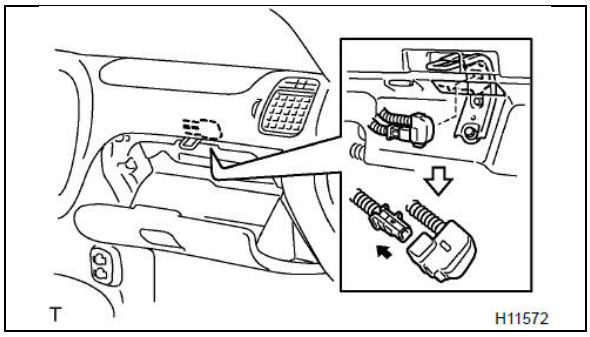

3. DISCONNECT AIRBAG CONNECTOR

NOTE:
When handling the airbag connector, take care not to damage the airbag wire harness.

a) Using a clip remover, disengage the connector clamp.

b) Disconnect the connector.

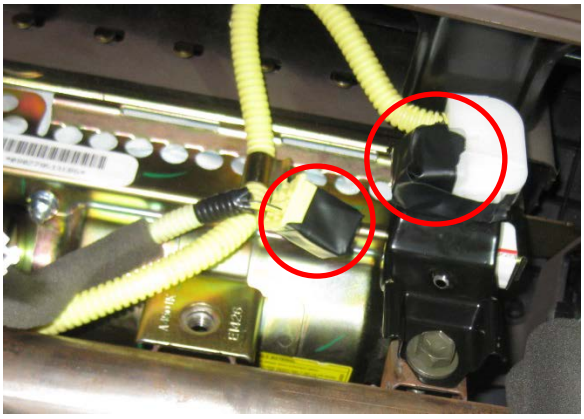

c) Wrap SRS connectors in tape to protect them.

d) Tie-wrap the SRS connector to the upper portion of the glove box latch bracket as shown to prevent the wire harness from creating a rattle.

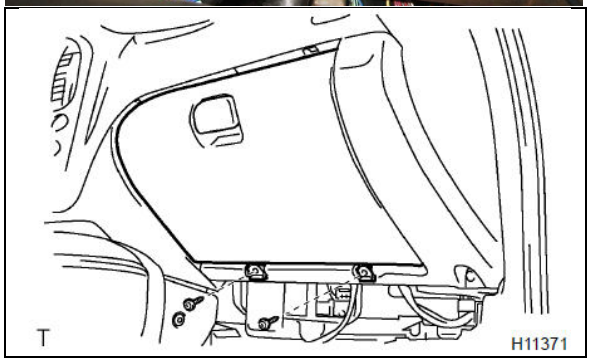

4. REINSTALL THE GLOVE BOX DOOR

a) Connect the glove box light connector.
b) Reinstall the Lower No. 2 Finish Panel with the 3 screws.
c) Reinstall the glove box door and the 2 screws.

5. INSTALL THE AIRBAG DISABLED LABEL

Note: The warning label is available in English and/or Spanish, please work with the ASM to determine the customer preference.

Spanish warning labels will be available shortly, if the customer prefers a Spanish label, please install the English version and print the sample Spanish warning label in the appendix and attach it to the customer copy of the R.O. until the Spanish version becomes available.

6. RECONNECT THE NEGATIVE BATTERY TERMINAL

After disabling the Front Passenger Airbag review the following with the customer:

- **After the dealer has disabled the front passenger air bag assembly, the SRS warning lamp will remain illuminated at all times until the recall campaign is completed.**
- **All other Supplemental Restraint Systems will remain fully functional if the vehicle does not have any concerns with Supplemental Restraint Systems at the time of front passenger Air Bag disablement.**

◄ VERIFY REPAIR QUALITY ►

- **Confirm all precautions are follow to ensure safety during the repair**
- **Confirm the entire serial number checker application is completed and the warranty authorization # is recorded on *EVERY* vehicle**
- **Confirm the old inflator is handled safely and given to the appropriate parts professional for shipment**
- **Confirm the inflator harness connector is fully engaged and that the stopper plate is installed correctly**

If you have any questions regarding this update, please contact your area representative.

XIII. APPENDIX

A. CAMPAIGN DESIGNATION DECODER

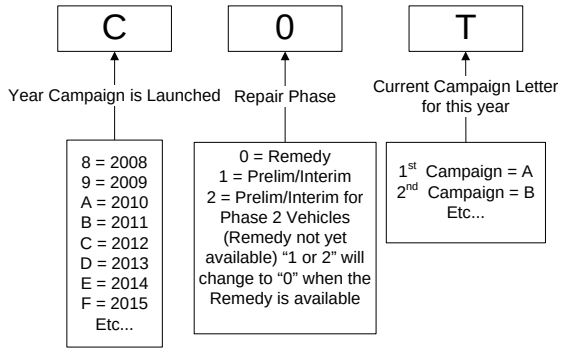

B. CAMPAIGN PARTS DISPOSAL

Video Supplement: Parts Handling

ALL inflators that are removed from vehicles under this campaign ***MUST*** be packaged and shipped back to the inflator manufacturer following the manufacturer's instructions. The instructions can be found in the following locations:

- Attached to the dealer letter
- Included in the parts box
- The laminated aid that was provided at the launch of the campaign

C. SAMPLE WARNING LABEL HANG TAGS (see following pages)

English Version

WARNING

The Passenger Air Bag Has Been Disabled in This Vehicle.

Occupants should NOT sit in the front passenger seat of this vehicle until the Inflator Assembly has been replaced and the Passenger Air Bag is confirmed to be operational by an authorized Toyota dealer.
This is an interim action for Toyota Safety Recall E04.

DO NOT REMOVE

Spanish Version

ADVERTENCIA

La Bolsa de aire del pasajero se ha desactivado en este vehículo.

Ocupantes NO deben sentarse en el asiento del pasajero delantero de este vehículo hasta que el ensamble del inflador se haya reemplazado y la Bolsa de aire del pasajero se confirma para ser operacional por un concesionario autorizado de Toyota.
Este es un recurso provisional de la Reparacíon Preventiva de Seguridad E04 de Toyota.

NO REMOVER