Bulletin No.: 14117C
Date: October 2014

Recall Bulletin

PRODUCT SAFETY RECALL

SUBJECT: **Electric Power Steering Assist**

MODELS: **2008 Chevrolet Malibu**
2008 Pontiac G6
2008 Saturn Aura

The labor time has been revised for the torque sensor replacement. Please discard all copies of bulletin 14117B.

CONDITION

General Motors has decided that a defect, which relates to motor vehicle safety, exists in some 2008 model year Chevrolet Malibu, Pontiac G6, and Saturn Aura vehicles equipped with electric power steering (EPS). The subject vehicles equipped with EPS may experience a sudden loss of power steering assist that could occur at any time while driving. If the power steering assist is lost, a message is displayed on the Driver Information Center and a chime to inform the driver. Steering control can be maintained, as the vehicle will revert to a manual steering mode, but would require greater driver effort at low vehicle speeds, which could result in an increased risk of a crash.

CORRECTION

Dealers are to replace the torque sensor assembly and/or the power steering motor controller unit.

VEHICLES INVOLVED

All involved vehicles are identified by Vehicle Identification Number on the Investigate Vehicle History screen in GM Global Warranty Management system. Dealership service personnel should always check this site to confirm vehicle involvement prior to beginning any required inspections and/or repairs. It is important to routinely use this tool to verify eligibility because not all similar vehicles may be involved regardless of description or option content.

For dealers with involved vehicles, a listing with involved vehicles containing the complete vehicle identification number, customer name, and address information has been prepared and will be provided to US and Canadian dealers through the GM GlobalConnect Recall Reports, or sent directly to export dealers. Dealers will not have a report available if they have no involved vehicles currently assigned.

Copyright 2014 General Motors. All Rights Reserved.

The listing may contain customer names and addresses obtained from Motor Vehicle Registration Records. The use of such motor vehicle registration data for any purpose other than follow-up necessary to complete this recall is a violation of law in several states/provinces/countries. Accordingly, you are urged to limit the use of this report to the follow-up necessary to complete this recall.

PART INFORMATION

Parts required to complete this recall are to be obtained from General Motors Customer Care and Aftersales (GMCC&A). Please refer to your "involved vehicles listing" before ordering parts. Normal orders should be placed on a DRO = Daily Replenishment Order. In an emergency situation, parts should be ordered on a CSO = Customer Special Order.

Part Number	Description	Quantity/Vehicle
23232310	SENSOR KIT – STRG SHAFT TORQUE	1
22837369	MODULE, ELEK P/S MOT CONT	1

SPECIAL TOOLS

All dealers were shipped a snap ring pliers adapter, GE-45126-5, and snap ring pliers, J-45126, for use in this recall. The shipments should have been received at dealerships no later than July 10, 2014. These tools are being furnished at no charge. Additional tools, if required, may be purchased by calling 1-800-GM-Tools (1-800-468-6657).

SERVICE PROCEDURE

Note: Carefully read and follow the important steering shaft torque sensor replacement tips below:

- Review the steering shaft torque sensor replacement video BEFORE completing the repair.
  - **For U.S.:** A video that demonstrates the steering shaft torque sensor replacement can be viewed at www.centerlearning.com (or use the link on Global Connect). Select "Resources" then "Video On Demand". The VOD portal will open. Select GM STC from the choices on the left. Search for 10214.07D. This will bring up the July 2014 Emerging Issues Seminar. The video is part of this seminar. Click on the thumbnail to launch the video.
  - **For Canada:** A video that demonstrates the steering shaft torque sensor replacement can be viewed on the GM Centre of Learning (LMS) web site which can be accessed via the Single Sign-on process through Global Connect. Click on the "Resources" menu option, and then select "Video on Demand," "GM Pro – Centre of Learning" and "Service Technical." The video will be in the list displayed on the page.
- Refer to *Steering Shaft Torque Sensor Replacement* in SI to review the service procedure. Follow the procedure as written to ensure a successful repair. The service procedure is updated often. To ensure that you are using the most current information, refer to SI BEFORE completing the procedure.
- Before starting the repair procedure, slightly turn the wheel in both directions to remove any load (torque).
- The new sensor should be handled with care while it is being prepared for installation.

- The alignment pin should be centered during all of the installation steps and must not be removed until the new sensor is fully installed and aligned. It is very important to follow the alignment pin removal instructions included in the SI procedure.
- It is critical to use the supplied alignment tool before, during and after the installation of the new sensor.
- Before starting the calibration process, TURN ON the ignition with engine OFF and remove hands or any other objects from steering wheel to avoid any load (torque). Repeat step if needed. Cycle the ignition OFF then turn it ON.

Note: Refer to the investigate vehicle history screen (IVH) to determine if the steering column **or** electric power steering motor controller module has been replaced. Only replace the parts that have NOT been replaced during the August 2008 to present time frame.

- If the steering column was replaced during the August 2008 to present time frame, do NOT replace the steering shaft torque sensor.
- If the power steering motor controller module was replaced during the August 2008 to present time frame, do not replace the power steering motor controller module.
- If both the steering column and the power steering motor controller module were replaced during the August 2008 to present time frame, no further action is required.

1. Remove the steering shaft torque sensor. Refer to *Steering Shaft Torque Sensor Replacement* in SI.
2. Install a new steering shaft torque sensor. Refer to *Steering Shaft Torque Sensor Replacement* in SI.

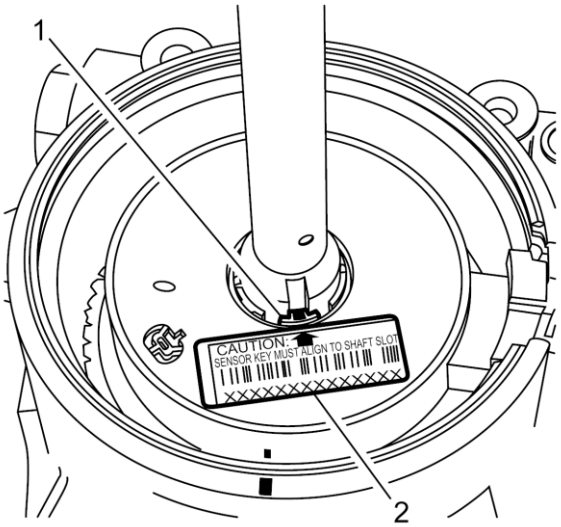

3824308

3. Document the last 9 digits of the NEW steering shaft torque sensor on the vehicle repair order. The serial number is located on the bottom of the caution label (2).
4. Remove the power steering assist motor. Refer to *Power Steering Assist Motor Replacement* in SI.
5. Install a new power steering assist motor. Refer to *Power Steering Assist Motor Replacement* in SI.

CUSTOMER REIMBURSEMENT - For US

Customer requests for reimbursement of previously paid repairs for the recall condition are to be submitted to the dealer by July 31, 2015, unless otherwise specified by state law. If this is not convenient for the customer, they may mail the completed Customer Reimbursement Request Form and all required documents to the GM Customer Assistance Center.

All reasonable and customary costs to correct the condition described in this bulletin should be considered for reimbursement. Any questions or concerns should be reviewed with your GM representative prior to processing the request.

When a customer requests reimbursement, they must provide the following:

- A completed Customer Reimbursement Request Form. This form is mailed to the customer or can be obtained through GM GlobalConnect.
- The name and address of the person who paid for the repair.
- Paid receipt confirming the amount of the repair expense, a description of the repair, and the person or entity performing the repair.

IMPORTANT: GM requires dealers to approve or deny a reimbursement request within 30 days of receipt. If a reimbursement request is approved, the dealer should immediately issue a check to the customer and submit an appropriate warranty transaction for the incurred expense. If a reimbursement request is denied, the dealer MUST provide the customer with a clear and concise explanation, in writing, as to why the request was denied. The bottom portion of the Customer Reimbursement Request Form may be used for this purpose. If the denial was due to missing documents, the customer can resubmit the request when the missing documents are obtained, as long as it is still within the allowed reimbursement period.

Warranty transactions for customer reimbursement of previously paid repairs are to be submitted as required by GM Global Warranty Management. Additional information can also be found in Warranty Administration Bulletin 11-00-89-004.

CUSTOMER REIMBURSEMENT - For Canada and Export

Customer requests for reimbursement of previously paid repairs to correct the condition described in this bulletin are to be submitted to the dealer prior to or by July 15, 2015.

When a customer requests reimbursement, they must provide the following:

- Proof of ownership at time of repair.
- Original paid receipt confirming the amount of unreimbursed repair expense(s) (including Service Contract deductibles), a description of the repair, and the person or entity performing the repair.

All reasonable and customary costs to correct the condition described in this bulletin should be considered for reimbursement. Any questions or concerns should be reviewed with your GM representative prior to processing the request.

COURTESY TRANSPORTATION – For US and Canada

The General Motors Courtesy Transportation program is intended to minimize customer inconvenience when a vehicle requires a repair that is covered by the New Vehicle Limited Warranties. The availability of courtesy transportation to customers whose vehicles are within the warranty coverage period and involved in a product program is very important in maintaining

customer satisfaction. Dealers are to ensure that these customers understand that shuttle service or some other form of courtesy transportation is available and will be provided at no charge. Dealers should refer to the General Motors Service Policies and Procedures Manual for Courtesy Transportation guidelines.

WARRANTY TRANSACTION INFORMATION

Submit a transaction using the table below. All transactions should be submitted as a ZFAT transaction type, unless noted otherwise.

Note: *To avoid having to "H" route the customer reimbursement transaction for approval, it must be submitted prior to the repair transaction.*

Labor Code	Description	Labor Time	Net Item
9100834	Strg Column & P.S. Motor Controller Module Already Replaced – No Further Action Req'd	0.2	N/A
9100548	Steering Shaft Torque Sensor Replacement* Add: Adjustable Foot Pedals	1.5 0.3	N/A
9100549	Power Steering Assist Motor Replacement	0.6	N/A
9100550	Steering Shaft Torque Sensor and Power Steering Assist Motor Replacement* Add: Adjustable Foot Pedals	2.1 0.3	N/A
9100551	Customer Reimbursement Approved**	0.2	***
9100552	Customer Reimbursement Denied - For US dealers only	0.1	N/A

* To prevent a rejection of the warranty transaction, the last 9 digits of the NEW steering shaft torque sensor, which was recorded on the vehicle repair order, MUST be entered when submitting the warranty transaction.

** Customer reimbursement will not close this recall. The service procedure must also be performed on the vehicle. Submit the customer reimbursement warranty transaction prior to submitting the repair transaction. Failure to do so will result in rejection of the repair warranty transaction.

*** The amount identified in “Net Item” should represent the dollar amount reimbursed to the customer.

CUSTOMER NOTIFICATION – For US and Canada

General Motors will notify customers of this recall on their vehicle (see copy of customer letter included with this bulletin).

CUSTOMER NOTIFICATION – For Export

Letters will be sent to known owners of record located within areas covered by the US National Traffic and Motor Vehicle Safety Act. For owners outside these areas, dealers should notify customers using the attached sample letter.

DEALER RECALL RESPONSIBILITY – For US and Export (US States, Territories, and Possessions)

It is a violation of Federal law for a dealer to deliver a new motor vehicle or any new or used item of motor vehicle equipment (including a tire) covered by this notification under a sale or lease until the defect or noncompliance is remedied.

The US National Traffic and Motor Vehicle Safety Act provides that each vehicle that is subject to a recall of this type must be adequately repaired within a reasonable time after the customer has tendered it for repair. A failure to repair within sixty days after tender of a vehicle is prima facie evidence of failure to repair within a reasonable time. If the condition is not adequately repaired within a reasonable time, the customer may be entitled to an identical or reasonably equivalent vehicle at no charge or to a refund of the purchase price less a reasonable allowance for depreciation. To avoid having to provide these burdensome remedies, every effort must be made to promptly schedule an appointment with each customer and to repair their vehicle as soon as possible. In the recall notification letters, customers are told how to contact the US National Highway Traffic Safety Administration if the recall is not completed within a reasonable time.

DEALER RECALL RESPONSIBILITY – All

All unsold new vehicles in dealers' possession and subject to this recall must be held and inspected/repaired per the service procedure of this recall bulletin before customers take possession of these vehicles.

Dealers are to service all vehicles subject to this recall at no charge to customers, regardless of mileage, age of vehicle, or ownership, from this time forward.

Customers who have recently purchased vehicles sold from your vehicle inventory, and for which there is no customer information indicated on the dealer listing, are to be contacted by the dealer. Arrangements are to be made to make the required correction according to the instructions contained in this bulletin. A copy of the customer letter is provided in this bulletin for your use in contacting customers. Recall follow-up cards should not be used for this purpose, since the customer may not as yet have received the notification letter.

In summary, whenever a vehicle subject to this recall enters your vehicle inventory, or is in your dealership for service in the future, you must take the steps necessary to be sure the recall correction has been made before selling or releasing the vehicle.

GM bulletins are intended for use by professional technicians, NOT a "do-it-yourselfer". They are written to inform these technicians of conditions that may occur on some vehicles, or to provide information that could assist in the proper service of a vehicle. Properly trained technicians have the tools, equipment, safety instructions, and know-how to do a job properly and safely. If a condition is described, DO NOT assume that the bulletin applies to your vehicle, or that your vehicle will have that condition. See your dealer for information on whether your vehicle may benefit from the information.

We Support Voluntary Technician Certification

IMPORTANT SAFETY RECALL

July 2014

Dear General Motors Customer:

This notice is sent to you in accordance with the National Traffic and Motor Vehicle Safety Act.

General Motors has decided that a defect, which relates to motor vehicle safety, exists in your 2008 model year Chevrolet Malibu, Pontiac G6, or Saturn Aura vehicles equipped with electric power steering (EPS). As a result, GM is conducting a safety recall. We apologize for this inconvenience. However, we are concerned about your safety and continued satisfaction with our products.

IMPORTANT

- This notice applies to your GM vehicle.
- Your vehicle is involved in GM safety recall 14117.
- Schedule an appointment with your GM dealer.
- This service will be performed for you at **no charge**.
- If the warning message is displayed on the Driver Information Center and a chime sounds, the power steering will be lost and the vehicle will revert to a manual steering mode, which may require greater driver effort at low vehicle speeds. The power steering may return the next time the vehicle is started; however, you will still need to have your vehicle serviced when parts are available.

Why is your vehicle being recalled?

Your vehicle equipped with EPS may experience a sudden loss of power steering assist that could occur at any time while driving. If the power steering assist is lost, a message is displayed on the Driver Information Center and a chime sounds to inform the driver. Steering control can be maintained, as the vehicle will revert to a manual steering mode, but would require greater driver effort at low vehicle speeds, which could result in an increased risk of a crash.

What will we do?

Depending on whether you already had some parts on your steering system replaced, your GM dealer will replace the torque sensor assembly or the power steering motor controller unit, or both. This service will be performed for you at **no charge**. Because of service scheduling requirements, it is likely that your dealer will need your vehicle longer than the actual service correction time of approximately 40 minutes to 1 hour and 45 minutes, depending on the repair required.

What should you do?

You should contact your GM dealer to arrange a service appointment as soon as possible.

Did you already pay for this repair?

Even though you may have already had this condition corrected, you will still need to take your vehicle to your dealer for additional repairs. If you have paid for repairs for the recall condition, please complete the enclosed reimbursement form and present it to your dealer with all required documents. Working with your dealer will expedite your request, however, if this is not convenient, you may mail the completed reimbursement form and all required documents to Reimbursement Department, PO Box 33170, Detroit, MI 48232-5170. The completed form and required documents must be presented to your dealer or received by the Reimbursement Department by July 31, 2015, unless state law specifies a longer reimbursement period.

Do you have questions?

If you have questions or concerns that your dealer is unable to resolve, please contact the appropriate Customer Assistance Center at the number listed below.

Division	Number	Text Telephones (TTY)
Chevrolet	1-800-222-1020	1-800-833-2438
Pontiac	1-800-762-2737	1-800-833-7668
Saturn	1-800-553-6000	1-800-833-6000
Guam	65-6267-1752	
Puerto Rico – English	1-800-496-9992	
Puerto Rico – Español	1-800-496-9993	
Virgin Islands	1-800-496-9994	

If after contacting your dealer and the Customer Assistance Center, you are still not satisfied we have done our best to remedy this condition without charge and within a reasonable time, you may wish to write the Administrator, National Highway Traffic Safety Administration, 1200 New Jersey Avenue, SE, Washington, DC 20590, or call the toll-free Vehicle Safety Hotline at 1.888.327.4236 (TTY 1.800.424.9153), or go to http://www.safercar.gov. The National Highway Traffic Safety Administration Campaign ID Number for this recall is 14V153.

Federal regulation requires that any vehicle lessor receiving this recall notice must forward a copy of this notice to the lessee within ten days.

Jim Moloney
General Director,
Customer and Relationship Services

Enclosure
GM Recall #14117