Bulletin No.: 14491
Date: August 2014

Recall Bulletin

PRODUCT SAFETY RECALL

SUBJECT: **Front Passenger Air Bag Inflator**

MODELS: **2003-2004 Pontiac Vibe**

Vehicles involved in this recall were originally involved in safety recall 13112. Based on new instructions from Toyota, the remedy for this condition is now being updated. GM will now replace the airbag module on all vehicles subject to this recall. Vehicles that had an inspection under safety recall 13112 but did not have the air bag module replaced are included in this recall, along with vehicles that never came in for the repair.

CONDITION

The Pontiac Vibe was manufactured by New United Motor Manufacturing, Inc. (NUMMI), a joint venture between Toyota and GM.

Toyota has decided that a defect, which relates to motor vehicle safety, exists in certain 2003 and 2004 model year Pontiac Vibe vehicles. As a result, GM is conducting a safety recall. Some of these vehicles have a condition in which the front passenger airbag inflator could have been assembled with improperly manufactured propellant. Improperly manufactured propellant could cause the inflator to rupture and the front passenger airbag to deploy abnormally in the event of a crash, increasing the risk of injury to the occupant.

CORRECTION

Dealers are to replace the front passenger air bag inflator.

VEHICLES INVOLVED

All involved vehicles are identified by Vehicle Identification Number on the Investigate Vehicle History screen in GM Global Warranty Management system. Dealership service personnel should always check this site to confirm vehicle involvement prior to beginning any required inspections and/or repairs. It is important to routinely use this tool to verify eligibility because not all similar vehicles may be involved regardless of description or option content.

For dealers with involved vehicles, a listing with involved vehicles containing the complete vehicle identification number, customer name, and address information has been prepared and will be provided to U.S. and Canadian dealers through the GM GlobalConnect Recall Reports. Dealers will not have a report available if they have no involved vehicles currently assigned.

Copyright 2013 General Motors. All Rights Reserved.

The listing may contain customer names and addresses obtained from Motor Vehicle Registration Records. The use of such motor vehicle registration data for any purpose other than follow-up necessary to complete this recall is a violation of law in several states/provinces/countries. Accordingly, you are urged to limit the use of this report to the follow-up necessary to complete this recall.

PART INFORMATION

Parts required to complete this recall are to be obtained from General Motors Customer Care and Aftersales (GMCCA). Please refer to your "involved vehicles listing" before ordering parts. Order parts on a CSO = Customer Special Order only. **All orders will be reviewed prior to being filled.**

Part Number	Description	Quantity/Vehicle
19205568	INFLATOR ASM, I/P MDL AIR BAG *	1 (As Req'd.)

* All Dealers: Do not discard or destroy the box containing the new passenger air bag inflator, it will be needed to return the used inflator. The box contains special instructions for the packaging and shipment of the used inflator. The instructions must be followed without exception. DO NOT DEPLOY ANY INFLATOR.

  U.S. Dealers: Refer to pages 1-2 of the instructions included with the new inflator. The used inflator must be returned within 2 business days of its removal from an involved vehicle. The person packing and shipping the used inflator must have received hazardous material training as per section 1.7.4.1 of the GM Service Policies and Procedures Manual and the training records must be on file at your dealership.

  Canada Dealers: Refer to pages 3-4 of the instructions included with the new inflator. Contact Crane Worldwide to pick up the used inflator within 2 business days of its removal from an involved vehicle.

SPECIAL TOOLS

Note: Effective immediately, the Bar Code Scanner EL51378, which was previously sent to select dealers to inspect the air bag serial number to determine whether they needed to be replaced, is no longer required. All suspect inflators must now be replaced. However, dealers are still required to use air bag mounting bracket, shown below, to perform the front passenger air bag inflator replacement procedure.

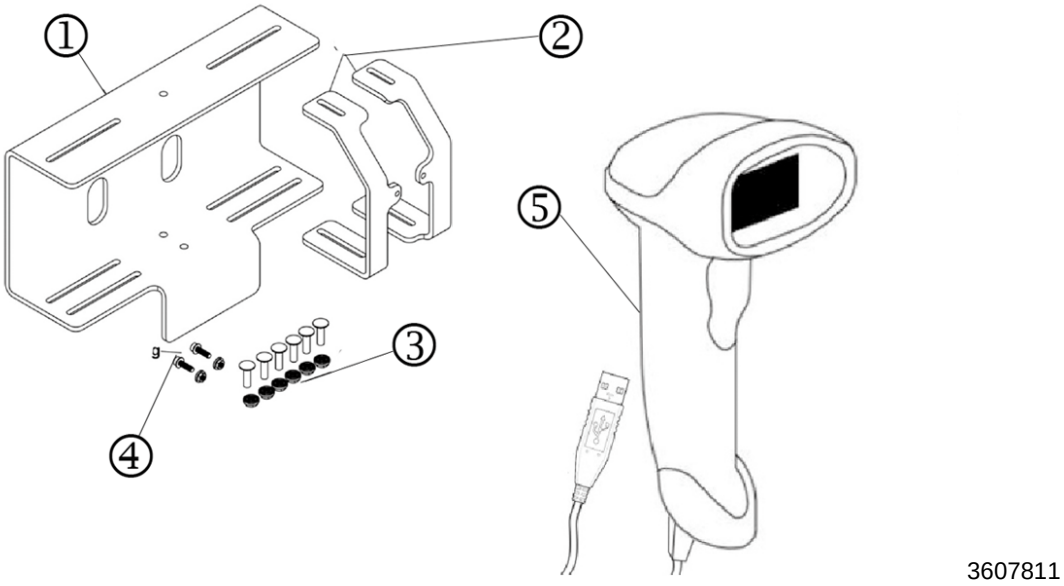

(1) Mounting Bracket (2) Support Bars (3) Support Bar Hardware (4) Air bag Mounting Hardware (5) Bar code Scanner.

SERVICE PROCEDURE

Note: Dealers are required to use the air bag mounting bracket to perform the front passenger air bag inflator replacement procedure. If your dealership does not have the air bag mounting bracket, provide courtesy transportation to the customer until an air bag mounting bracket is obtained and the required repair is completed. A list of the dealers that were shipped the special tools is available in the GM GlobalConnect Library. Check this list to identify a dealer in your area that has the tools and request to borrow the air bag mounting bracket. You're GM District Manager – Aftersales can also assist with obtaining the air bag mounting bracket if the tool is not locally available from another dealer.

Note: All involved vehicles are identified by Vehicle Identification Number on the Investigate Vehicle History screen in the GM Global Warranty Management system. Dealership service personnel should always check this site to confirm vehicle involvement prior to beginning any required inspections and/or repairs. It is important to routinely use this tool to verify eligibility because not all similar vehicles may be involved regardless of description or option content.

Note: This field action bulletin provides service repair and labor time information for replacing the passenger side air bag inflator module. Other repairs, if required, are to be billed under warranty, goodwill assistance or customer pay.

1. Connect the scan tool and determine if any diagnostic trouble codes (DTCs) have been set. Record set DTCs, if present, on the job card.
2. Remove the instrument panel (I/P) compartment. Refer to *Instrument Panel Compartment Replacement* in SI.
3. Disconnect cable from negative battery terminal. Refer to *Battery Negative Cable Disconnection and Connection* in SI.

Danger: Wait at least 90 seconds after disconnecting the cable from the negative battery terminal to prevent air bag and seat belt pretensioner deployment.

Caution: Avoid scratching or damaging the dashboard assembly. Place protective tape on the dashboard if needed.

4. Remove the instrument panel passenger air bag assembly. Refer to *Air bag Instrument Panel Module Replacement* in SI.
5. Place the air bag module on a clean work bench.

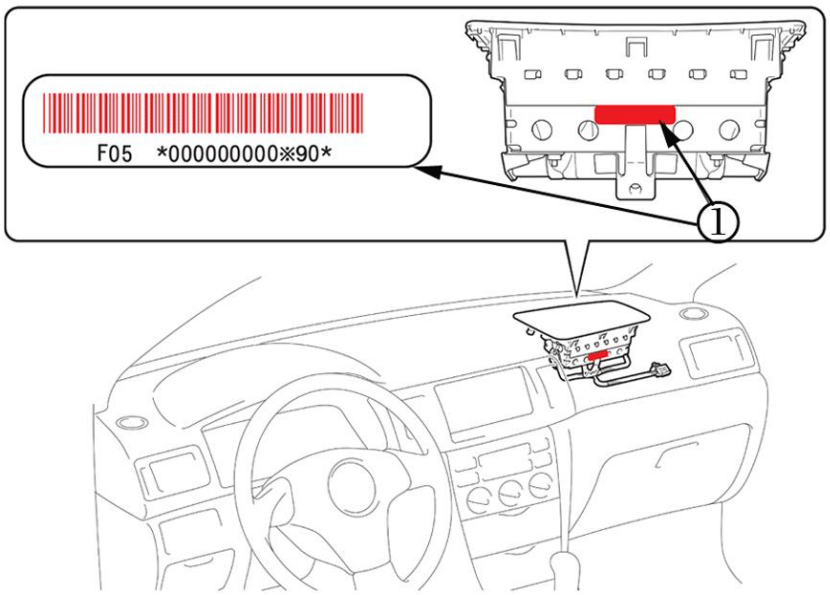

3470289

6. Locate passenger air bag bar code label (1). Refer to illustration.
7. Determine if an ‘X’ is present on the bar code label. The ‘X’, if present, will be located in the lower right-hand corner of the bar code label.
   - If an ‘X’ is NOT present, proceed to *Front Passenger Air bag Inflator Module Replacement* in this bulletin.
   - If an ‘X is present, the air bag module has already been repaired. Re-install the air bag module. Refer to *Air bag Instrument Panel Module Replacement* in SI. Proceed to step 25 in the *Front Passenger Air bag Inflator Module Replacement* section of this bulletin.

Safety Precautions

Warning: If an air bag system is not handled using proper procedures and methods, it may be activated accidentally during work resulting in a life-threatening serious accident. If the service procedure is NOT performed correctly, the system may fail to activate when needed. Be sure to perform the proper work safely and according to the instructions in this service procedure.

1. **Eliminate Static Electricity.** Before start of work, touch a metallic portion of the vehicle with a bare hand to discharge static electricity charged on your body.
2. **DO NOT Measure Resistance**. DO NOT measure resistance of air bag components. Measuring current of a circuit tester may cause accidental activation.
3. **Handle The Air Bag Properly.** If an inflator is dropped, replace it with a **NEW** inflator.
4. **DO NOT Allow Foreign Objects Near Air bag.** Collect and account for all removed nuts/bolts to prevent them from landing in the air bag assembly. Any foreign objects in the air bag assembly may cause damage or injury if the air bag is activated.
5. **Wear Protective Equipment.** Always wear appropriate protective equipment when working on the air bag.

Front Passenger Air bag Inflator Module Replacement

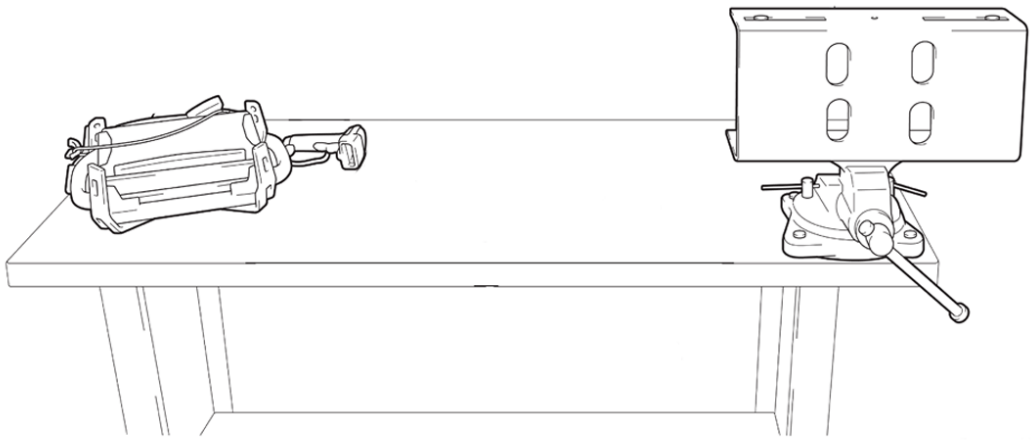

3607819

Danger: To avoid personal injury or death, it is critical to use an air bag module bracket when replacing an inflator module. Carefully read and follow the instructions below:

- Confirm the bracket assembly is installed securely in the vice.
- Confirm there are no loose objects or people exposed to the back side of the bracket for safety in the unlikely event of air bag deployment due to improper work procedures. The air bag is NOT being replaced due to an inadvertent deployment concern.
- Confirm that no objects, tools or people are within 3 feet (1 meter) of the back side of the bracket.
- Confirm that no objects, tools or people are within 2 feet (0.6 meters) of the sides of the bracket.
- BEFORE starting work and periodically while working on the air bag module, touch a metallic part of the work bench to discharge static electricity in the body.

1. Mount the air bag module bracket securely in a vice.

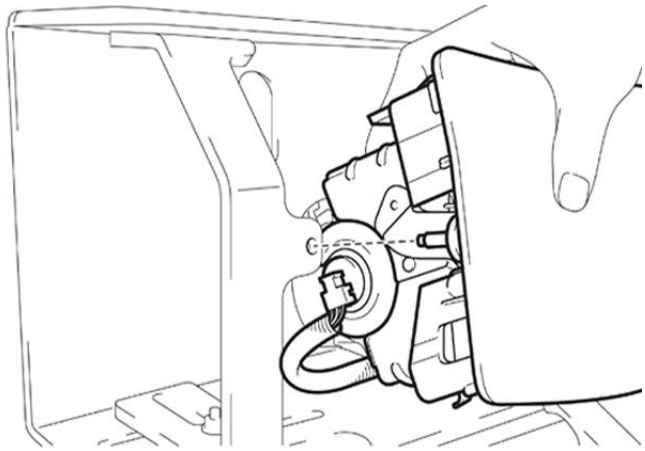

3607829

2. Position the two mounting studs on the air bag assembly into the holes on the bracket support bars.

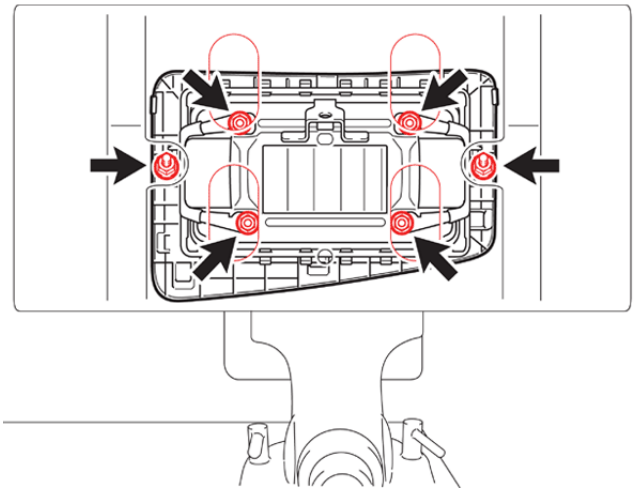

3607904

3. Loosely install the air bag to the support bars with the nuts supplied in the bracket kt.
4. Position the air bag so that all four stopper plate nuts can be removed through the access holes.
5. Tighten the two nuts holding the air bag to the support bars.
6. Confirm the following steps have been completed BEFORE proceeding to the next step:
   - The mounting bracket is secure in the vise.
   - The air bag module is secured to the support bars of the bracket.
   - The support bars are secured on the mounting bracket using one (1) bolt/nut at the top of each support bar and two (2) nuts/bolts at the bottom of each support bar.

3607909

Danger: To avoid personal injury, *ALWAYS* keep as much of your body as possible in front of the bracket when working on the air bag assembly. Remember to periodically touch a metallic part of the vehicle or work bench to discharge static electricity in the body.

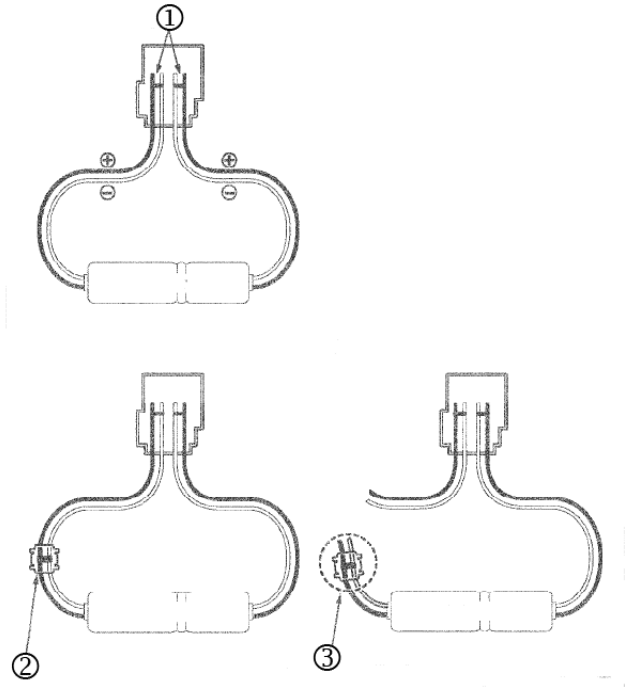

3470510

Note: The connector of an air bag inflator has a short-circuiting mechanism that eliminates voltage difference when disconnected (1). To allow for the replacement of the inflator module, a new short circuit using and electro tap (2) MUST be created BEFORE cutting the wires (3) and removing the inflator.

7. Create a short circuit before disconnecting the inflator wire harness.

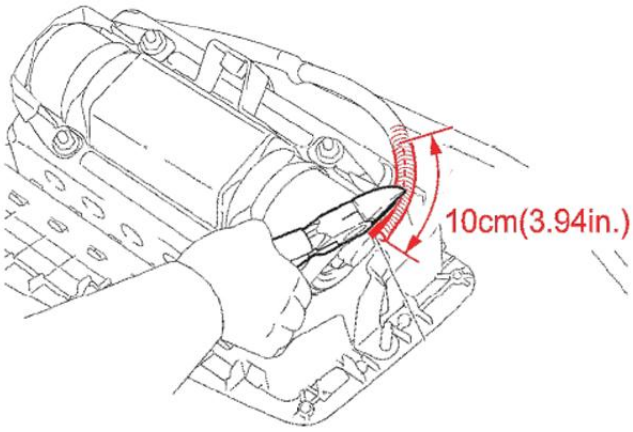

3470432

Caution: DO NOT damage the internal wires when cutting open the corrugate tube. DO NOT use a knife or razor blade to cut the tube to avoid damaging the wires. This step may be performed on either end if the inflator.

7.1 Cut open the corrugated tube on the yellow harness approximately 10 cm (4 in) using snipers.

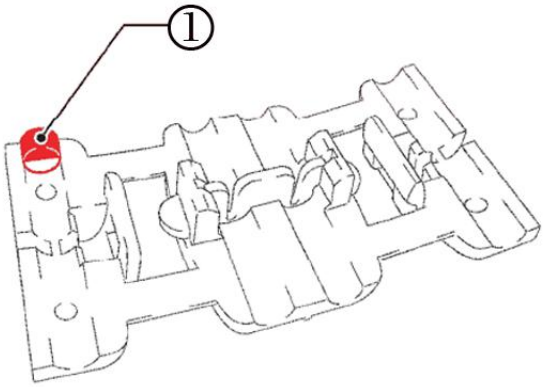

3470344

Danger: The tab on the electro tap must be removed to ensure a good short.

7.2 Cut off the tab of the electro tap (1) (included in the kit) shown in the illustration.

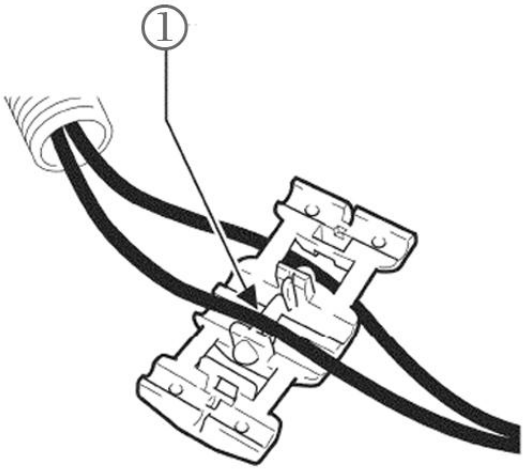

3470361

7.3 Short-circuit the two wires using the electro tap. Place one wire (1) in the electro tap as shown in the illustration.

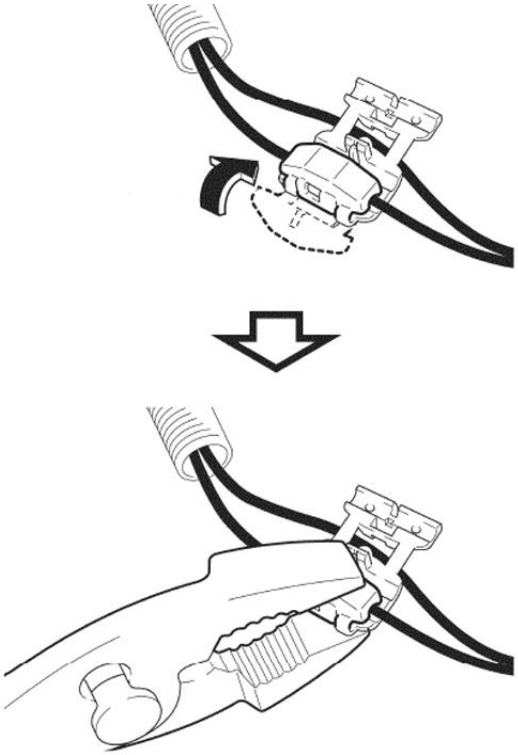

3470357

Note: Simultaneously working on the two wires tends to cause a mistake. Be sure to set the wire in the electro tap one wire at a time. Lock the electro tap firmly using pliers. If locked by hand, the electro tap may unfasten.

7.4 Fold and pinch the half of the electro tap where the first wire was just placed using pliers to lock firmly.

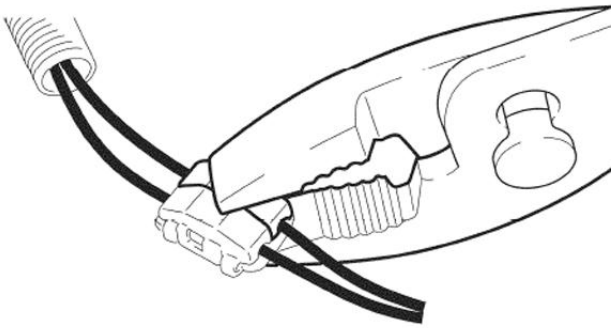

3470369

7.5 Set the other wire in the electro tap and lock in a similar way with pliers.

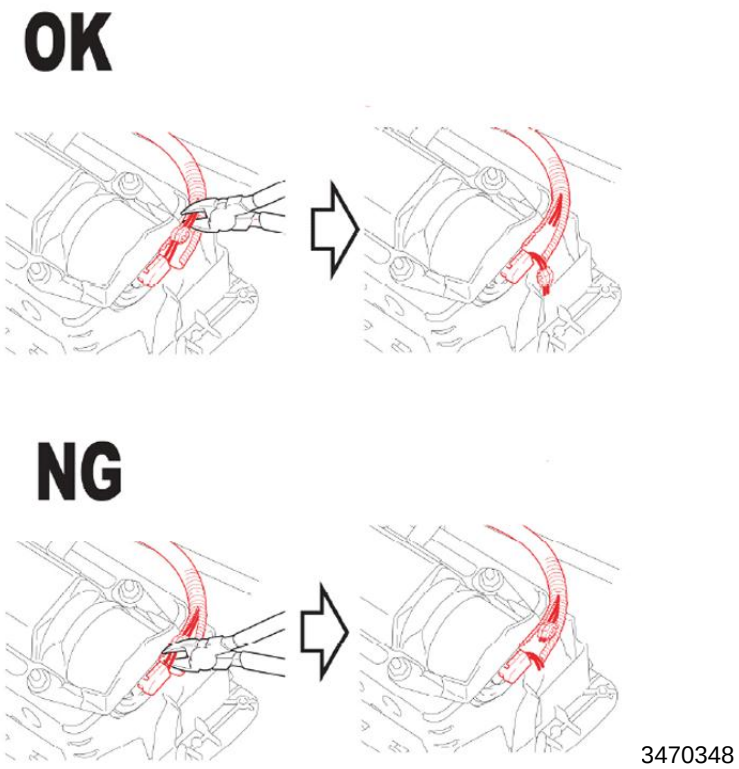

3470348

OK: Cut wires at opposite side to inflator. NG: Do NOT cut at inflator side.

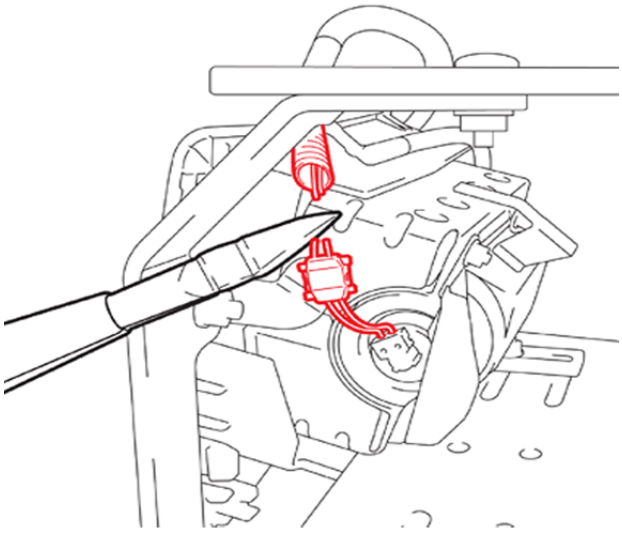

3607837

Danger: Do NOT measure resistance of the inflator wires. This may cause accidental activation of the inflator.

Caution: Ensure to cut the two wires at the correct location. Refer to the illustration.

8. Cut the two wires at the side of the electro tap opposite to the inflator (the side of the electro tap that is farthest away from the inflator).

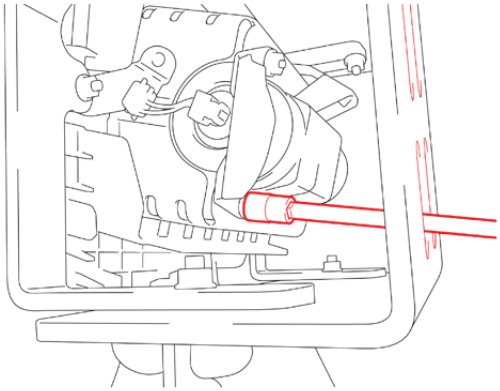

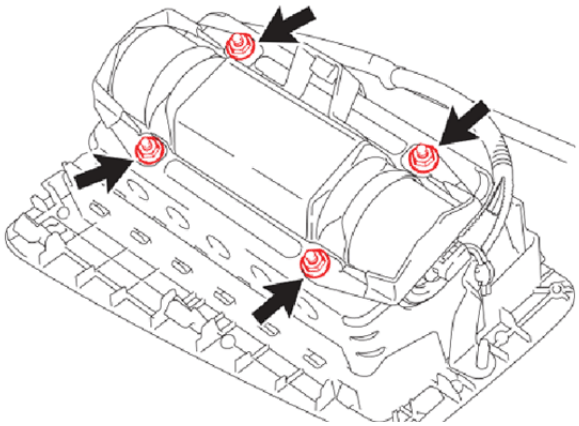

3607844

Caution: DO NOT use power tools. The bracket support bars may need to be repositioned to remove the nuts through the access holes.

9. Use the access holes in the bracket to loosen and remove the four self-locking nuts.

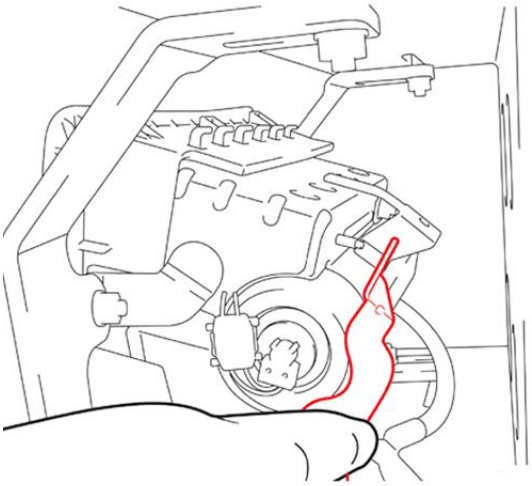

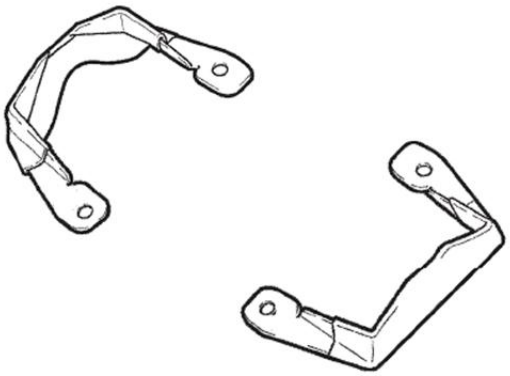

3607850

10. Remove the stopper plates.
11. Discard the 4 nuts and 2 stopper plates as they are not to be reused.
12. Remove the inflator.

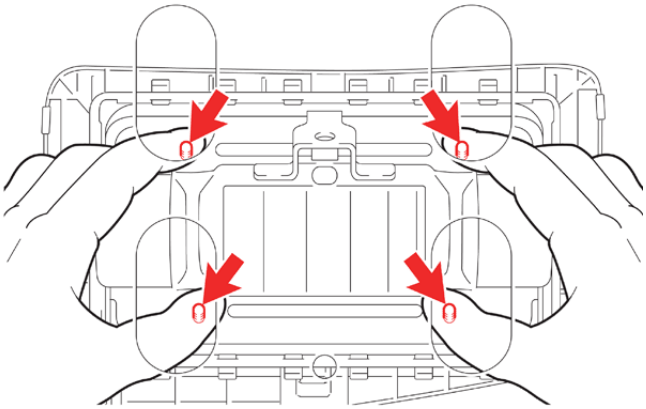

3607857

12.1 Gently push in the 4 studs to loosen the inflator for removal.

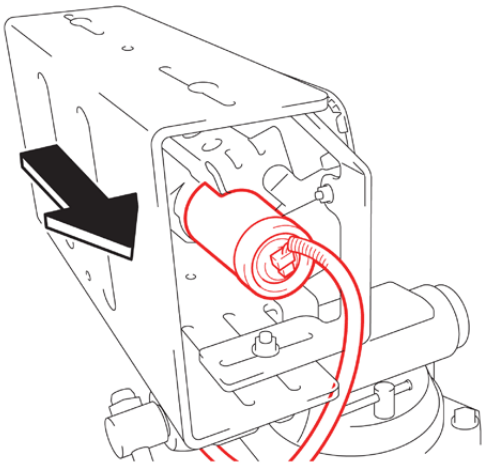

3607866

12.2 Remove the inflator from the air bag assembly and place it on a safe work surface.

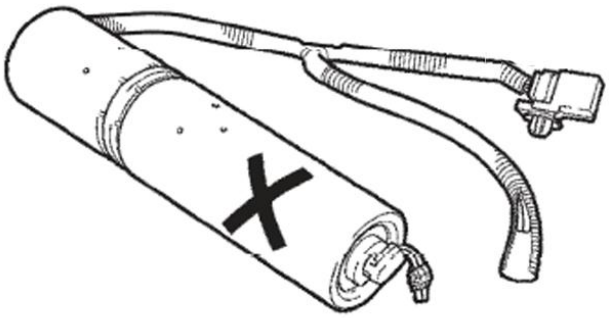

3470416

12.3 Put a mark on the removed inflator and store it in the provided replacement part box. Refer to the packaging instructions that were included with the new inflator module kit.

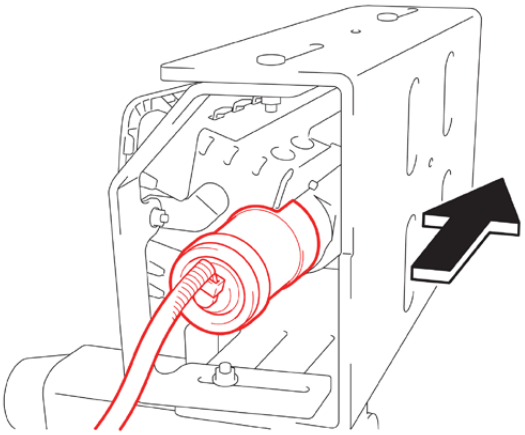

3607873

13. Carefully slide the new inflator into the air bag assembly.

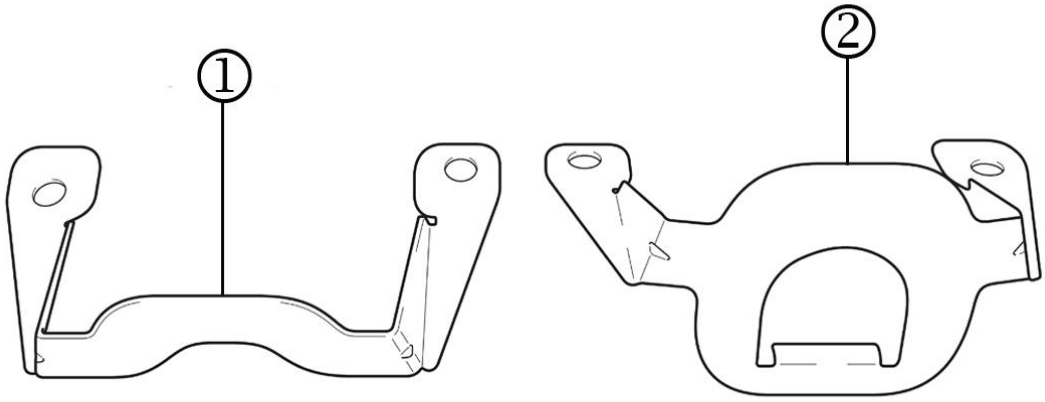

3607880

14. Confirm the identification of the stopper and the position determining plate. ***THEY ARE DIFFERENT.*** Refer to the illustration: (1) Stopper Plate (2) Position Determining Plate.

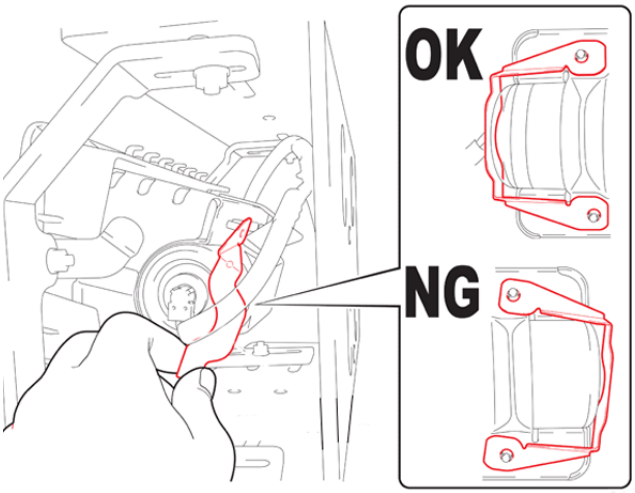

3607886

Warning: Confirm the stopper plate to inflator fitment is correct. *DO NOT* pinch the harness between the inflator and the stopper plate.

15. Loosely install a *new* stopper plate.

    15.1 Place the ***NEW*** stopper plate on the air bag assembly on the side where the harness is already connected.

    15.2 Confirm the end of the inflator sits flat against the stopper plate. If they do not align the inflator is installed backward.

    15.3 Install ***NEW*** stopper plate nuts by hand. They will be torqued on a later step.

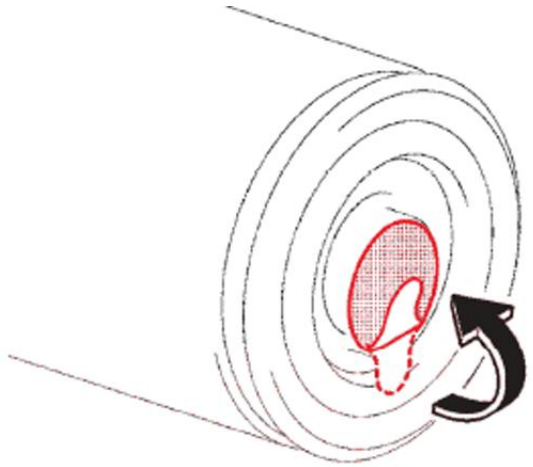

3470378

Note: *DO NOT* fully remove the seal until just before connecting the harness.

16. Fold the seal in order to prevent it from being caught under the position determining plate in the next step.

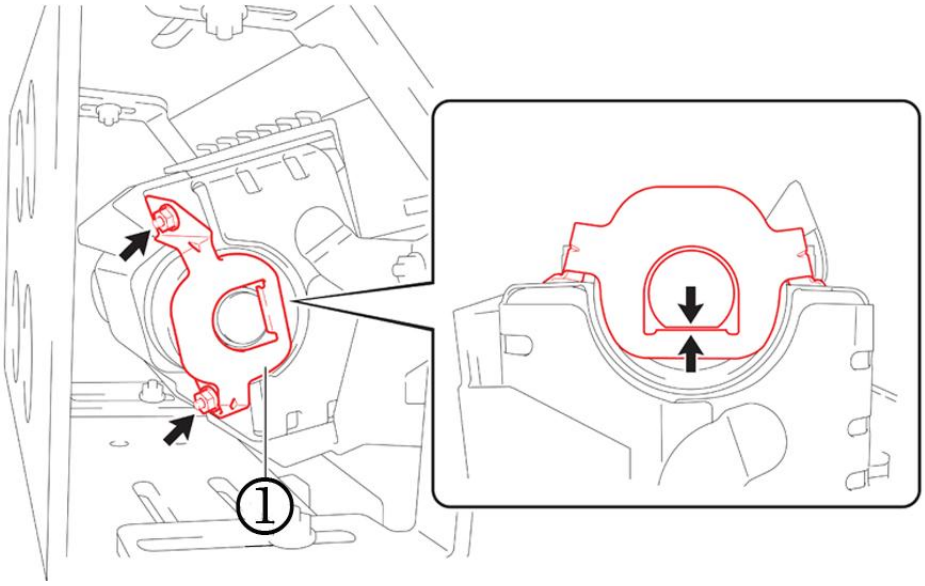

3610413

Warning: Confirm the flats on the position determining plate and inflator are aligned. *DO NOT* pinch the harness between the inflator and the plate.

17. Install the *new* position determining plate.

    17.1 Place the ***NEW*** position determining plate on the air bag assembly on the side with the connector seal.

    17.2 Install ***NEW*** nuts by hand.

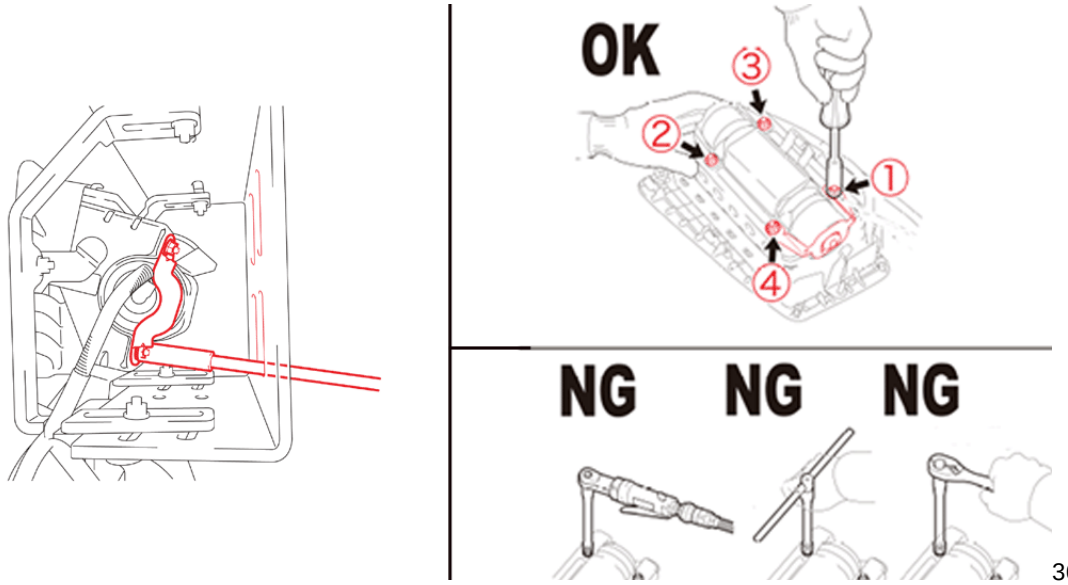

3610416

Caution: There will be some resistance when tightening the nuts because they are self-locking. Confirm the nuts are tightened correctly. *DO NOT* use a power tool, T-handle, or ratchet when tightening the nuts to avoid over-torqueing.

18. Tighten four (4) ***NEW*** plate nuts evenly in several increments in the order shown in the illustration using a 10 mm socket driver while pushing the inflator. (You will encounter some resistance during tightening because these nuts are self-locking nuts.)

Torque Specification: 3.9 Nm (35 in-lb)

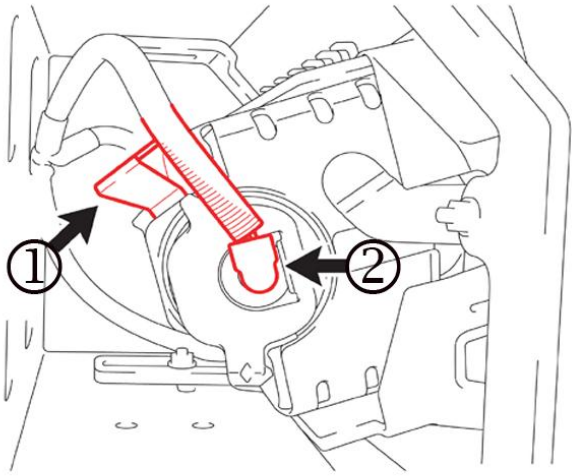

3610412

Warning: The connector should be connected *IMMEDIATELY* after removing the seal. Once the connector is installed it *CANNOT* be removed. If the connector is installed in the incorrect orientation the terminals may be bent or the connector may not fully engage.

19. Connect the inflator connector (2).

    19.1 Remove the connector seal from the inflator.

    19.2 Confirm the alignment of the harness connector as shown in the illustration, and then connect the harness. The connector wires should lead toward the center mounting bracket (1) on the air bag assembly.

20. Remove the air bag assembly from the bracket by removing the two nuts and the air bag assembly. Place the air bag assembly on a cloth.

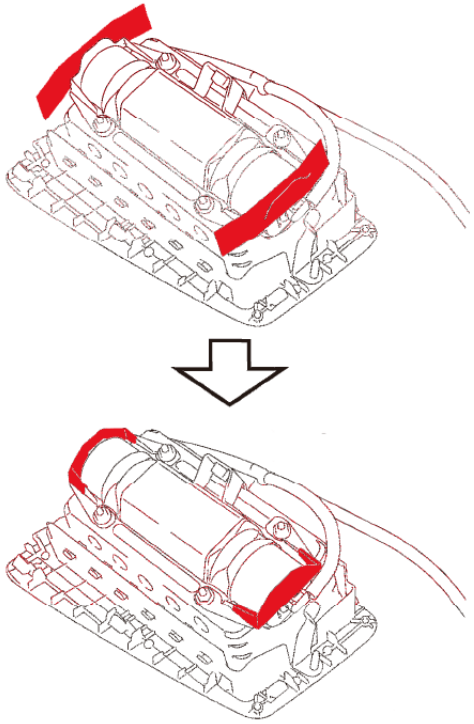

3470478

21. Attach the felt tape to the edges of the stopper and position determining plate.

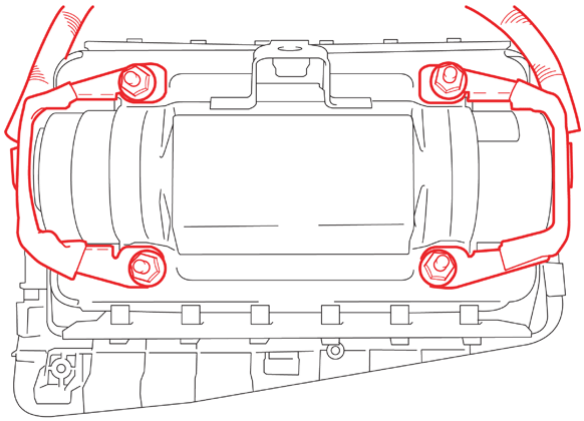

3610415

22. Inspect the air bag before installing it into the vehicle.

    22.1 Confirm that the 4 ***NEW*** plate nuts are installed and tight.

    22.2 Confirm the ***NEW*** stopper and position determining plates are installed.

    22.3 Confirm the flats on the position determining plate and inflator are aligned.

    22.4 Confirm the orientation of the inflator; the yellow wires should face the right side of the vehicle and the red wires should face the left side of the vehicle.

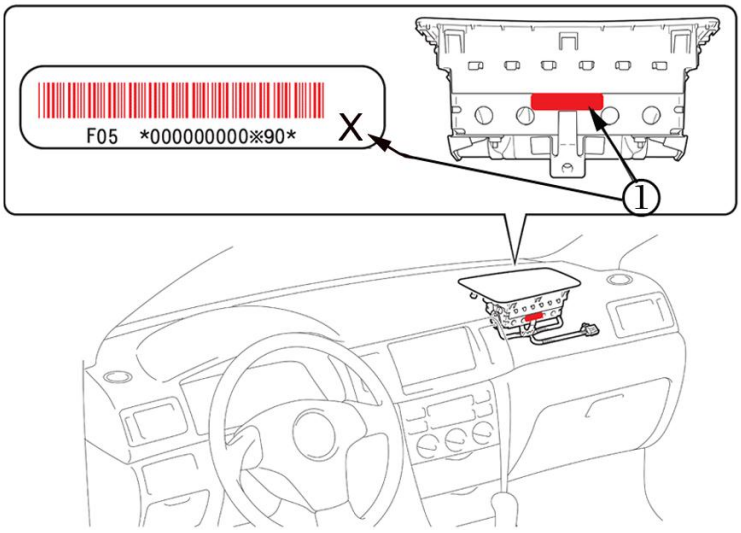

3610495

22.5 Using a pen or marker, put an ‘X’ in the lower right-hand corner of the air bag bar code label (1).

23. Install the instrument panel passenger air bag assembly. Refer to *Air bag Instrument Panel Module Replacement* in SI.

Note: This field action bulletin provides service repair and labor time information for replacing the passenger side air bag inflator module. Other repairs, if required, are to be billed under warranty, goodwill assistance or customer pay.

24. Connect scan tool and check for DTCs.

    24.1 Clear DTCs, if present.

    24.2 If DTCs are still present, record set DTCs on the job card.

25. Install the instrument panel (IP) compartment. Refer to Instrument Panel Compartment Replacement in SI.

WARRANTY TRANSACTION INFORMATION

Submit a transaction using the table below. All transactions should be submitted as a ZFAT transaction type, unless noted otherwise.

Labor Code	Description	Labor Time
9100832	Inspect Front Passenger Air Bag Inflator Bar Code Label For ‘X’ Indicator – Replacement Not Required	0.5
9100833	Replace Front Passenger Air Bag Inflator (Includes Bar Code Label Inspection For ‘X’ Indicator)	1.1 *

* Includes 0.2 hour administrative allowance for return of the used inflator (document preparation and packaging).

CUSTOMER NOTIFICATION – For U.S. and Canada

General Motors will notify customers of this recall on their vehicle.

DEALER RECALL RESPONSIBILITY – For U.S. (U.S. States, Territories, and Possessions)

It is a violation of Federal law for a dealer to deliver a new motor vehicle or any new or used item of motor vehicle equipment (including a tire) covered by this notification under a sale or lease until the defect or noncompliance is remedied.

The U.S. National Traffic and Motor Vehicle Safety Act provides that each vehicle that is subject to a recall of this type must be adequately repaired within a reasonable time after the customer has tendered it for repair. A failure to repair within sixty days after tender of a vehicle is prima facie evidence of failure to repair within a reasonable time. If the condition is not adequately repaired within a reasonable time, the customer may be entitled to an identical or reasonably equivalent vehicle at no charge or to a refund of the purchase price less a reasonable allowance for depreciation. To avoid having to provide these burdensome remedies, every effort must be made to promptly schedule an appointment with each customer and to repair their vehicle as soon as possible. In the recall notification letters, customers are told how to contact the U.S. National Highway Traffic Safety Administration if the recall is not completed within a reasonable time.

DEALER RECALL RESPONSIBILITY – All

All unsold new vehicles in dealers' possession and subject to this recall must be held and inspected/repaired per the service procedure of this recall bulletin before customers take possession of these vehicles.

Dealers are to service all vehicles subject to this recall at no charge to customers, regardless of mileage, age of vehicle, or ownership, from this time forward.

Customers who have recently purchased vehicles sold from your vehicle inventory, and for which there is no customer information indicated on the dealer listing, are to be contacted by the dealer. Arrangements are to be made to make the required correction according to the instructions contained in this bulletin.

GM bulletins are intended for use by professional technicians, NOT a "do-it-yourselfer". They are written to inform these technicians of conditions that may occur on some vehicles, or to provide information that could assist in the proper service of a vehicle. Properly trained technicians have the tools, equipment, safety instructions, and know-how to do a job properly and safely. If a condition is described, DO NOT assume that the bulletin applies to your vehicle, or that your vehicle will have that condition. See your dealer for information on whether your vehicle may benefit from the information.

We Support Voluntary Technician Certification

IMPORTANT SAFETY RECALL

August 2014

Dear General Motors Customer:

This notice is sent to you in accordance with the National Traffic and Motor Vehicle Safety Act.

Toyota has decided that a defect, which relates to motor vehicle safety, exists in certain 2003 and 2004 model year Pontiac Vibe vehicles. You may have previously been notified that your 2003 or 2004 model year Pontiac Vibe was involved in GM safety recall 13112. The Pontiac Vibe was manufactured by New United Motor Manufacturing, Inc. (NUMMI), a joint venture between Toyota and GM.

The original remedy for the safety recall included an inspection and, if necessary, replacement of the airbag inflator module. Based on new instructions from Toyota, the remedy is now being updated. GM will now replace the airbag inflator module on all vehicles covered under the safety recall that have not had the airbag inflator module replaced under the original safety recall. This new safety recall (14491) supersedes safety recall 13112 and should be completed on your vehicle as soon as possible.

According to our records, you had the previous recall completed and the airbag inflator module was <u>not replaced</u>, or you did not have the previous recall completed. In either case, we are asking that you please bring your vehicle to your GM dealer to have the airbag inflator module replaced.

As a result, GM is conducting a safety recall. We apologize for this inconvenience. However, we are concerned about your safety and continued satisfaction with our products.

I M P O R T A N T

- This notice applies to your 2003 or 2004 model year Pontiac Vibe, **VIN** _____**.**
- Your vehicle is involved in GM safety recall 14491.
- Schedule an appointment with your GM dealer.
- This service will be performed for you at **no charge**.

Why is your vehicle being recalled?

Your vehicle is equipped with a front passenger airbag inflator which could have been assembled with improperly manufactured propellant. Improperly manufactured propellant could cause the inflator to rupture and the front passenger airbag to deploy abnormally in the event of a crash, increasing the risk of injury to the occupant.

What will we do?

Your GM dealer will replace your vehicle's front passenger airbag inflator. This service will be performed for you at **no charge**. Because of service scheduling requirements, it is likely that your dealer will need your vehicle longer than the actual service correction time of approximately one hour.

What should you do? Even if you had the previous recall completed and the airbag serviced, you should contact your GM dealer to arrange a service appointment as soon as possible.

Do you have questions? If you have questions or concerns that your dealer is unable to resolve, please contact the appropriate Customer Assistance Center at the number listed below.

Division	Number	Text Telephones (TTY)
Pontiac	1-800-762-2737	1-800-833-7668
Puerto Rico – English	1-800-496-9992	
Puerto Rico – Español	1-800-496-9993	
Virgin Islands	1-800-496-9994	

If after contacting your dealer and the Customer Assistance Center, you are still not satisfied we have done our best to remedy this condition without charge and within a reasonable time, you may wish to write the Administrator, National Highway Traffic Safety Administration, 1200 New Jersey Avenue, SE, Washington, DC 20590, or call the toll-free Vehicle Safety Hotline at 1.888.327.4236 (TTY 1.800.424.9153), or go to http://www.safercar.gov. The National Highway Traffic Safety Administration Campaign ID Number for this recall is 14V-312.

Federal regulation requires that any vehicle lessor receiving this recall notice must forward a copy of this notice to the lessee within ten days.

Jim Moloney
General Director,
Customer and Relationship Services

GM Recall Number: 14491