Applies To: **2001–02 Accord** – Check the iN VIN status for eligibility
2001–03 Civic – Check the iN VIN status for eligibility
2003 Civic Hybrid – Check the iN VIN status for eligibility
2002–04 CR-V – Check the iN VIN status for eligibility
2002 Odyssey – Check the iN VIN status for eligibility

September 26, 2014

Safety Recall: Replacement Driver's Airbag Inflator Can Be Over-Pressurized

(Supersedes 10-039, dated September 12, 2014, to revise the information marked by the black bars)

REVISION SUMMARY

- Not all serial numbers have 13 digits, so this numerical reference was deleted from WARRANTY CLAIM INFORMATION and REPAIR PROCEDURE.
- Under REPAIR PROCEDURE, a step was changed.

BACKGROUND

A small number of airbag modules with defective inflators were sold as replacement parts to replace deployed or damaged airbags.

A manufacturing error can produce over-pressurization of some replacement driver's (front) airbag inflators during airbag deployment. If an affected airbag deploys, the increased internal pressure may cause the inflator casing to rupture. Metal fragments could pass through the airbag cushion material, possibly causing an injury or fatality to vehicle occupants.

CUSTOMER NOTIFICATION

All owners of affected vehicles will be sent a notification of this campaign. An example of the customer notification is included at the end of this service bulletin.

Do an **iN VIN status inquiry** to make sure the vehicle is shown as eligible.

In addition, check for a punch mark below the 5th character of the engine compartment VIN. A punch mark in that location means this campaign has already been completed.

Some vehicles affected by this campaign may be in your used vehicle inventory. These vehicles **must** be repaired before they are sold.

Should a dealership sell an unrepaired vehicle that subsequently causes an injury or damage because of the recalled item, the dealership will be solely responsible to the damaged party, and will be required to defend and indemnify American Honda for any resulting claims. To see if a vehicle in inventory is affected by this campaign, do a VIN status inquiry before selling it.

CORRECTIVE ACTION

Most vehicles will require an inspection only. Do the INSPECTION PROCEDURE and, if needed, install a driver's airbag inflator kit, then return the defective, **undeployed** inflator as directed.

© 2014 American Honda Motor Co., Inc. – All Rights Reserved

Skill Level
R
REPAIR

CUSTOMER INFORMATION: The information in this bulletin is intended for use only by skilled technicians who have the proper tools, equipment, and training to correctly and safely maintain your vehicle. These procedures should not be attempted by "do-it-yourselfers," and you should not assume this bulletin applies to your vehicle, or that your vehicle has the condition described. To determine whether this information applies, contact an authorized Honda automobile dealer.

PARTS INFORMATION

NOTE:

- All the vehicles involved in this campaign require inspection. However, only a very small number of these vehicles require replacement of the airbag inflator compared to the large number of vehicles that will require an inspection. Order an airbag inflator kit **only if** the inspection shows that the inflator must be replaced.
- **Always use new Torx bolts to reinstall the airbags**, even on vehicles that do not need a new inflator. The new Torx bolts are coated with threadlock to make sure they do not come loose.

Torx Airbag Bolts: P/N 90134-S04-A81
(Two bolts are required to install an airbag)

Driver's Airbag Inflator Kit (Accord, Civic, Civic Hybrid, Odyssey):

P/N 04770-S5A-305*

Includes inflator with wire harness, locknuts (4), felt tape, felt washers (4), Torx bolts (2), and shipping instructions.

NOTE: The felt tape and the felt washers are used only on Accords.

Driver's Airbag Inflator Kit (CR-V):

P/N P/N 04770-S9A-306*

Includes inflator with wire harness, locknuts (4), Torx bolts (2), and shipping instructions.

NOTE:

- The inflator kit box must be used to return the old inflator to its supplier, **ideally within 48 hours of the repair**. Be careful not to damage the inflator kit box.
- If the defective, undeployed inflator is not returned, the warranty claim for that vehicle will be charged back to your dealership.
- Follow the shipping instructions supplied with the inflator kit. If you have any questions about shipping, call Warranty Parts Inspection (WPI) at **937-642-2737**.

*The kit contains FedEx Ground shipping documents and instructions for the airbag inflator. If you are a dealer in Alaska or Hawaii, call the WPI administrative office at **937-642-2737** for FedEx Air shipping documents and instructions; do not use the documentation included in the airbag inflator kit.

WARRANTY CLAIM INFORMATION

NOTE:

- If the airbag inflator is replaced, to avoid non-payment of warranty claims, the serial number on the box of the new airbag inflator must be entered in the **Diagnostic Trouble Codes** field on each warranty claim. For more information, refer to step 1 of REPAIR PROCEDURE B.
- To avoid a warranty claim being charged back to your dealership, the defective, undeployed inflator must be returned to its supplier.
- Follow the shipping instructions supplied with the inflator kit. If you have any questions about shipping, call Warranty Parts Inspection (WPI) at **937-642-2737**.

OP#	Description	FRT
7525A5	Remove the driver's airbag, check the inflator serial number, and reinstall the original airbag.	0.3
7525A6	Remove the driver's airbag, check the inflator serial number, and REPLACE the airbag inflator.	0.5

Failed Part: P/N 06770-S84-A11ZA
Defect Code: 5US00
Symptom Code: R5400
Skill Level: Repair Technician

INSPECTION PROCEDURE

NOTE:

- If, before removing the airbag, you suspect that it may not be the correct airbag for the vehicle or a counterfeit, **do not remove the airbag**. Contact your DPSM for assistance.
- Do not open the inflator kit until you have confirmed a Takata inflator is installed in the vehicle because if you have to return the inflator, the kit must be unopened.
- If the vehicle you are inspecting has an Autoliv airbag and inflator, **do not disassemble the airbag** because the inflator cannot be reinstalled, and you will have to replace the airbag module.

1. Remove the driver's airbag:
   - Refer to page 23-278 of the *1998–2002 Accord Service Manual*, or
   - Refer to page 23-137 of the *2001–2005 Civic Service Manual*, or
   - Refer to page 23-112 of the *2003–2004 Civic Hybrid Service Manual*, or
   - Refer to page 23-131 of the *2002–2004 CR-V Service Manual*, or
   - Refer to page 23-368 of the *1999–2004 Odyssey Service Manual*, or
   - Online, enter keywords **DRIVER AIR**, and select **Driver's Airbag Replacement** from the list.

2. Visually inspect the airbag and the inflator for any unusual writing or markings.
   - If there is nothing unusual about the airbag or the inflator, go to step 3.
   - If there is unusual markings, like an incorrect label or a model year written in marker, the airbag and inflator may not be the correct airbag and/or inflator for the vehicle or it may be a counterfeit part. For more information about counterfeit airbags, you can refer to *safercar.gov*, enter keywords **MANAGING COUNTERFEIT**, and select *Recommended Dealer Guidance for Managing Counterfeit Air Bags* from the list. **If you suspect that the airbag or inflator is counterfeit, do not continue this procedure**. Contact your DPSM for assistance.

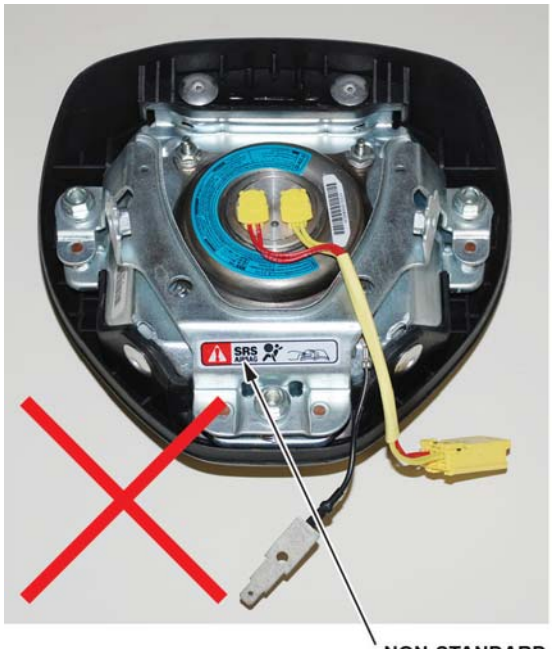

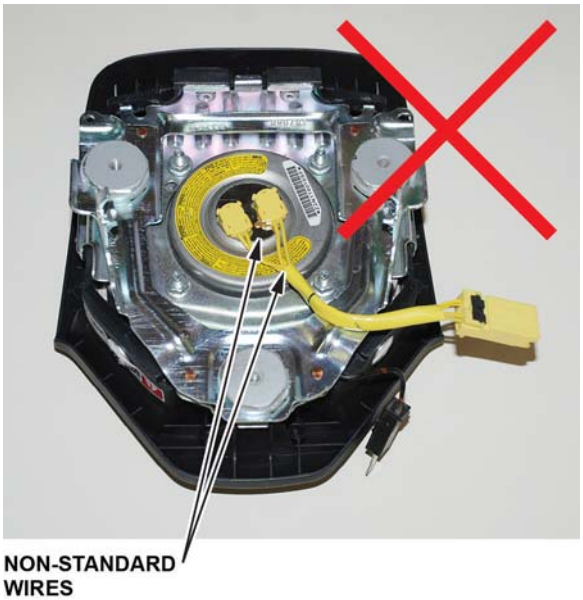

3. Determine if the airbag is made by Autoliv or Takata by comparing inflators to those in the images below.

   NOTE: The Autoliv serial number label is different from the Takata label; the Autoliv has 11 characters, the Takata has 9.

   AUTOLIV (not affected)

   TAKATA

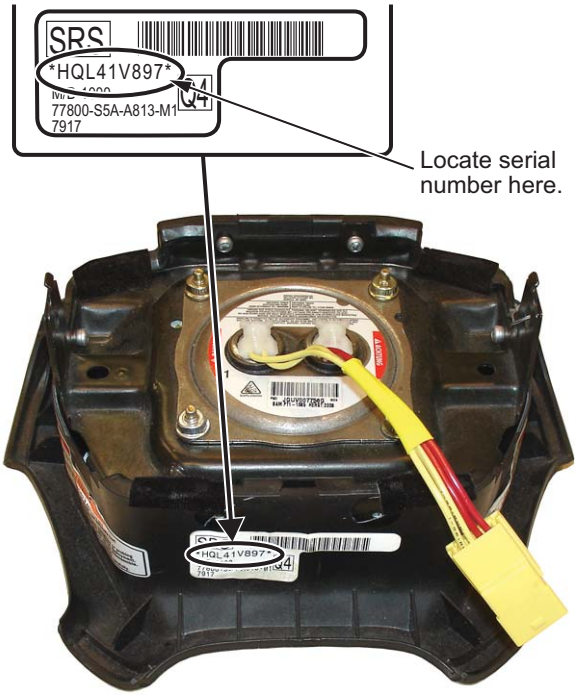

   - If the airbag is made by Autoliv, the airbag is OK. Go to REPAIR PROCEDURE A. If you already received a replacement inflator, return the unopened kit to American Honda.
   - If the airbag is made by Takata, go to step 3.

4. Locate the serial number on the bottom of the airbag. Make sure you also have the VIN, then go to the iN:
   - Click on **Service**.
   - Click on **Service Bay**.
   - Click on **Airbag inflator recall SB 10-039**.
   - Enter the VIN and the airbag serial number.

   The iN will indicate if the airbag is OK or if the airbag inflator must be replaced. If the airbag is OK, go to REPAIR PROCEDURE A. If the airbag inflator must be replaced, go to REPAIR PROCEDURE B.

TAKATA

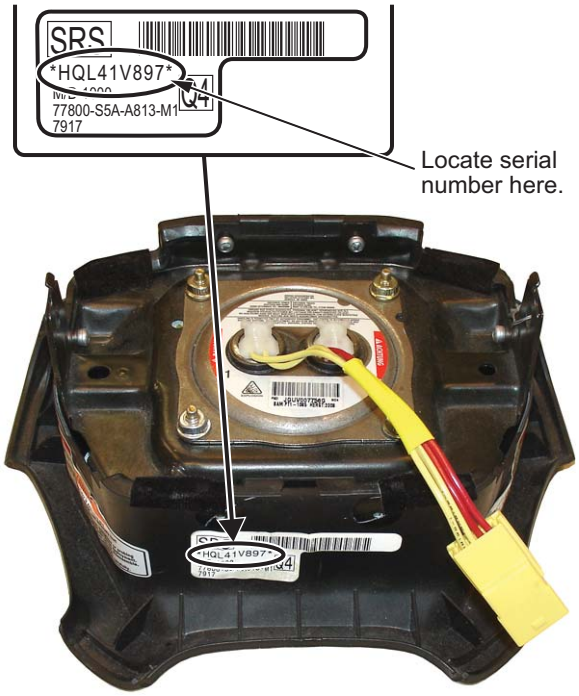

REPAIR PROCEDURE A

1. Reinstall the airbag using new Torx bolts, and torque the bolts to **10 N·m (7.0 lb-ft)**.
2. Center-punch a completion mark below the fifth character of the engine compartment VIN:

1HGCXXXXXXXXXXXXX

Center-punch here.

REPAIR PROCEDURE B – ACCORD ONLY

NOTE: Be careful not to damage any parts when replacing the inflator, and follow the procedure exactly.

1. Write down the serial number located on the right side of the new inflator's box. For the warranty claim to be paid, your warranty clerk must enter this serial number in the **Diagnostic Trouble Codes** field on the warranty claim.

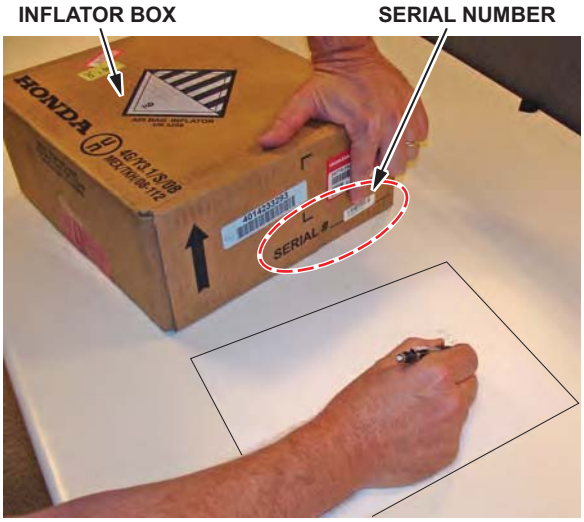

2. Place the airbag, face down, on a clean shop towel.

3. Remove the four horn plate mounting bolts, the mounting bolt felt washers, and the horn plate. The felt washers will not be reused.

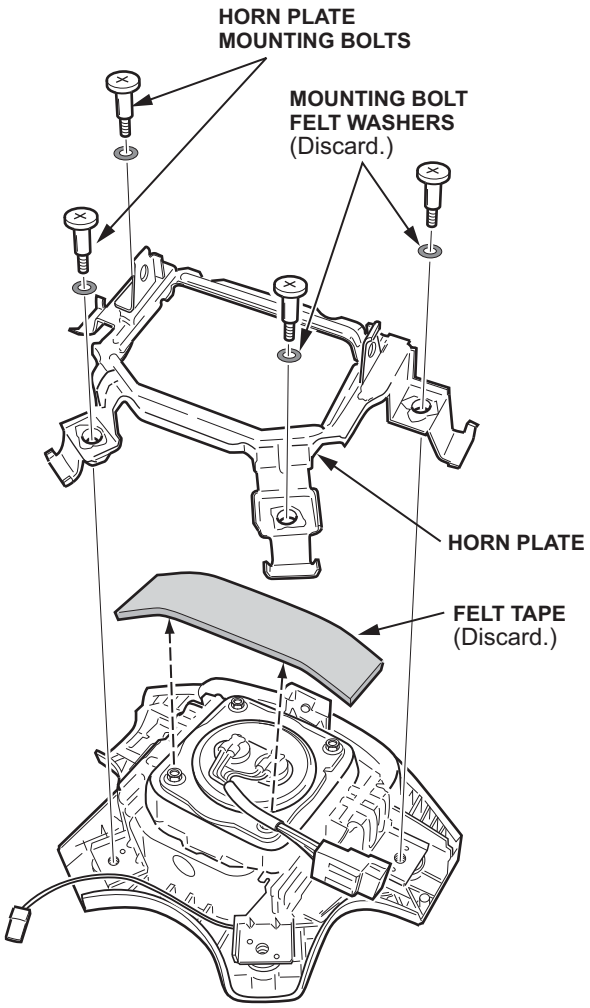

4. Remove and discard the felt tape covering the lower two inflator locknuts.

5. Using needle-nose vise grips or a 3/8 in. 6-point socket, remove the four locknuts from the inflator. The locknuts will not be reused.

   NOTE: Do not remove the inflator from the airbag until you complete step 6.

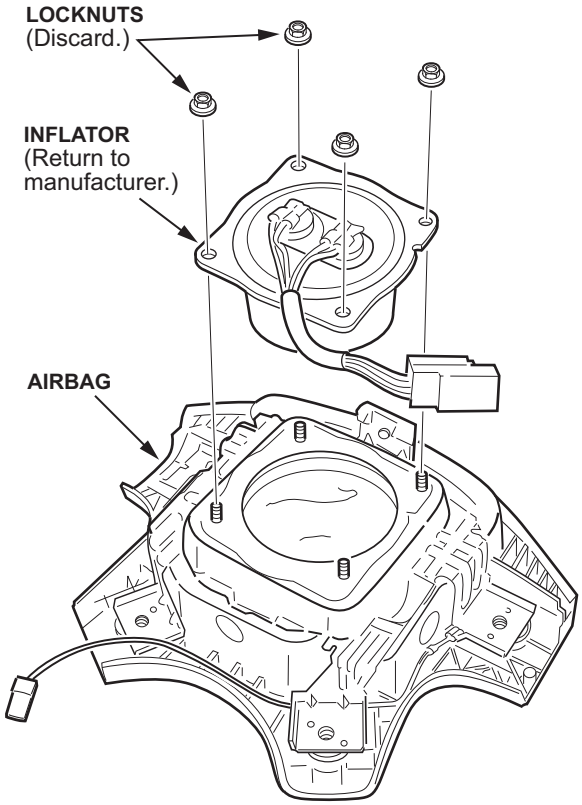

6. Use shop air to clean any debris that may be on the inflator, then remove the inflator from the airbag.

   NOTE:
   - Do not allow any debris to enter the inflator opening in the airbag.
   - **Do not deploy the inflator.** The inflator must be returned to its supplier in the box the new inflator came in.

7. Turn over the airbag (inflator side down), and shake it to remove any debris from the inflator opening.

8. Install the new inflator in the airbag with new locknuts. Torque the locknuts to **3.9 N·m (2.8 lb-ft, 34 lb-in).**

   NOTE: The new inflator is slightly different than the original inflator, but they are still interchangeable.

9. Cover the lower two inflator locknuts with new felt tape.

10. Reinstall the horn plate with new felt washers on its mounting bolts. Torque the mounting bolts to **3.4 N·m (2.5 lb-ft, 30 lb-in)**, then make sure the horn plate moves freely.
11. Reinstall the driver's airbag using new Torx bolts:
    - Refer to page 23-279 of the service manual, or
    - Online, enter keywords **DRIVER AIR**, and select **Driver's Airbag Replacement** from the list.
12. Center-punch a completion mark below the fifth character of the engine compartment VIN:

1HGCXXXXXXXXXXXX

Center-punch here.

13. Give your warranty clerk the inflator serial number you wrote down in step 1. For the warranty claim to be paid, your warranty clerk must enter the appropriate serial number in the **Diagnostic Trouble Codes** field on the warranty claim.

REPAIR PROCEDURE B – CIVIC, CIVIC HYBRID, CR-V, AND ODYSSEY

NOTE: Be careful not to damage any parts when replacing the inflator, and follow the procedure exactly.

1. Write down the serial number located on the right side of the new inflator's box. For the warranty claim to be paid, your warranty clerk must enter this serial number in the **Diagnostic Trouble Codes** field on the warranty claim.

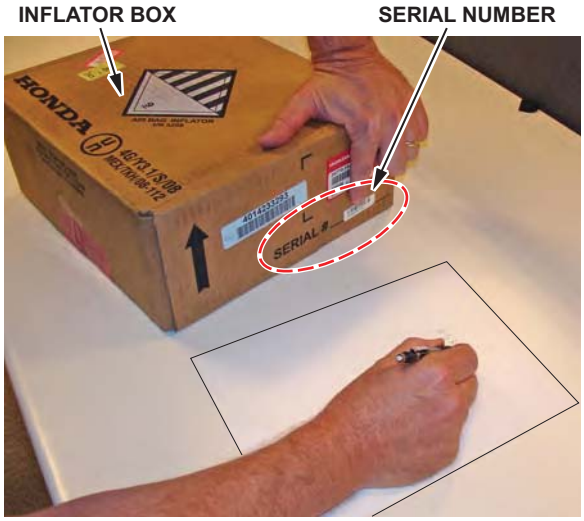

2. Place the airbag, face down, on a clean shop towel.
3. Using needle-nose vise grips or a 3/8 in. 6-point socket, remove the four locknuts from the inflator. The locknuts will not be reused.

   NOTE: Do not remove the inflator from the airbag until you complete step 4.

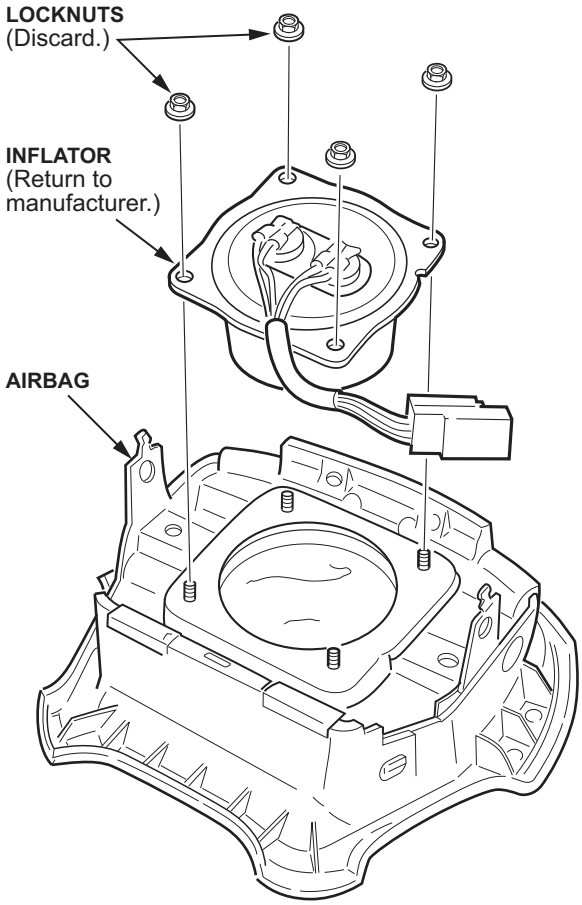

4. Use shop air to clean any debris that may be on the inflator, then remove the inflator from the airbag.

   NOTE:
   - Do not allow any foreign objects to enter the inflator opening in the airbag.
   - **Do not deploy the inflator.** The inflator must be returned to its supplier in the box the new inflator came in.
5. Turn over the airbag (inflator side down), and shake it to remove any debris from the inflator opening.
6. Install the new inflator in the airbag with new locknuts. Torque the locknuts to **3.9 N·m (2.8 lb-ft, 34 lb-in).**

   NOTE:
   - The new inflator is slightly different than the original inflator, but they are still interchangeable.
   - There may be some minor surface rust or corrosion on the new inflator; this is OK.

7. Reinstall the driver's airbag using new Torx bolts:
   - Refer to the appropriate service manual, or
   - Online, enter keywords **DRIVER AIR**, and select **Driver's Airbag Replacement** from the list.
8. Center-punch a completion mark below the fifth character of the engine compartment VIN:

1HGCXXXXXXXXXXXX

Center-punch here.

9. Give your warranty clerk the inflator serial number you wrote down in step 1. For the warranty claim to be paid, your warranty clerk must enter the appropriate serial number in the **Diagnostic Trouble Codes** field on the warranty claim.

Example of Customer Letter No. 1

December 2011

Safety Recall: Driver's Airbag Inflator - NHTSA Recall 11V-260

Dear Honda Owner:

This notice is sent to you in accordance with the requirements of the National Traffic and Motor Vehicle Safety Act.

What is the reason for this notice?
Honda has decided that a defect related to motor vehicle safety exists in certain 2002 model year Odyssey vehicles, 2002–2003 model year Civic vehicles, 2003 model year Civic Hybrid vehicles and 2002–2004 CR-V vehicles. In some vehicles, the driver's airbag inflator could produce excessive internal pressure. If an affected airbag deploys, the increased internal pressure may cause the inflator to rupture. Metal fragments could pass through the airbag cushion material possibly causing injury or fatality to vehicle occupants.

What should you do?
Call any authorized Honda dealer and make an appointment to have your vehicle inspected. The dealer will inspect and, if necessary, replace the driver's airbag inflator. The inspection process may be completed in approximately 30 minutes; however, your vehicle will need to be at the dealer for a longer period of time. We recommend that you plan to leave your vehicle for half a day to allow the dealer flexibility in scheduling. This work will be done *free of charge*.

Who to contact if you experience problems
If you are not satisfied with the service you receive from your Honda dealer, you may write to:

American Honda Motor Co., Inc.
Honda Automobile Customer Service
Mail Stop 500-2N-7A
1919 Torrance Blvd.
Torrance, CA 90501-2746

If you believe that American Honda or the dealer has failed or is unable to remedy the defect in your vehicle, without charge, within a reasonable period of time (60 days from the date you first contact the dealer for a repair appointment), you may submit a complaint to:

Administrator
National Highway Traffic Safety Administration
1200 New Jersey Ave., SE
Washington, DC 20590

Or call the toll-free Safety Hotline at 1-888-327-4236 (TTY 1-800-424-9153), or go to *http://www.safercar.gov*.

Lessor information
Federal law requires that any vehicle lessor receiving this recall notice must forward a copy of this notice to the lessee within 10 days.

If you have questions
If you have any questions about this notice, or need assistance with locating a Honda dealer, please call Honda Automobile Customer Service at 800-999-1009, and select option 4. You can also locate a dealer online at *Hondacars.com*.

We apologize for any inconvenience this campaign may cause you.

Sincerely,

American Honda Motor Co., Inc.
Honda Automobile Division

Example of Customer Letter No. 2

December 2011

Safety Recall: Driver's Airbag Inflator - NHTSA Recall 11V-260

Dear Honda Owner:

This notice is sent to you in accordance with the requirements of the National Traffic and Motor Vehicle Safety Act.

What is the reason for this notice?
Honda has decided that a defect related to motor vehicle safety exists in certain 2001–2002 model year Accord and Civic vehicles, 2002 model year Odyssey and 2002–2003 CR-V vehicles. In some vehicles, the driver's airbag inflator could produce excessive internal pressure. If an affected airbag deploys, the increased internal pressure may cause the inflator to rupture. Metal fragments could pass through the airbag cushion material possibly causing injury or fatality to vehicle occupants.

What should you do?
You must have your vehicle's driver's airbag inflator inspected again and, if necessary, replaced; this work will be done free of charge. Even though you previously had the driver's airbag inflator inspected, you must have it inspected again as we have determined that the prior inspection criteria were insufficient and your inflator may, in fact, need to be replaced to avoid the possibility of an over-pressurized deployment. Call any authorized Honda dealer and make an appointment to have your vehicle inspected. The dealer will inspect, and if necessary replace the driver's airbag inflator. The inspection process may be completed in approximately 30 minutes; however, your vehicle will need to be at the dealer for a longer period of time. We recommend that you plan to leave your vehicle for half a day to allow the dealer flexibility in scheduling. We apologize for any inconvenience this may cause, but it is necessary for your safety.

Who to contact if you experience problems
If you are not satisfied with the service you receive from your Honda dealer, you may write to:

American Honda Motor Co., Inc.
Honda Automobile Customer Service
Mail Stop 500-2N-7A
1919 Torrance Blvd.
Torrance, CA 90501-2746

If you believe that American Honda or the dealer has failed or is unable to remedy the defect in your vehicle, without charge, within a reasonable period of time (60 days from the date you first contact the dealer for a repair appointment), you may submit a complaint to:

Administrator
National Highway Traffic Safety Administration
1200 New Jersey Ave., SE
Washington, DC 20590

Or call the toll-free Safety Hotline at 1-888-327-4236 (TTY 1-800-424-9153), or go to *http://www.safercar.gov*.

Lessor information
Federal law requires that any vehicle lessor receiving this recall notice must forward a copy of this notice to the lessee within 10 days.

If you have questions
If you have any questions about this notice, or need assistance with locating a Honda dealer, please call Honda Automobile Customer Service at 1-800-999-1009, and select option 4. You can also locate a dealer online at *Hondacars.com*.

We apologize for any inconvenience this campaign may cause you.

Sincerely,

American Honda Motor Co., Inc.
Honda Automobile Division