September 26, 2014 BTB 51970-52683 REV2 (1409)

Recall: Driver's Airbag Inflator May Produce Excessive Pressure After Long-Term Exposure to High Absolute Humidity

Supersedes 14-029, dated September 12, 2014; to revise the information highlighted in yellow

AFFECTED VEHICLES

Year	Model	Trim	VIN Range
2003	3.2CL	ALL	Check the iN VIN status for eligibility
2003–06	MDX	ALL	Check the iN VIN status for eligibility
2002–03	3.2TL	ALL	Check the iN VIN status for eligibility

REVISION SUMMARY

- Not all serial numbers have 13 digits, so this numerical reference was deleted from WARRANTY CLAIM INFORMATION and REPAIR PROCEDURE.
- Under REPAIR PROCEDURE, a step was changed and a note added.

BACKGROUND

Certain Acura vehicles operated in areas known for high absolute humidity and high heat may contain a driver's airbag that, over time, may be affected by exposure to the humidity, which could produce excessive internal pressure. If an affected airbag deploys, the increased internal pressure may cause the inflator casing to rupture upon deployment. Metal fragments could pass through the airbag cushion material, possibly causing injury or fatality to vehicle occupants.

Affected vehicles were sold and/or registered in the following geographic locations: Alabama, California, Florida, Georgia, Hawaii, Louisiana, Mississippi, South Carolina, Texas, Puerto Rico, and the U.S. Virgin Islands.

CLIENT NOTIFICATION

Owners of affected vehicles will receive a notification of this campaign.

Do an iN VIN status inquiry to make sure the vehicle is shown as eligible.

Some vehicles affected by this campaign may be in your used vehicle inventory. These vehicles must be repaired before they are sold.

Should your dealership sell an unrepaired vehicle that subsequently causes injury or damage because of the recalled item, the dealership will be solely responsible to the damaged party, and will be required to defend and indemnify American Honda for any resulting claims. To see if a vehicle in inventory is affected by this recall, do a VIN status inquiry before selling it.

CORRECTIVE ACTION

Replace the driver's airbag inflator, then return the original, undeployed inflator as directed.

CLIENT INFORMATION: The information in this bulletin is intended for use only by skilled technicians who have the proper tools, equipment, and training to correctly and safely maintain your vehicle. These procedures should not be attempted by "do-it-yourselfers," and you should not assume this bulletin applies to your vehicle, or that your vehicle has the condition described. To determine whether this information applies, contact an authorized Acura automobile dealer.

© 2014 American Honda Motor Co., Inc. – All Rights Reserved

PARTS INFORMATION

NOTE: Always use new Torx bolts to reinstall the airbags. The new Torx bolts are coated with threadlock to make sure they do not come loose.

Part Name	Part Number	Quantity
2003 3.2CL Driver's Airbag Inflator Kit	04770-S5A-305	1
2003–06 MDX Driver's Airbag Inflator Kit	04770-S9A-306	1
2002–03 3.2TL Driver's Airbag Inflator Kit	04770-S5A-305	1

NOTE:

- The inflator kit box must be used to return the recalled inflator to its supplier, ideally within 48 hours of the repair. Be careful not to damage the inflator kit box.
- If the recalled, undeployed inflator is not returned, the warranty claim for that vehicle will be charged back to your dealership.
- Follow the shipping instructions supplied with the inflator kit. If you have any questions about shipping, call Warranty Parts Inspection (WPI) at **937-642-2737**.

WARRANTY CLAIM INFORMATION

NOTE:

- To avoid non-payment of warranty claims, the serial number on the box of the new airbag inflator must be entered in the Diagnostic Trouble Codes field on each warranty claim. For more information, refer to step 2 of REPAIR PROCEDURE.
- To avoid a warranty claim being charged back to your dealership, you must return the original, undeployed inflator to its supplier. Follow the shipping instructions supplied with the inflator kit. If you have any questions about shipping, call Warranty Parts Inspection (WPI) at **937-642-2737**.

Year/Model	Operation Number	Description	Flat Rate Time	Defect Code	Symptom Code	Template ID	Failed Part Number
2003 3.2CL	7521H1	Replace the driver's airbag inflator.	0.5 hr	5VZ00	JH300	14-029N	06770-SY8-A90ZA
2003–06 MDX	7521H1		0.5 hr	5VZ00	JH400	14-029P	06770-S3V-A20ZB
2002–03 3.2TL	7521H1		0.5 hr	5VZ00	JH500	14-029Q	06770-S0K-A90ZA

REPAIR PROCEDURE

NOTE:

- Be careful not to damage any parts when replacing the inflator, and **follow the procedure exactly**.
- If, before removing the airbag, you suspect that it may be the incorrect airbag for the vehicle or a counterfeit, **do not remove the airbag**. Contact your DPSM for assistance.

1. Remove the driver's airbag.
2. Write down the serial number located on the right side of the new inflator's box. For the warranty claim to be paid, your warranty clerk must enter this serial number in the Diagnostic Trouble Codes field on the warranty claim.

3. Place the airbag, face down, on a clean shop towel.
4. Visually inspect the airbag and the inflator for any unusual writing or markings.
   - If there is nothing unusual about the airbag or the inflator, go to step 5.
   - If there are any unusual markings, like an incorrect label or a model year written in marker, the airbag and inflator may not be the correct airbag and/or inflator for the vehicle or it may be a counterfeit part. For more information about counterfeit airbags, you can refer to *safercar.gov*, enter keywords **MANAGING COUNTERFEIT**, and select **Recommended Dealer Guidance for Managing Counterfeit Air Bags** from the list. **If you suspect that the airbag or inflator is counterfeit, do not continue this procedure**. Contact your DPSM for assistance.

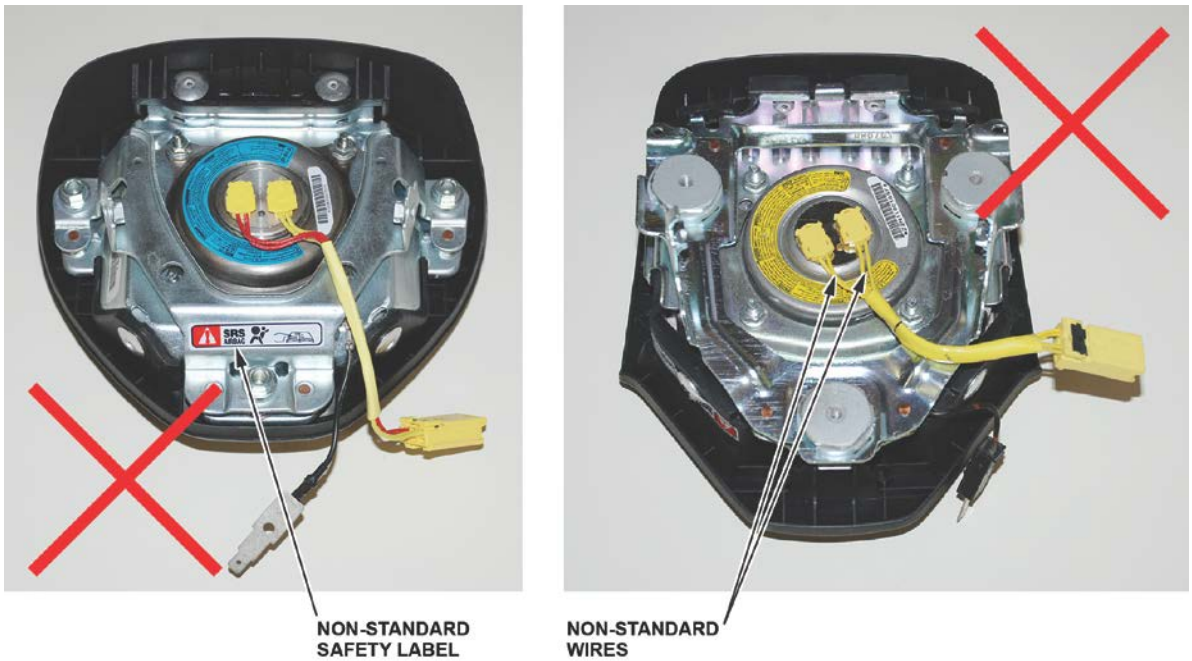

5. If there is no horn plate installed, go to step 7. If there is a horn plate installed, remove the four horn plate mounting bolts, the mounting bolt felt washers, the horn plate, and remove the felt tape covering the lower two inflator locknuts. The felt washers and felt tape will not be reused.

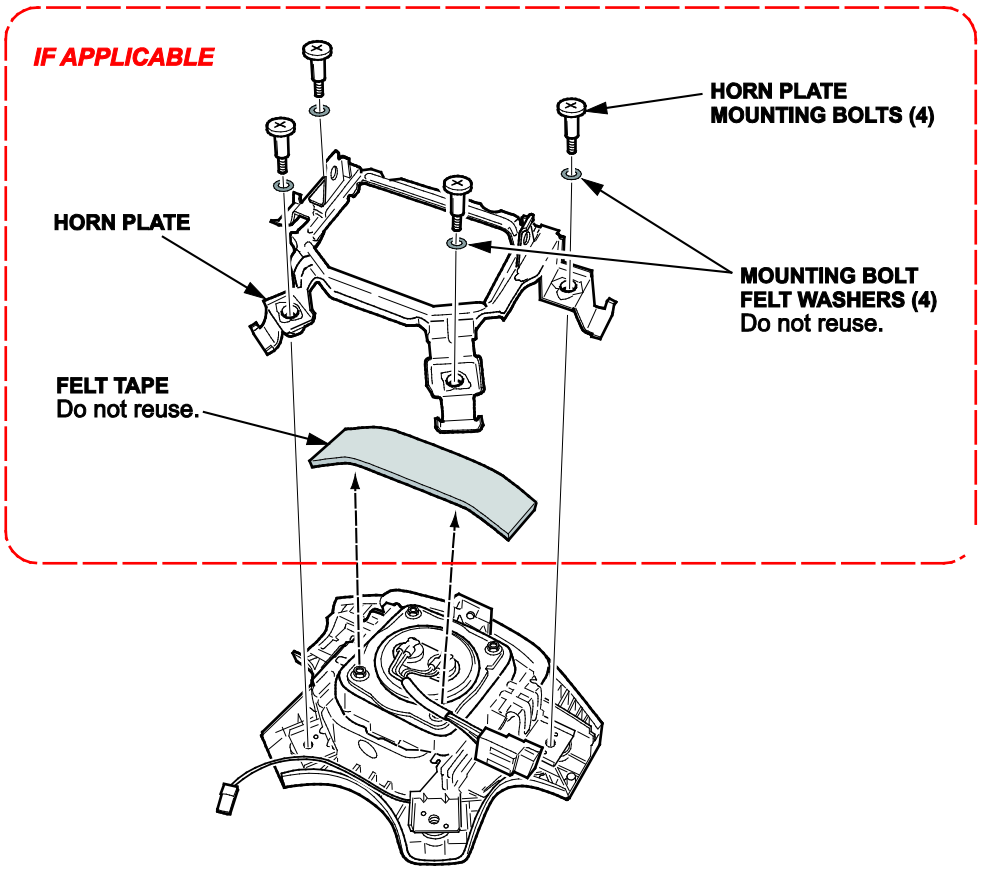

6. Using needle-nose vise grips or a 3/8 in. 6-point socket, remove the four locknuts from the inflator. The locknuts will not be reused.

   NOTE: Do not remove the inflator from the airbag until you complete step 7.

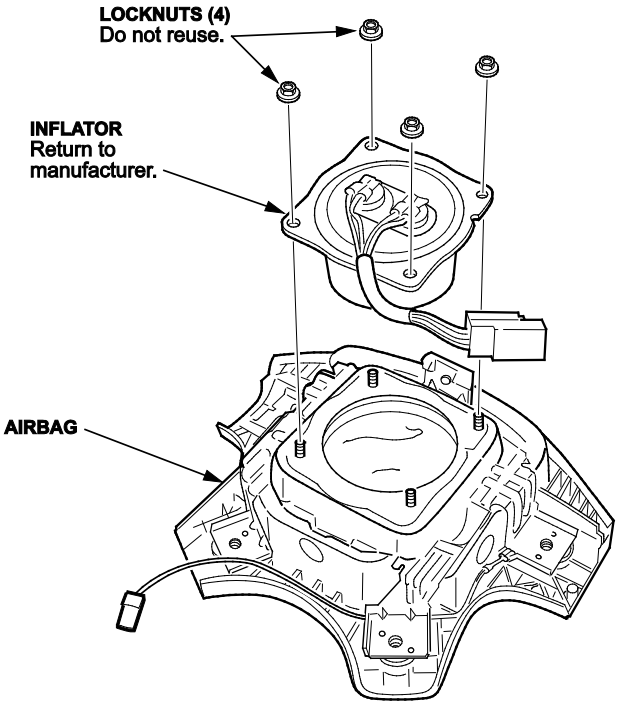

7. Use shop air to clean any debris that may be on the inflator, then remove the inflator from the airbag.

   NOTE:

   - Do not allow any debris to enter the inflator opening in the airbag.
   - Do not deploy the inflator. The inflator must be returned to its supplier in the box the new inflator came in. Follow the shipping instructions supplied with the inflator kit. If you have any questions about shipping, call Warranty Parts Inspection (WPI) at **937-642-2737**.

8. Turn over the airbag (inflator side down), and shake it to remove any debris from the inflator opening.

9. Install the new inflator in the airbag with new locknuts. Torque the locknuts to **3.9 N·m (2.8 lb-ft, 34 lb-in)**.

   NOTE:

   - The new inflator is slightly different than the original inflator, but they are still interchangeable.
   - There may be some minor surface rust or corrosion on the new inflator; this is OK.

10. Cover the lower two inflator locknuts with new felt tape.

11. Reinstall the horn plate with new felt washers on its mounting bolts. Torque the mounting bolts to **3.4 N·m (2.5 lb-ft, 30 lb-in)**, then make sure the horn plate moves freely.

12. Reinstall the driver's airbag using new Torx bolts.

13. Give your warranty clerk the inflator serial number you wrote down in step 2. For the warranty claim to be paid, your warranty clerk must enter the appropriate serial number in the Diagnostic Trouble Codes field on the warranty claim.

END