LiquidSpring™ LLC
3416 RASCAL DRIVE
LAFAYETTE, IN 47909
PH: 765-474-7816, FAX: 765-474-7826
www.liquidspring.com

Important Safety Recall

NHTSA Recall Number: 14E-034

Date: August14, 2014

Subject: Volume Mount Bracket Safety Recall Notice

Dear LiquidSpring Suspension Owner,

This notice is sent to you in accordance with the requirements of the National Highway Traffic and Motor Vehicle Safety Act.

LiquidSpring LLC has decided that a defect which relates to motor vehicle safety exists in a component in certain LS suspension systems installed on Ford E450, F450, F550, and GM G3500/4500 chassis, and only suspension systems for the above chassis are included in the safety recall.

These suspension systems are typically installed on ambulances, shuttle buses, RV's, and other specialty vehicles. The affected system component is the fluid volume mount bracket. The bracket may develop a fracture that may result in the fluid volume becoming supported only by hose connection(s). Continued vehicle use in this fluid volume support condition [hose connection(s) only] may result in the fluid volume contacting the ground which could cause damage to the chassis and/or other vehicles, and possibly result in a crash. See Figure 1 for location of fluid volume mount brackets on the chassis.

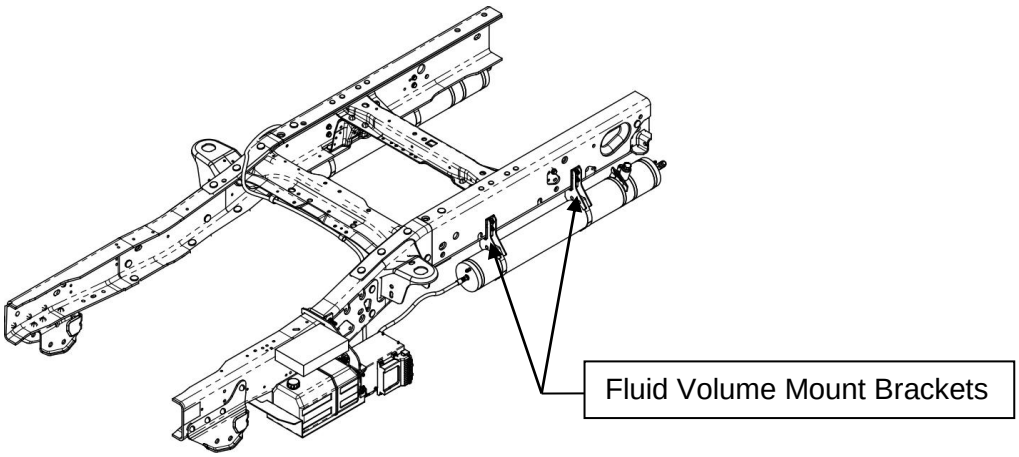

Figure 1. Fluid Volume Mount Brackets

You are receiving this notice because records indicate that you may have purchased a vehicle equipped with an affected LS suspension system. LiquidSpring recommends that you inspect

LiquidSpring™ LLC
3416 RASCAL DRIVE
LAFAYETTE, IN 47909
PH: 765-474-7816, FAX: 765-474-7826
www.liquidspring.com

the fluid volume mount brackets on your vehicle as soon as possible, and if a fracture is found, do not use the vehicle further until the brackets can be replaced.

The affected suspension systems have a serial number range 2,000,011 – 2,000,337. The suspension system serial number may be found on the serial number plate located on the driver side front frame hanger of the suspension. See Figures 2 & 3 for the location and view of the serial number plate.

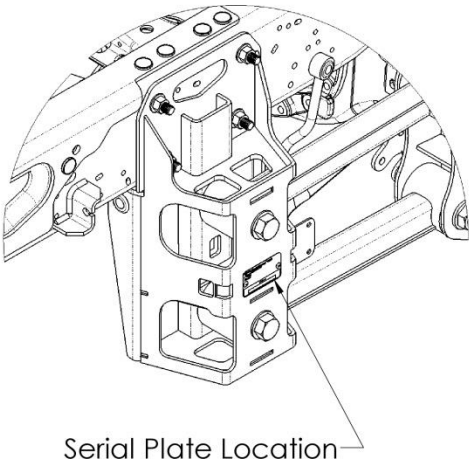

Figure 2. Serial Plate Location

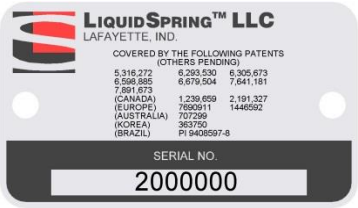

Figure 3. Serial Plate

If you have a Ford E450, F450, F550, GM3500/4500 chassis equipped with a LiquidSpring suspension system within the above serial number range, please contact LiquidSpring to arrange service to have the fluid volume mount brackets replaced, free of charge.

The LiquidSpring contact information is as follows:

Phone: 765-474-7816 ext. 109 8:00 a.m. – 5:00 p.m. EST
Email: warranty@liquidspring.com

If LiquidSpring fails or is unable to arrange service as described above without charge, you may submit a complaint to the Administrator, National Highway Traffic Safety Administration, 1200 New Jersey Avenue, S.E., Washington, DC 20590 or call toll-free Auto Safety Hotline at 1-888-327-4236 (TTY 1-800-424-9153); or go to www.safercar.gov.

Commitment to safety, quality and respect for the customer are our highest priorities. Please accept our sincere apology for any inconveniences that may result from replacing these 2nd volume mount brackets.

Sincerely,

Dean F. Bartolone

Dean F. Bartolone - President