Service Bulletin

SAF-HOLLAND Group

Trailer Air Suspension Systems

Cast Beam Pivot Bolt Replacement

MAY 2014

SAF-HOLLAND® has identified certain CBX suspensions that have a pivot bolt that may not meet our specifications. The CBX suspensions referenced in this bulletin were manufactured between the dates of October 8, 2013 through November 30, 2013 (suspension serial number range 51 13 281 xxxx through 51 13 334 xxxx). It will be necessary to have all pivot bolts changed out on the units affected.

You have been identified as the owner of a trailer which may be affected by this condition. You will be required to exchange the pivot bolts, nuts, and washers on each axle of your trailer suspension systems with kits that will be supplied by SAF-HOLLAND® at no charge. You will be sent one service repair kit, SRK-710, per axle on your trailer. Each kit will include all of the appropriate hardware to facilitate this repair procedure.

For this pivot bolt changeover, SAF-HOLLAND® has agreed to cover 2.0 hour(s) repair time per axle. Once the repair procedure is complete, you will need to supply the trailer manufacture your suspension serial number, vehicle identification number, in-service date, and date of repair completion for labor reimbursement ***Table 1***.

For your convenience, a form is provided with all of the required information needed to facilitate the labor reimbursement. Once work is completed, please submit all forms to your OEM for recording and reimbursement.

We apologize for any inconvenience this may cause; SAF-HOLLAND® is committed to serving our customers with quality products.

Model Identification

The location of the serial tag is found on roadside hanger, fixed frame suspension ***(Figure 1)***, or rear cross member, slider assembly ***(Figure 2)***.

The sample tag shown will help you interpret the information on the SAF-HOLLAND®, Inc. serial tag. The part number is on the first line. The model number along with the suspension capacity are on the second line. The third line contains the serial number.

Figure 1

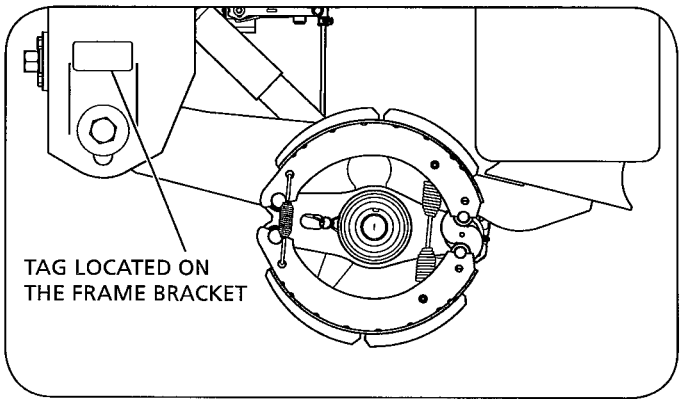

Figure 2

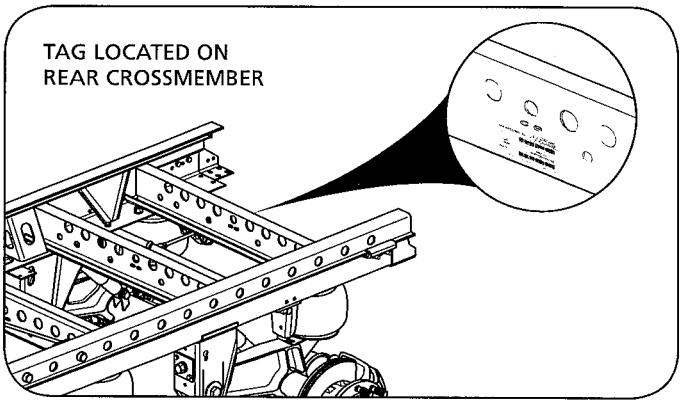

Figure 3

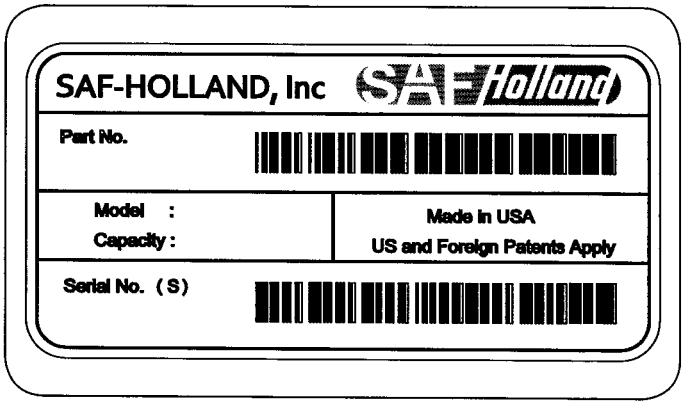

XL AS200305B-en-US · 2014-05-15 · Amendments and Errors Reserved · © SAF-HOLLAND, Inc., SAF-HOLLAND, HOLLAND, SAF, and logos are trademarks of SAF-HOLLAND S.A., SAF-HOLLAND GmbH, and SAF-HOLLAND, Inc.

Table 1

OEM	SUSPENSION SERIAL NUMBER(S)	TRAILER VIN	IN-SERVICE DATE	COMPLETION DATE

 · © SAF HOLLAND, Inc., SAF-HOLLAND, HOLLAND, SAF, and logos are trademarks of SAF-HOLLAND S.A., SAF-HOLLAND GmbH, and SAF-HOLLAND, Inc.

Repair Instruction

SAF-HOLLAND Group

Trailer Air Suspension Systems

Cast Beam Pivot Bolt Replacement Procedure

MAY 2014

Service repair kit SRK-710 has been supplied for the pivot bolt replacement. Each kit will do one axle and will include two (2) 93201070 pivot bolt, four (4) 93600553 outside washers, and two (2) 93400506 lock nut ***(Figure 2)***.

IMPORTANT: It is recommended that the trailer be unloaded before beginning service procedures.

1. On a level surface, support the front of the trailer with either a kingpin stand, landing gear, or coupled to a tractor.
2. Raise the trailer frame approximately 2" and support it with jack stands and remove wheel chocks.
3. At the suspensions specified ride height, place multiple jack stands under the vehicles frame per OEM specified locations, then lower the trailer frame onto the jack stands.

⚠WARNING Failure to properly support the trailer during service procedures could create a crush hazard which, if not avoided, could result in death or serious injury.

4. Exhaust all air from the suspensions air bags, set the parking brakes, and chock the wheels.
5. Raise the trailer axle approximately 2" and support it with jack stands and remove wheel chocks.

⚠WARNING Failure to properly support axle during a service procedure could create a crush hazard which, if not avoided, could result in death or serious injury.

6. Remove the tires.
7. On the roadside hangers, scribe or mark a line on the frame bracket outlining the position of the washers on both the inside and outside locations ***(Figure 1)***. These scribe marks will be used for ensuring previous alignment.
8. Starting on the curbside hangers, Remove 1-1/8" inch pivot bolt. (This is to be shipped back to SAF-HOLLAND®). Discard the old pivot nut and old washers.
9. Install new pivot hardware ***(Figure 2)***.

NOTE: On the roadside hangers while the connection is in a loose state, prior to final torque, ensure that the new washers are indexed back in place to where you made your scribe marks to ensure previous alignment.

Figure 1

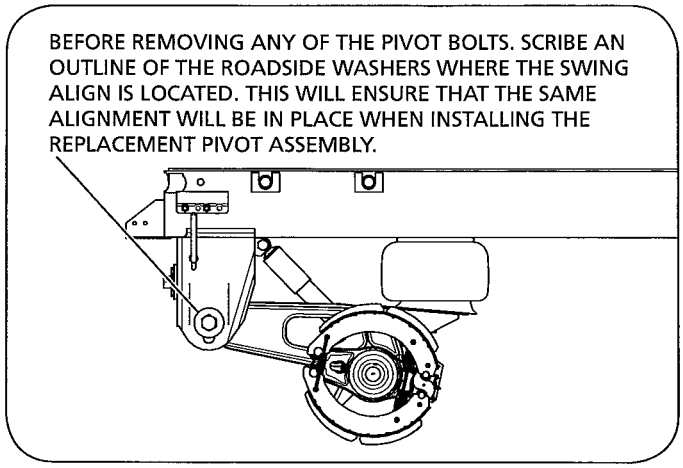

Figure 2

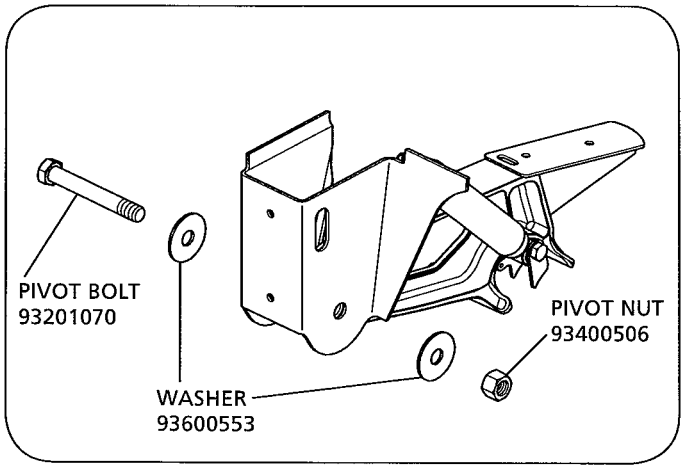

10. Torque the new pivot nut to a value of 550-600 ft.-lbs.
11. Clean the head of the bolt and add a white paint dot to indicate a change has been made.
12. Reinstall the tires.
13. Repeat this process for the pivot assembly hardware on the curbside of the suspension.
14. Lower the axle and tires onto the ground.
15. Repeat this procedure for the other suspensions affected.
16. Raise trailer approximately 2" and remove jack stands.
17. Air up the trailer suspension.

SAF HOLLAND USA, Inc. · 888.396.6501 · Fax 800.356.3929
SAF HOLLAND Canada Limited · 519.537.3494 · Fax 800.565.7753
Western Canada · 604.574.7491 · Fax 604.574.0244
www.safholland.us

SAF-HOLLAND ORIGINAL PARTS™

From fifth wheel rebuild kits to suspension bushing repair kits, SAF-HOLLAND Original Parts are the same quality components used in the original component assembly.

SAF-HOLLAND Original Parts are tested and designed to provide maximum performance and durability. Will-fits, look-alikes or, worse yet, counterfeit parts will only limit the performance potential and could possibly void SAF-HOLLAND's warranty. Always be sure to spec SAF-HOLLAND Original Parts when servicing your SAF-HOLLAND product.

SAF-HOLLAND USA • 888.396.6501 • Fax 800.356.3929
www.safholland.us

SAF-HOLLAND CANADA • 519.537.3494 • Fax 800.565.7753
WESTERN CANADA • 604.574.7491 • Fax 604.574.0244
www.safholland.ca

SAF-HOLLAND MEXICO • 52.55.5362.8743 • Fax 52.55.5362.8743
www.safholland.com.mx

info@safholland.com

SAF-HOLLAND USA, INC.
1950 Industrial Blvd., Muskegon, MI 49442
www.safholland.com

SAF-HOLLAND
Engineering Your Road to Success