SERVICE

SUZUKI Way of Life!

Automotive Division | **Technical Service Bulletin** | **May 19, 2014**
Restraints | **Bulletin No. TS 07 04284**

SUBJECT: **Safety Recall Campaign "VD";**
Front Passenger Side Bottom Seat Cushion Replacement

MODEL(S): **Grand Vitara (JB424, JB627, JB632)**

YEAR: **2006~2011**

VIN LIST: **For a quick reference to affected VINs and, a specific VIN associated Service Part part number, please click this link.**

VIN TO PART NUMBER REFERENCE LINK

If you are an authorized Suzuki Service Provider, clicking on the link above will open the VIN file that includes associated service part part numbers. When the file opens, find the VIN you are inquiring about by follow these steps:

Press the "Ctrl" and "F" keys simultaneously on your keyboard
➔ Enter the complete VIN Number you are searching for
➔ Press the "Enter" key.
The VIN and associated part number will appear.

Use Suzuki Connect "Vehicle Master Inquiry" to confirm vehicle eligibility for this recall.

If you have access to this bulletin but are not an authorized Suzuki Service Provider, please contact an authorized Suzuki Service Provider to confirm vehicle eligibility and schedule an appointment if the vehicle is eligible.

CONDITION: The Occupant Classification System (OCS) may develop an electrical circuit disconnection within the front passenger sensing system sensor mat that is built into the front passenger seat bottom cushion. The disconnection is due to repeated flexing of the sensor mat from use of the front passenger seat. If this condition occurs, the "AIR BAG" light in the instrument cluster and, the front passenger's seat belt reminder light will come on. Also, the "PASS AIR BAG OFF" indicator light will remain off because the front passenger air bag will remain enabled. In a frontal impact of significant magnitude, the front air bag will deploy with full force - even with a child, or small adult, in the front seat. Air bag deployment with a child or small adult in the front passenger seat increases the risk of severe injury or death to that occupant.

CAUSE: Suzuki has determined that an electrical circuit disconnection (OPEN) can develop within the Front Passenger Occupant Classification System (OCS) sensor mat that is built into the front passenger seat bottom cushion, due to repeated flexing of the mat from use of the seat.

CORRECTION: Authorized Suzuki Service Providers will replace the front passenger bottom seat cushion at no charge to the customer on affected vehicles.

This Recall Campaign ("VD") replaces Special Coverage Extension "ZA" (TS 06 05212R3).

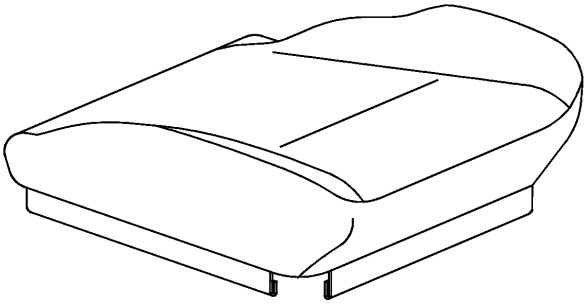

Trim Sub-Assembly

PARTS INFORMATION			
Qty.	**"VD" Trim Sub-Assembly**		**"ZA" Cushion Assembly (not to be used for "VD" unless "VD" parts become unavailable)**
1	**85107-65J00-BFG**		85101-65JQ*-BFG
1	**85107-65J00-DBS**		85101-65JQ*-DBS
1	**85107-65J10-BFK**		85101-65JS*-BFK
1	**85107-65J10-BFN**		85101-65JS*-BFN
1	**85107-80J00-BFK**		85101-65JR*-BFK
1	**85107-80J00-BFN**		85101-65JR*-BFN
1	**85107-80J10-BFK**		85101-65JU*-BFK
1	**85107-80J10-BFN**		85101-65JU*-BFN
1	**85107-80J00-DBS**		85101-65JR*-DBS
1	**85107-80J00-JVB**		85101-65JR*-JVB
1	**85107-80J00-JVE**		85101-65JR*-JVE
Click on the link provided under VIN LIST on page 1 of this TSB for a quick reference to affected VINs and a specific VIN's associated service part part number.			

WARRANTY CLAIM INFORMATION					
Labor Operation	**Description**	**Failed Part Number**	**Complaint Code**	**Defect Code**	**Labor Time**
Please refer to Campaign Bulletin SC-67R2 for claim submission Instructions.					

⚠ WARNING

The air bag(s) may deploy by reserve energy stored in the Sensing and Diagnostic Module (SDM). Performing service operations on or around air bag system components or wiring without de-activating the air bag system may result in accidental deployment of the air bag(s) and cause personal injury or death.

Deactivate the air bag system before performing service operations on or around air bag system components; Turn the ignition switch to the LOCK position and disconnect the negative battery cable. Wait at least 90 seconds before any service work begins.

Work Flow

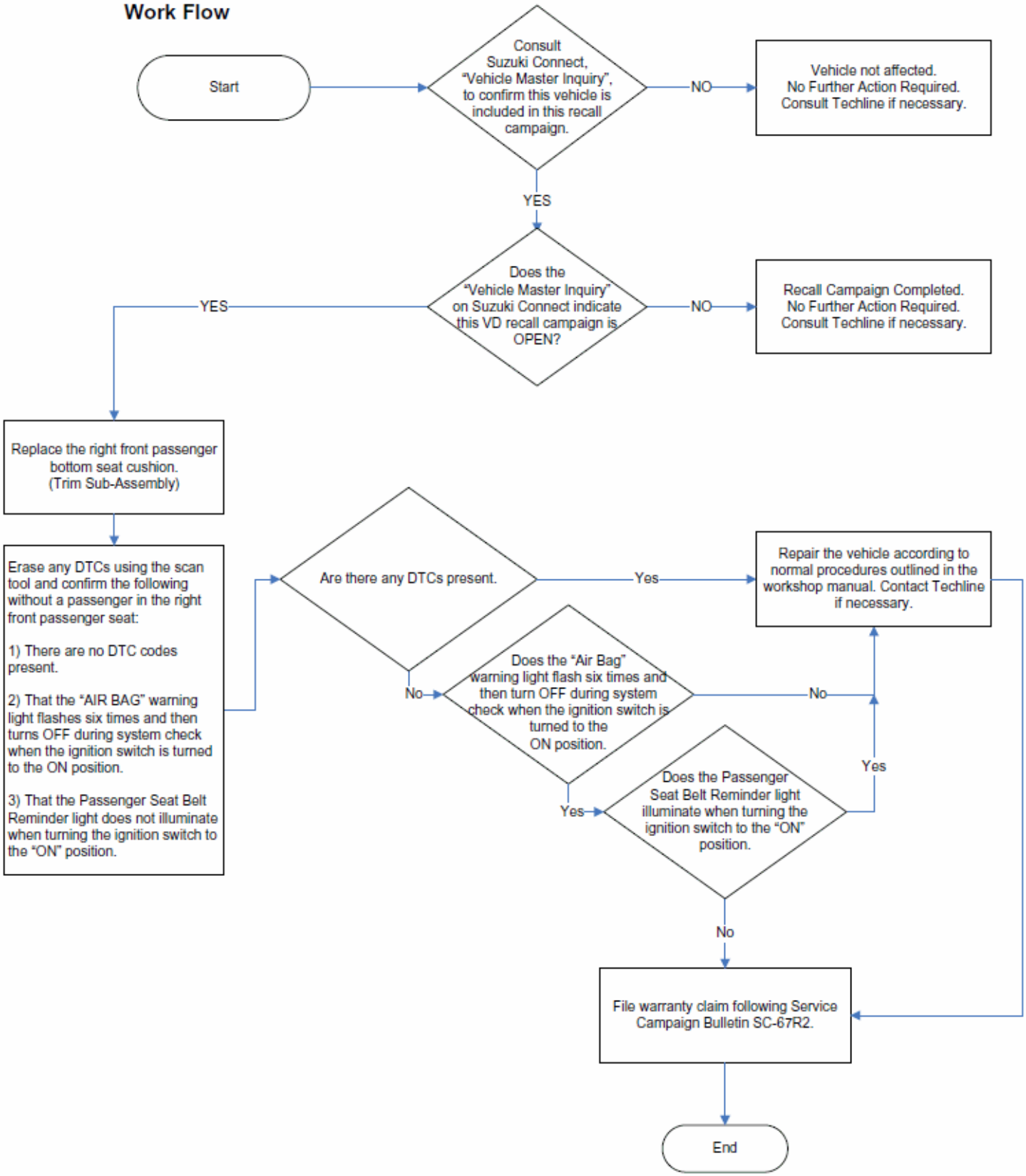
Start
Consult Suzuki Connect, "Vehicle Master Inquiry", to confirm this vehicle is included in this recall campaign.
NO
Vehicle not affected. No Further Action Required. Consult Techline if necessary.
YES
Does the "Vehicle Master Inquiry" on Suzuki Connect indicate this VD recall campaign is OPEN?
NO
Recall Campaign Completed. No Further Action Required. Consult Techline if necessary.
YES
Replace the right front passenger bottom seat cushion. (Trim Sub-Assembly)
Erase any DTCs using the scan tool and confirm the following without a passenger in the right front passenger seat:
1) There are no DTC codes present.
2) That the "AIR BAG" warning light flashes six times and then turns OFF during system check when the ignition switch is turned to the ON position.
3) That the Passenger Seat Belt Reminder light does not illuminate when turning the ignition switch to the "ON" position.
Are there any DTCs present.
Yes
Repair the vehicle according to normal procedures outlined in the workshop manual. Contact Techline if necessary.
No
Does the "Air Bag" warning light flash six times and then turn OFF during system check when the ignition switch is turned to the ON position.
No
Yes
Does the Passenger Seat Belt Reminder light illuminate when turning the ignition switch to the "ON" position.
Yes
No
File warranty claim following Service Campaign Bulletin SC-67R2.
End

NOTE:
The figures and pictures in this bulletin are representative only and will vary depending on model and specification. Refer to the appropriate service materials for detailed information for the vehicle being repaired.

Removal

NOTICE
Radios with an Anti-Theft Function enabled will become inoperable when battery power is removed. **Before beginning these service procedures, have the vehicle owner provide their Radio Anti-Theft Code to ensure continued radio operation.**

1. Record the radio presets then turn the ignition switch to the LOCK position and remove the key.

2. Disconnect the battery negative (-) cable and wait at least 90 seconds before proceeding.

3. Remove the four (2 front, 2 rear) seat track mounting bolts that secure the seat to the floor.

NOTICE
Once loose, the seat assembly may hit and damage trim and other vehicle components. **Protect components from direct contact with the seat assembly by using protective covering.**

4. Under the seat, locate the body and SRS harnesses that are feeding through from the carpet near the ventilation duct. Disconnect their connectors at the sub-harness bracket. Then remove the seat from the vehicle.

NOTE:
The figure provided here is for component location identification only. Be careful not to move the seat in such a way as to damage the harnesses.

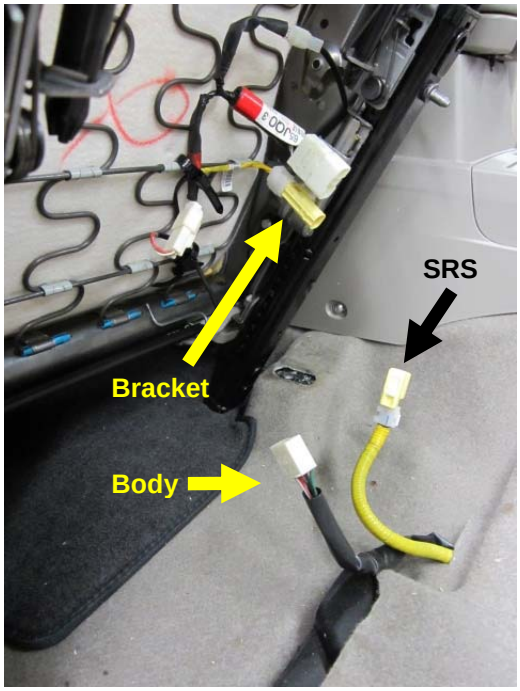

5. Remove the plastic handle from the seat retractor lever and then remove the right side plastic trim.
    a. Disengage the locking tab and remove the plastic handle from the seat retractor lever on the right side of the seat by sliding the lever cover from the lever.
    b. Remove the right side plastic trim. Note the fastening points “A”, “B” and “C”.

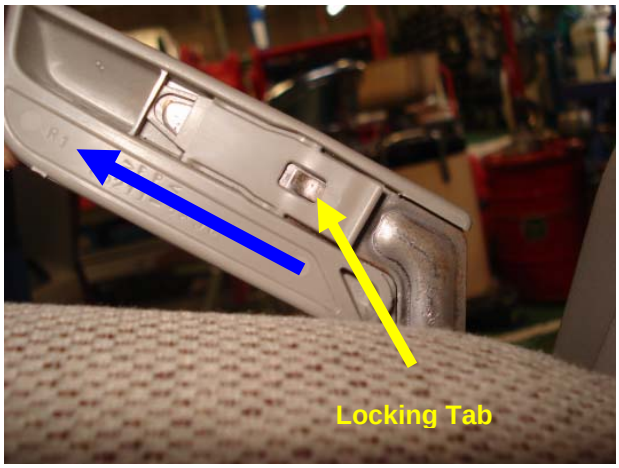

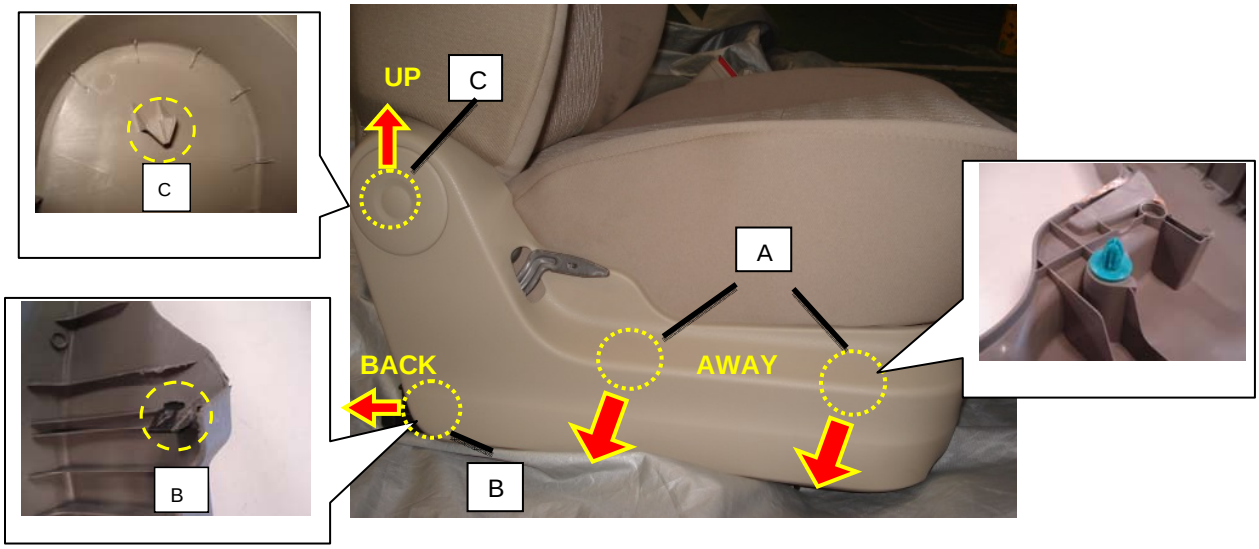

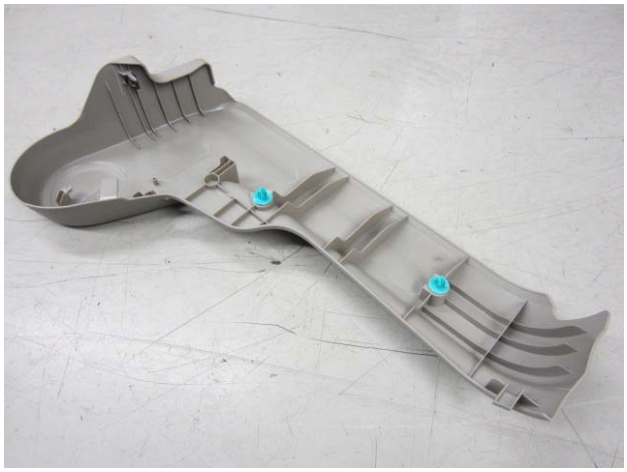

6. Position the seat for access to the seat bottom and before disconnecting any connectors or releasing the harness tie-straps, record the layout of each harness (OCS, side air bag, seat belt and heater if equipped) and mark the tie-strap locations at the seat cushion spring(s).

NOTICE
Harness layout and tie-strap locations vary depending on model and specification. **Always layout and fasten harnesses during installation in the same position as when removed to avoid electrical damage and possible side air bag deployment.**

7. Remove and set aside for reuse the tie-straps that fasten the harnesses to the seat cushion spring(s).

8. Disconnect the seat belt harness connector from the sub-harness.

9. Disconnect the OCS harness connector from the sub-harness.

10. Disconnect the seat heater harness connector (if equipped) from the sub-harness.

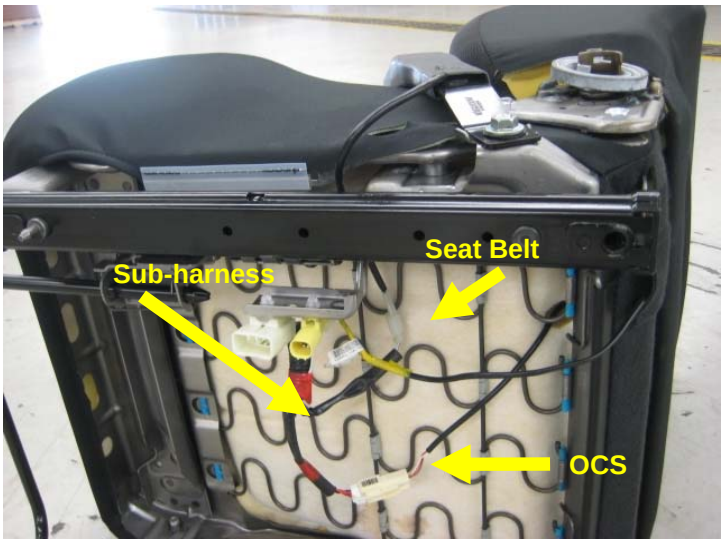

11. Disconnect the side air bag harness connector from the sub-harness bracket.

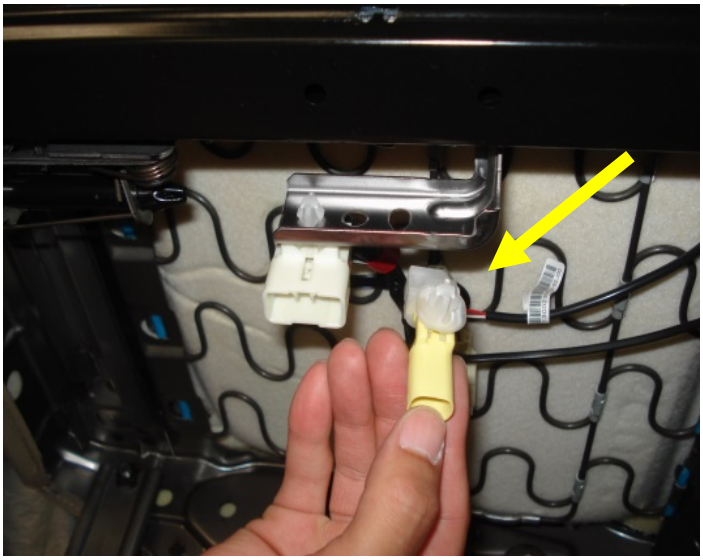

12. To help during reassembly, record the seat belt buckle wire harness layout at the harness locating tab of the left side plastic trim, and between the seat track and cushion.

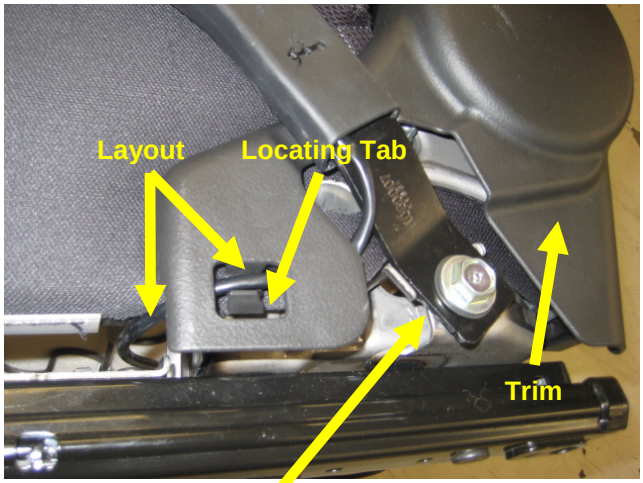

13. Remove the seat belt buckle and the left side plastic trim. Note the trim fastening points “A” and “B”.

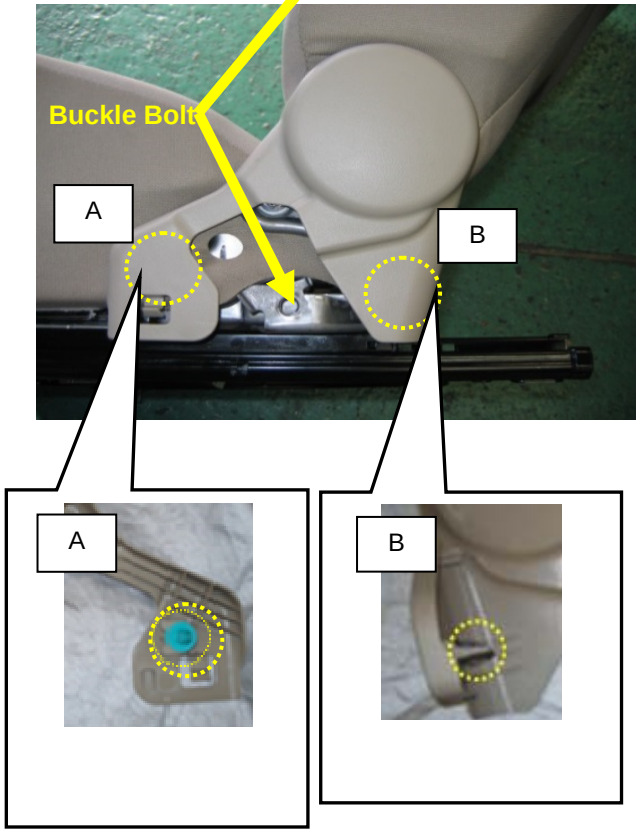

14. Record the position of the Velcro strap and the layout of the side air bag harness, then lift the strap to release the SRS harness from the lower seat cushion.

15. Remove the four bolts (2 on each side) holding the seat back assembly to the seat cushion assembly and separate the two assemblies from each other.

16. Release all four retaining strips of the seat bottom fabric/leather from the seat frame.

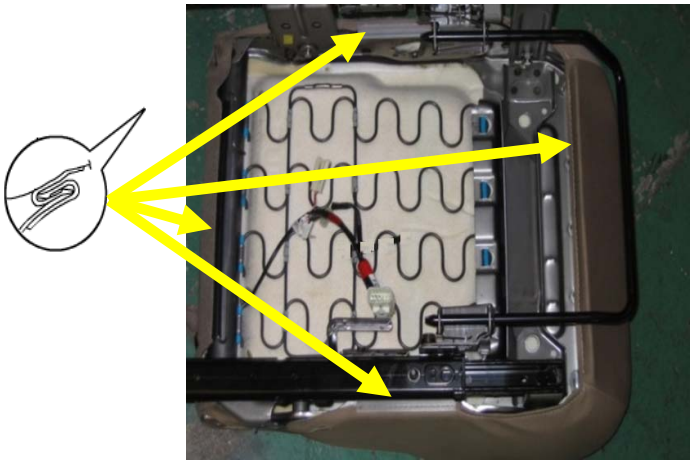

17. Release the trim sub-assembly from the two rear side cover fitting stays located on the rearward side of the seat frame.

18. Remove the trim sub-assembly from the seat frame.

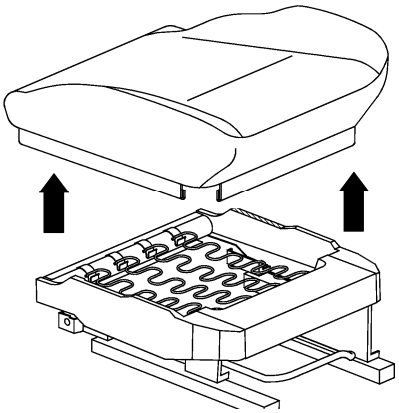

END OF REMOVAL PROCEDURE

INSTALLATION

NOTE:
The figures and pictures in this bulletin are representative only and will vary depending on model and specification. Refer to the appropriate service materials for detailed information for the vehicle being repaired.

1. Install a new trim sub-assembly to the seat frame.

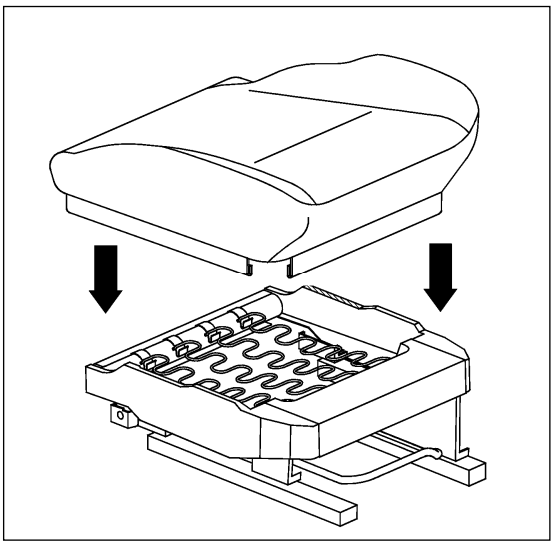

2. Fasten the trim sub-assembly at the two rear side cover fitting stays located on the rearward side of the seat frame.

3. Secure all four retaining strips of the seat bottom fabric/leather to the seat frame.

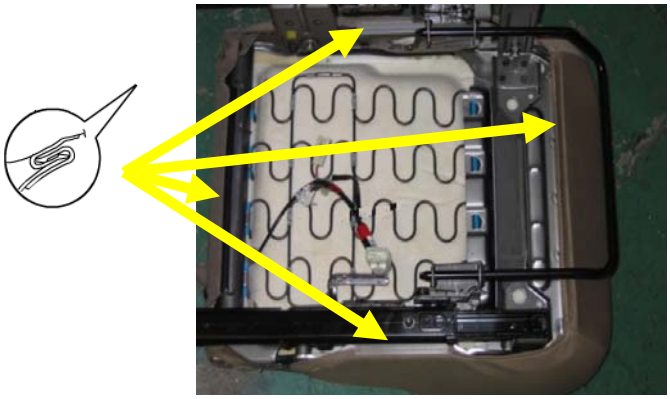

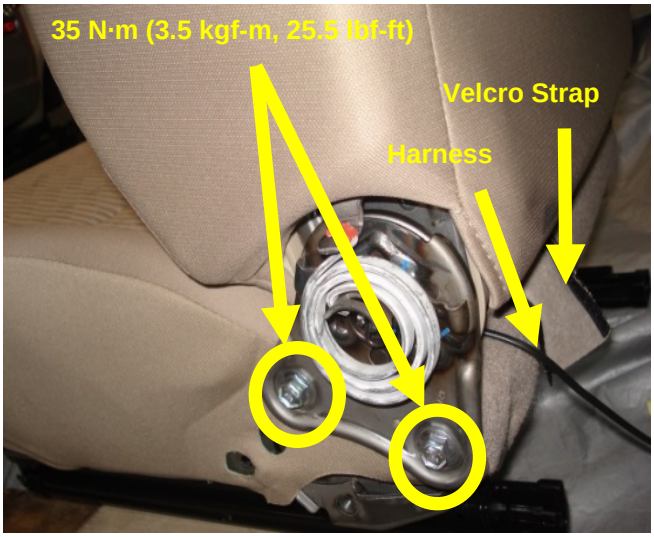

4. Install the four bolts (2 on each side) holding the seat back assembly to the seat cushion assembly.
   a. Torque: **35 N·m (3.5 kgf-m, 25.5 lbf-ft)**

5. Position the side air bag harness following its original layout and secure the Velcro strap.

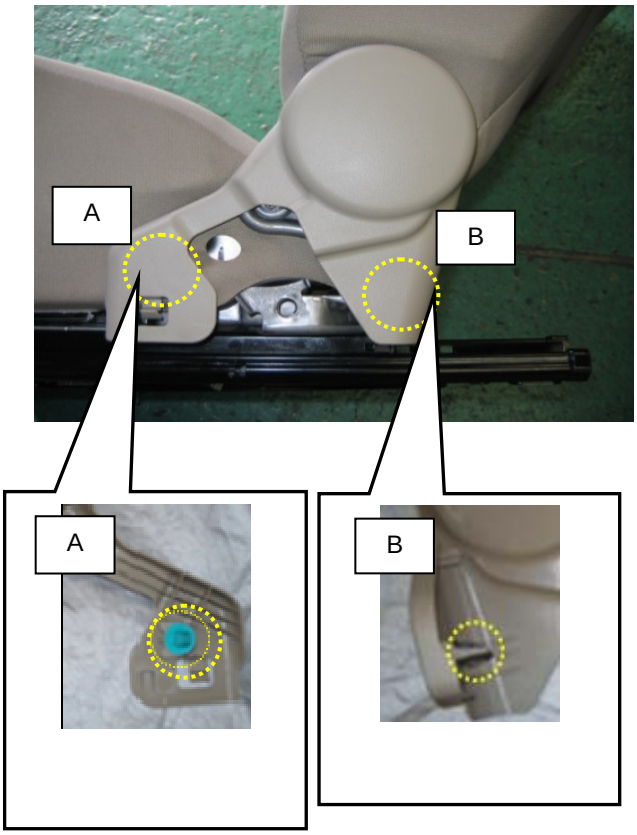

6. Install the left side plastic trim.

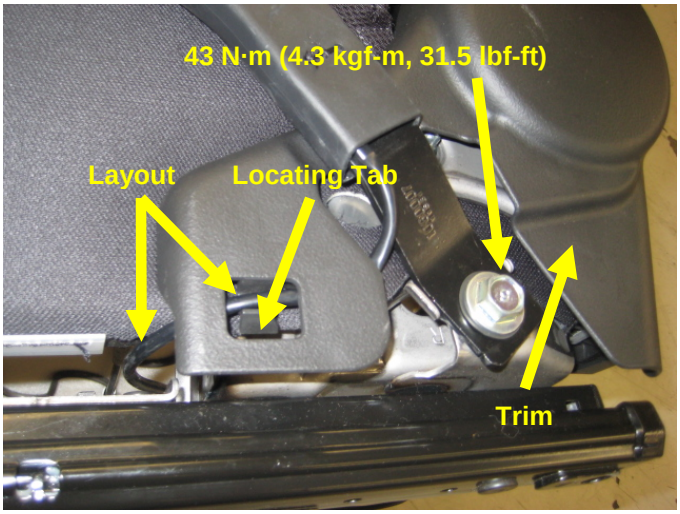

7. Install the seat belt buckle.
   a. Torque to **43 N·m (4.3 kgf-m, 31.5 lbf-ft)**

8. Position the seat belt buckle wire harness following its original layout.

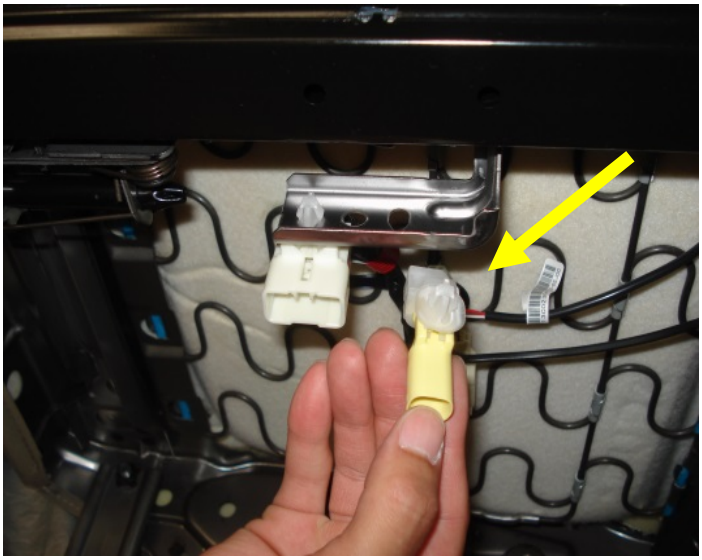

9. Connect the side air bag harness connector to the sub-harness bracket.

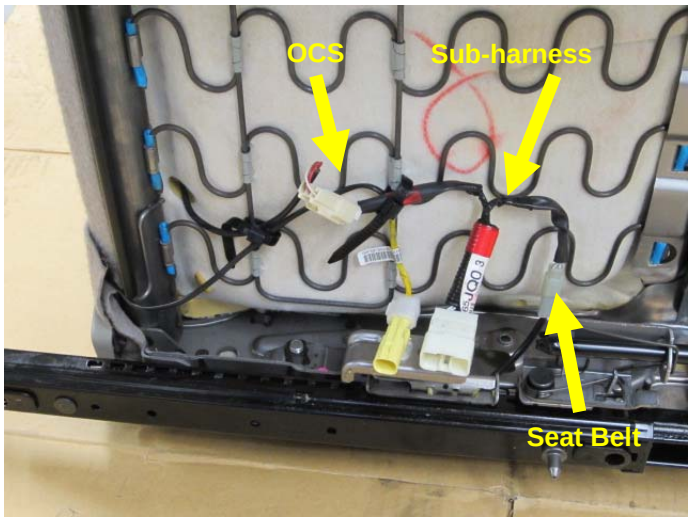

10. Position the seat heater harness (if equipped) following its original layout and connect the connector at the sub-harness.

11. Position the OCS harness following its original layout and connect the connector to the sub-harness.

12. Position the seat belt harness following its original layout and connect the connector to the sub-harness.

13. Install the tie-straps to their original location(s) on the seat cushion spring(s) and secure the harnesses following their original layout.

14. Install the right side plastic trim.

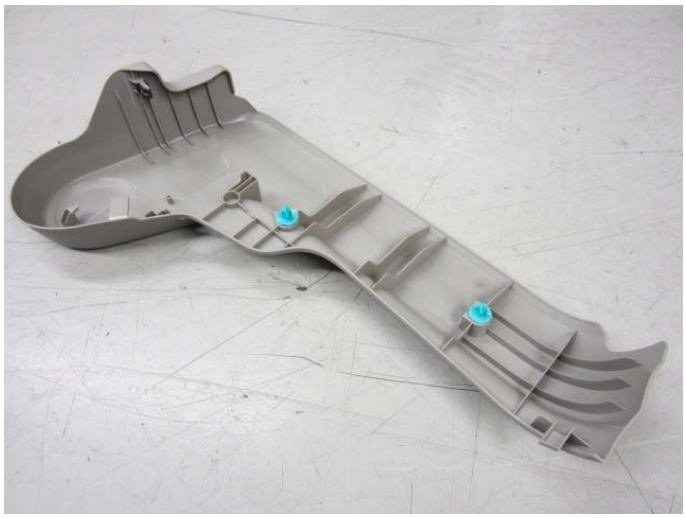

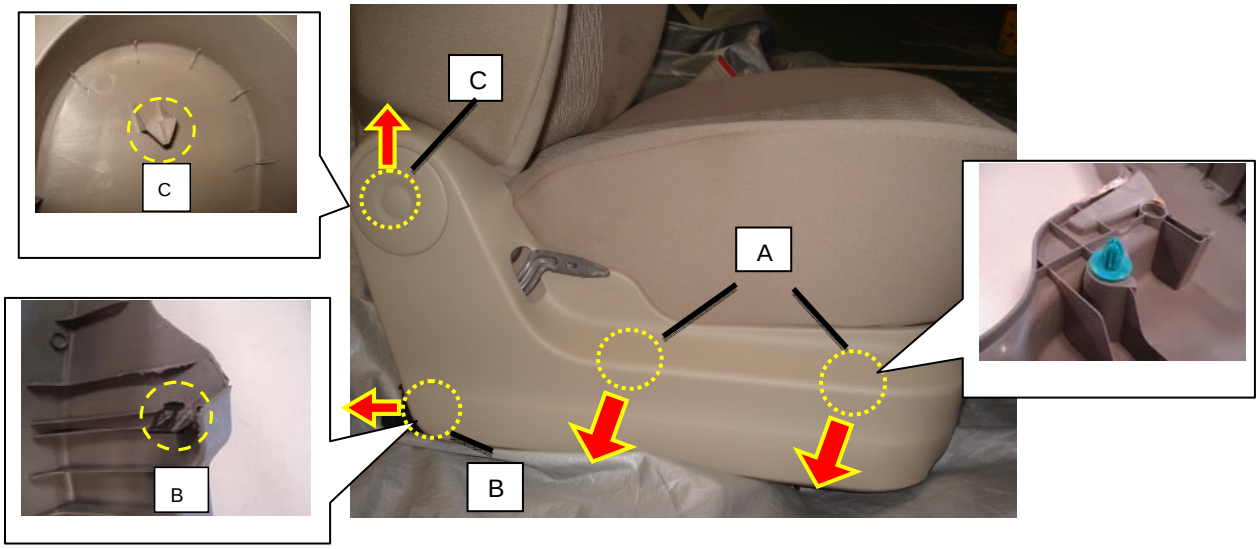

15. Install the plastic handle to the seat retractor lever.

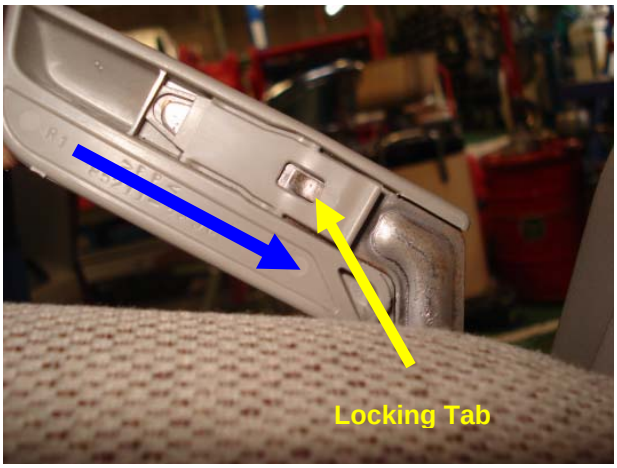

16. Set the seat in the vehicle and connect the body and SRS harness connectors to their connections at the sub-harness bracket.

NOTE:
The figure provided here is for component location identification only. Be careful not to move the seat in such a way as to damage the harnesses.

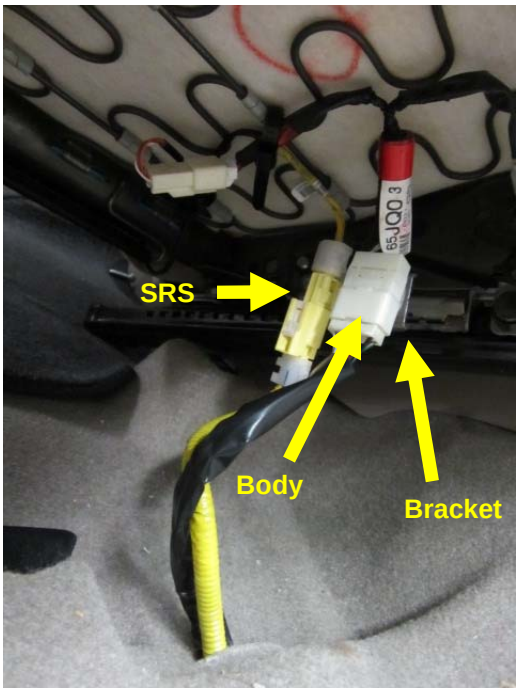

NOTICE
When loose, the seat assembly may hit and damage trim and other vehicle components. **Protect components from direct contact with the seat assembly by using protective covering.**

17. Install the four (2 front, 2 rear) seat track mounting bolts that secure the seat to the floor
    a. Torque: **23 N·m (2.3 kgf-m, 17.0 lbf-ft)**

18. Move the passenger seat completely back and forth to check that the seat moves smoothly and unobstructed.

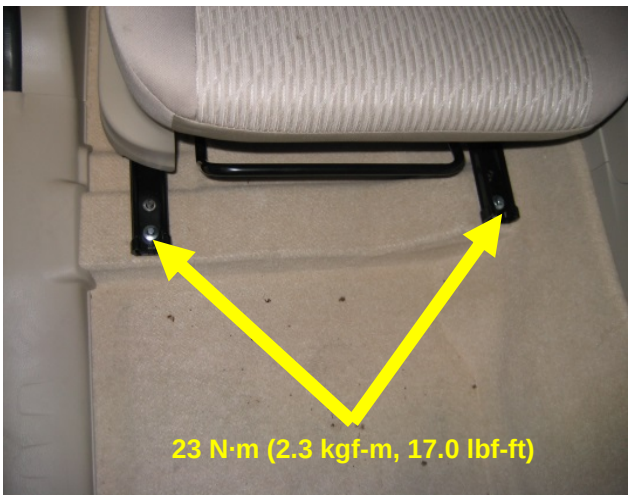

19. Connect the battery negative (-) cable and enter the vehicle owner's radio presets previously recorded.

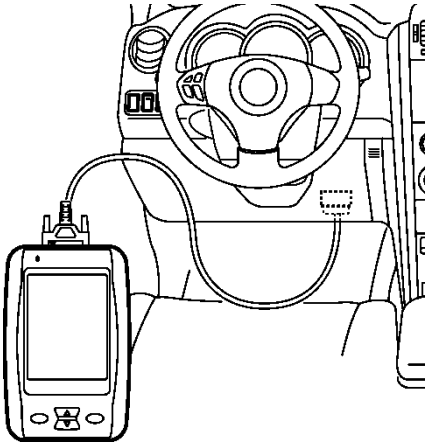

20. Without a passenger in the right front passenger seat, connect the SDT to the Data Link Connector (DLC) and clear all DTC codes. Confirm the following:

    a) There are no DTC codes present.

    b) That the "AIR BAG" warning light flashes six times and then turns OFF during system check when the ignition switch is turned to the ON position.

    c) That the Passenger Seat Belt Reminder light does not illuminate when turning the ignition switch to the "ON" position.

21. If all the conditions listed in step 20 are not met, repair the vehicle according to normal procedures outlined in the workshop manual. Contact Techline if necessary.

22. File a warranty claim following Service Campaign SC-67R2.

END OF INSTALLATION PROCEDURE

Affected Departments:
The following departments in your dealership should be notified of this information:

☑ Management ☑ Service ☑ Warranty ☑ Sales ☑ Parts ☐ Accessories

Suzuki bulletins are intended for use by professional technicians, NOT a "do-it-yourselfer." They are written to inform these technicians of conditions that may occur on some vehicles, or to provide information that could assist in the proper service of a vehicle. Properly trained technicians have the equipment, tools, safety instructions, and know-how to do a job properly and safely. If a condition is described, DO NOT assume that the bulletin applies to your vehicle, or that your vehicle will have that condition. See your authorized Suzuki Service Provider for information on whether your vehicle may benefit from the information. Suzuki reserves the right to change technical specifications at any time without prior notice.