Bulletin No.: 13112A
Date: November 2013

Recall Bulletin

PRODUCT SAFETY RECALL

SUBJECT: **Front Passenger Air Bag Inflator**

MODELS: **2003-2004 Pontiac Vibe**

This bulletin has been revised to provide a modified service procedure and additional information about the special tools needed to perform the required repair. Please discard all copies of bulletin 13112. Most of the tools were shipped to select dealers on November 16, 2013 with the balance being shipped on November 25, 2013. Dealers were selected based on their prior designation as a Pontiac Service Center and/or if an involved vehicle was assigned to their location. In order to ensure tool availability and support the timely completion of this safety recall, we are implementing the following changes:

- **Provide a list of the dealers that are being shipped the special tools so they can be shared as needed among local dealers.**
- **Provide each GM Regional Office with the special tools so a dealer can borrow them if the tools are not available from another dealer.**
- **Provide a list of the suspect air bag module serial numbers so dealers can visually identify modules that require replacement without using the bar code scanner. If a defective module is identified, dealers are still required to use the air bag mounting bracket to perform the service procedure.**
- **Modify the service procedure to describe how to perform the visual inspection and determine the pass / fail status of a suspect air bag module.**

The Pontiac Vibe was manufactured by New United Motor Manufacturing, Inc. (NUMMI), a joint venture between Toyota and GM.

CONDITION

Toyota has decided that a defect, which relates to motor vehicle safety, exists in certain 2003 and 2004 model year Pontiac Vibe vehicles. As a result, GM is conducting a safety recall. Some of these vehicles have a condition in which the front passenger air bag inflator could have been assembled with improperly manufactured propellant wafers. Improperly manufactured propellant wafers could cause the inflator to rupture and the front passenger air bag to deploy abnormally in the event of a crash, increasing the risk of injury to the occupant.

Copyright 2013 General Motors. All Rights Reserved.

CORRECTION

Dealers are to inspect the vehicle and, if necessary replace the front passenger air bag inflator.

VEHICLES INVOLVED

All involved vehicles are identified by Vehicle Identification Number on the Investigate Vehicle History screen in GM Global Warranty Management system. Dealership service personnel should always check this site to confirm vehicle involvement prior to beginning any required inspections and/or repairs. It is important to routinely use this tool to verify eligibility because not all similar vehicles may be involved regardless of description or option content.

For dealers with involved vehicles, a listing with involved vehicles containing the complete vehicle identification number, customer name, and address information has been prepared and will be provided to US and Canadian dealers through the GM GlobalConnect Recall Reports. Dealers will not have a report available if they have no involved vehicles currently assigned.

The listing may contain customer names and addresses obtained from Motor Vehicle Registration Records. The use of such motor vehicle registration data for any purpose other than follow-up necessary to complete this recall is a violation of law in several states/provinces/countries. Accordingly, you are urged to limit the use of this report to the follow-up necessary to complete this recall.

PART INFORMATION

Parts required to complete this recall are to be obtained from General Motors Customer Care and Aftersales (GMCC&A). Please refer to your “involved vehicles listing” before ordering parts. Normal orders should be placed on a DRO = Daily Replenishment Order. In an emergency situation, parts should be ordered on a CSO = Customer Special Order.

Note: It is anticipated that only about 10% of the involved vehicles will require air bag module replacement and dealers are encouraged to order replacement parts accordingly.

Part Number	Description	Quantity/Vehicle
19205568	INFLATOR ASM, I/P MDL AIR BAG *	1 (As Req’d.)

* All Dealers: Do not discard or destroy the box containing the new passenger air bag inflator, it will be needed to return the used inflator. The box contains special instructions for the packaging and shipment of the used inflator. The instructions must be followed without exception. DO NOT DEPLOY ANY INFLATOR.

  U.S. Dealers: Refer to pages 1-2 of the instructions included with the new inflator. The used inflator must be returned within 2 business days of its removal from an involved vehicle. The person packing and shipping the used inflator must have received hazardous material training as per section 1.7.4.1 of the GM Service Policies and Procedures Manual and the training records must be on file at your dealership.

  Canada Dealers: Refer to pages 3-4 of the instructions included with the new inflator. Contact Crane Worldwide to pick up the used inflator within 2 business days of its removal from an involved vehicle.

SPECIAL TOOLS

An air bag mounting bracket and bar code scanner, EL-51377 and EL51378, respectively, are being shipped to select dealers. Dealers were selected based on their prior designation as a Pontiac Service Center and/or if an involved vehicle was assigned to their location. Most of the tools were shipped on November 16, 2013 with the balance being shipped on November 25, 2013. The tools are being furnished at no charge.

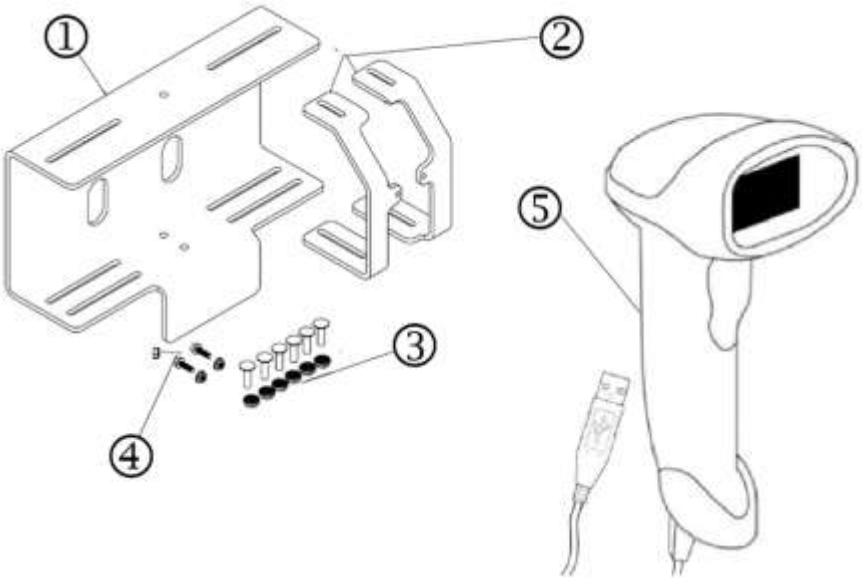

3607811

(1) Mounting Bracket (2) Support Bars (3) Support Bar Hardware (4) Air bag Mounting Hardware (5) Barcode Scanner

SERVICE PROCEDURE

Note: If a barcode scanner is not available, a technician can visually inspect the air bag serial number which is directly below the bar code to determine the pass / fail status of a suspect air bag module. See the illustration proceeding step 7 for serial number location. A list of the suspect air bag module serial numbers is available in the GM GlobalConnect Library. Perform steps 1-8 to view the air bag serial number.

- If the air bag serial number is not on the list, no further action is required. Re-install the air bag module. Refer to *Air Bag Instrument Panel Module Replacement* in SI. Proceed to step 25.
- If the air bag serial number is on the list, the air bag module must be replaced and dealers are REQUIRED to use the air bag mounting bracket to perform the replacement procedure. Do NOT perform steps 9-10. Proceed to *Safety Precautions* and *Passenger Air Bag Inflator Module Replacement* in this bulletin.
- If your dealership does not have the air bag mounting bracket, provide courtesy transportation to the customer until an air bag mounting bracket is obtained and the required repair is completed.
- A list of the dealers that were shipped the special tools is available in the GM GlobalConnect Library. Check this list to identify a dealer in your area that has the tools and request to borrow the air bag mounting bracket. You're GM District Manager – Aftersales can also assist with obtaining the air bag mounting bracket if the tool is not locally available from another dealer.

Passenger Air bag Inspection

Note: All involved vehicles are identified by Vehicle Identification Number on the Investigate Vehicle History screen in the GM Global Warranty Management system. Dealership service personnel should always check this site to confirm vehicle involvement prior to beginning any required inspections and/or repairs. It is important to routinely use this tool to verify eligibility because not all similar vehicles may be involved regardless of description or option content.

1. Verify vehicle eligibility using the GM Global Warranty Management system.
   - If the vehicle is involved, proceed to step 2.
   - If the vehicle is NOT involved, no further action is required.

Note: This field action bulletin provides service repair and labor time information for replacing the passenger side air bag inflator module. Other repairs, if required, are to be billed under warranty, goodwill assistance or customer pay.

2. Connect the scan tool and determine if any diagnostic trouble codes (DTCs) have been set. Record set DTCs, if present, on the job card.
3. Remove the instrument panel (I/P) compartment. Refer to *Instrument Panel Compartment Replacement* in SI.
4. Disconnect cable from negative battery terminal. Refer to *Battery Negative Cable Disconnection and Connection* in SI.

Danger: Wait at least 90 seconds after disconnecting the cable from the negative battery terminal to prevent air bag and seat belt pretensioner deployment.

Caution: Avoid scratching or damaging the dashboard assembly. Place protective tape on the dashboard if needed.

5. Remove the instrument panel passenger air bag assembly. Refer to *Air bag Instrument Panel Module Replacement* in SI.
6. Place the air bag module on a clean work bench.

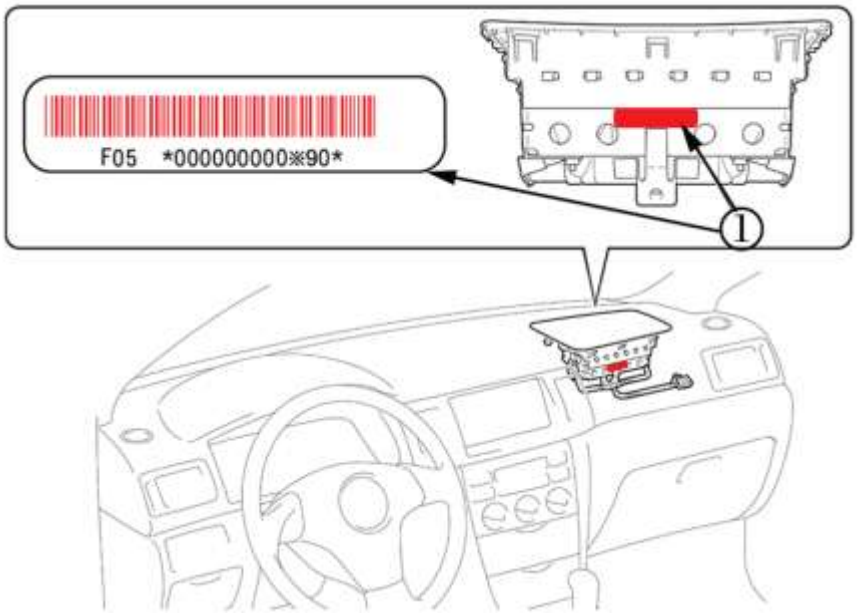

3470289

7. Locate passenger air bag barcode label (1). Refer to illustration.

8. Determine if an ‘X’ is present on the barcode label. The ‘X’, if present, will be located in the lower right-hand corner of the bar code label.
    - If an ‘X’ is NOT present, proceed to step 9.
    - If an ‘X is present, the air bag module has already been repaired. Re-install the air bag module. Refer to *Air bag Instrument Panel Module Replacement* in SI. Proceed to step 25.

Note: Download the scanner software application onto a computer BEFORE attempting to scan the barcode label. The scanner software application is available on TIS2WEB. Follow the scanner software application downloading instructions below. Perform the bullet points in the order presented below.

- From the TIS2WEB home page, click the Help ‘?’ icon in the upper right-hand side of the home page.
- Select *Vibe Programming Applications, Recall Information and Calibrations* from the Help screen.
- Select *Vibe Recall Information* from the Help screen.
- Download the application for the Vibe Recall onto the desktop of your computer.
- Unzip the file folder on your computer desktop. The barcode scanner software application will open a scanning session from your computer desktop. The barcode scanner software application will launch the ‘Ready’ screen when the program is ready to use.
- Connect the scanner cable into the USB port of the computer and proceed to step 9 in this bulletin.

9. Scan the barcode label on the air bag case.
10. View the scan tool screen to determine if replacement of the passenger air bag inflator is required.

3470495

- If the scan tool result screen indicates the passenger air bag inflator requires replacement, proceed to *Safety Precautions* and *Passenger Air bag Inflator Module Replacement* in this bulletin.

3470445

- If the scan tool result screen indicates the passenger air bag inflator does NOT require replacement, re-install the air bag module and install the instrument panel (I/P) compartment. Refer to *Instrument Panel Compartment Replacement* in SI. No further action is required.

Safety Precautions

Warning: If an air bag system is not handled using proper procedures and methods, it may be activated accidentally during work resulting in a life-threatening serious accident. If the service procedure is NOT performed correctly, the system may fail to activate when needed. Be sure to perform the proper work safely and according to the instructions in this service procedure.

1. **Eliminate Static Electricity.** Before start of work, touch a metallic portion of the vehicle with a bare hand to discharge static electricity charged on your body.
2. **DO NOT Measure Resistance**. DO NOT measure resistance of air bag components. Measuring current of a circuit tester may cause accidental activation.
3. **Handle The Air Bag Properly.** If an inflator is dropped, replace it with a **NEW** inflator.
4. **DO NOT Allow Foreign Objects Near Air bag.** Collect and account for all removed nuts/bolts to prevent them from landing in the air bag assembly. Any foreign objects in the air bag assembly may cause damage or injury if the air bag is activated.
5. **Wear Protective Equipment.** Always wear appropriate protective equipment when working on the air bag.

Passenger Air bag Inflator Module Replacement

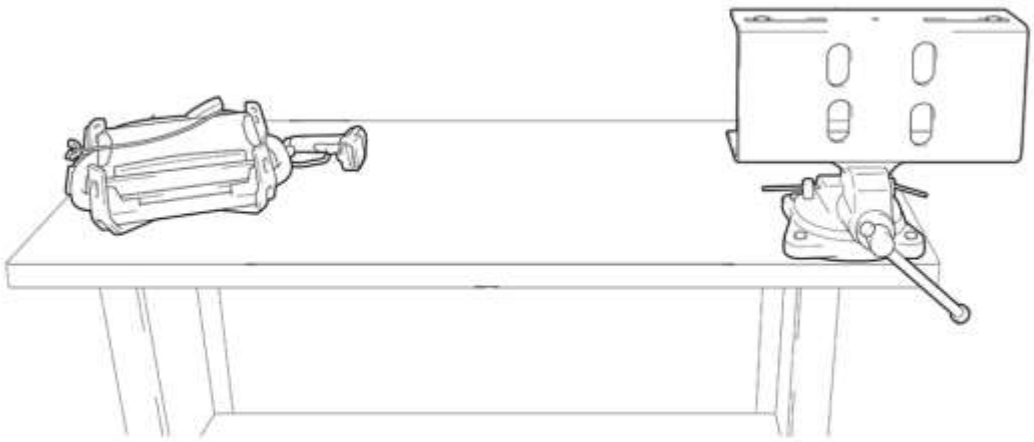

3607819

Danger: To avoid personal injury or death, it is critical to use an air bag module bracket when replacing an inflator module. Carefully read and follow the instructions below:

- Confirm the bracket assembly is installed securely in the vice.
- Confirm there are no loose objects or people exposed to the back side of the bracket for safety in the unlikely event of air bag deployment due to improper work procedures. The air bag is NOT being replaced due to an inadvertent deployment concern.
- Confirm that no objects, tools or people are within 3 feet (1 meter) of the back side of the bracket.
- Confirm that no objects, tools or people are within 2 feet (0.6 meters) of the sides of the bracket.
- BEFORE starting work and periodically while working on the air bag module, touch a metallic part of the work bench to discharge static electricity in the body.

1. Mount the air bag module bracket securely in a vice.

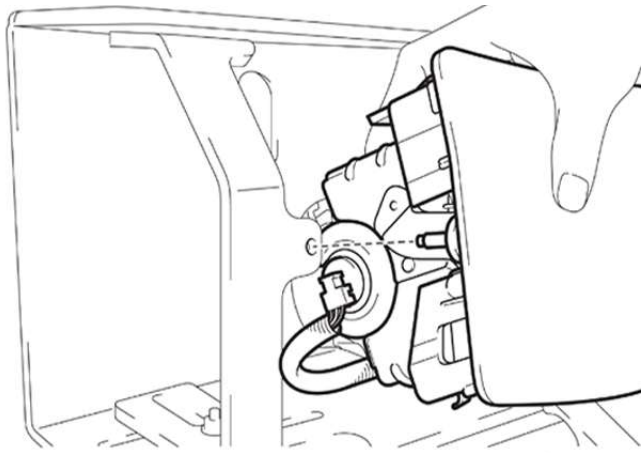

3607829

2. Position the two mounting studs on the air bag assembly into the holes on the bracket support bars.

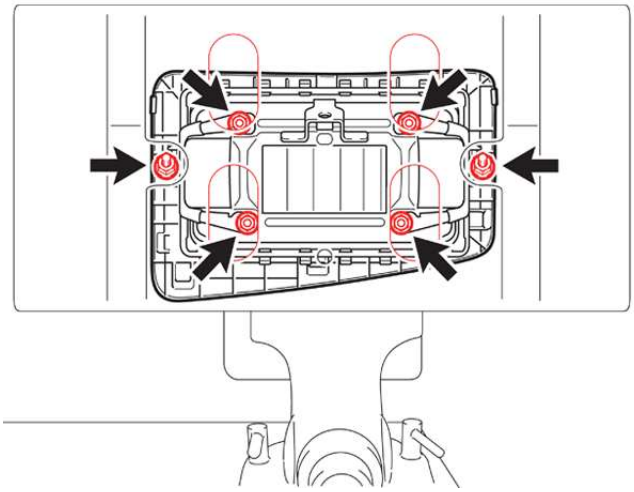

3607904

3. Loosely install the air bag to the support bars with the nuts supplied in the bracket kt.
4. Position the air bag so that all four stopper plate nuts can be removed through the access holes.
5. Tighten the two nuts holding the air bag to the support bars.
6. Confirm the following steps have been completed BEFORE proceeding to the next step:
    - The mounting bracket is secure in the vise.
    - The air bag module is secured to the support bars of the bracket.
    - The support bars are secured on the mounting bracket using one (1) bolt/nut at the top of each support bar and two (2) nuts/bolts at the bottom of each support bar.

3607909

Danger: To avoid personal injury, *ALWAYS* keep as much of your body as possible in front of the bracket when working on the air bag assembly. Remember to periodically touch a metallic part of the vehicle or work bench to discharge static electricity in the body.

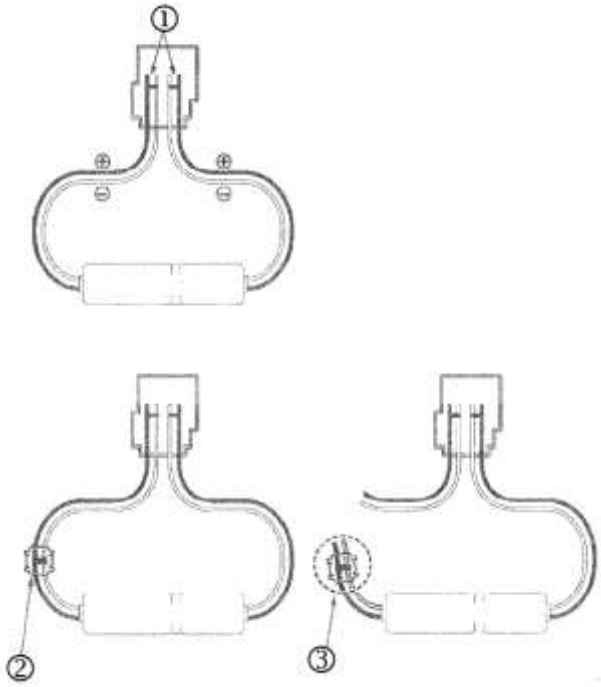

3470510

Note: The connector of an air bag inflator has a short-circuiting mechanism that eliminates voltage difference when disconnected (1). To allow for the replacement of the inflator module, a new short circuit using and electro tap (2) MUST be created BEFORE cutting the wires (3) and removing the inflator.

7. Create a short circuit before disconnecting the inflator wire harness.

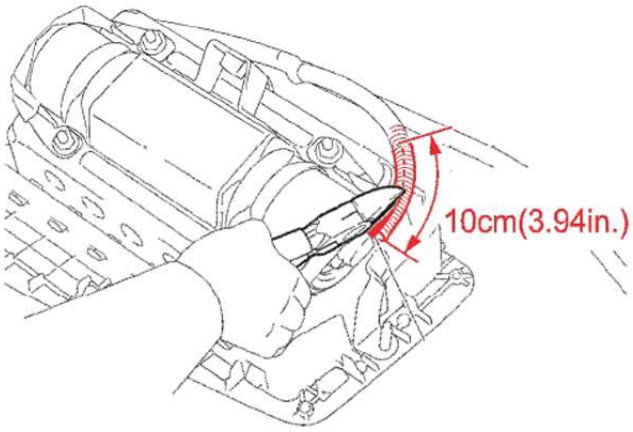

3470432

Caution: DO NOT damage the internal wires when cutting open the corrugate tube. DO NOT use a knife or razor blade to cut the tube to avoid damaging the wires. This step may be performed on either end if the inflator.

7.1 Cut open the corrugated tube on the yellow harness approximately 10 cm (4 in) using snipers.

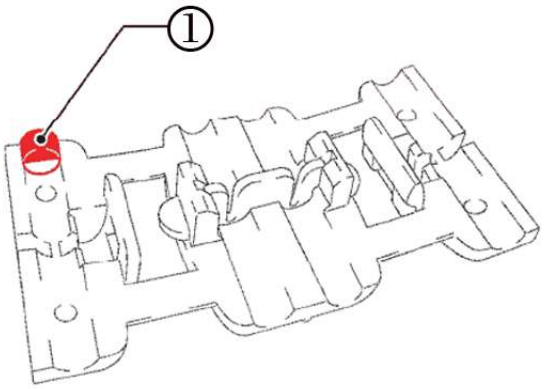

3470344

Danger: The tab on the electro tap must be removed to ensure a good short.

7.2 Cut off the tab of the electro tap (1) (included in the kit) shown in the illustration.

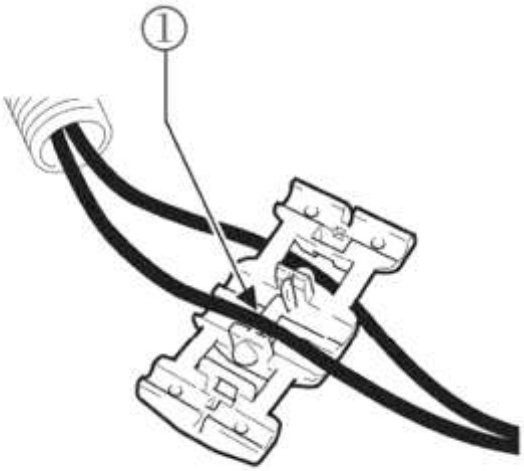

3470361

7.3 Short-circuit the two wires using the electro tap. Place one wire (1) in the electro tap as shown in the illustration.

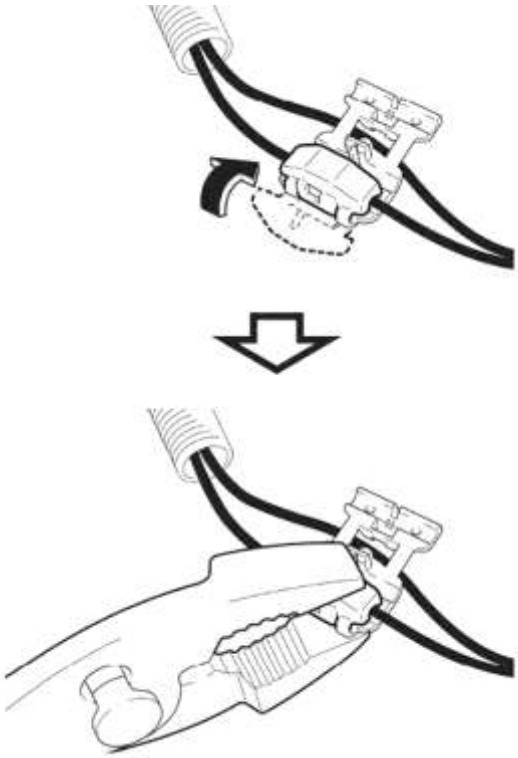

3470357

Note: Simultaneously working on the two wires tends to cause a mistake. Be sure to set the wire in the electro tap one wire at a time. Lock the electro tap firmly using pliers. If locked by hand, the electro tap may unfasten.

7.4 Fold and pinch the half of the electro tap where the first wire was just placed using pliers to lock firmly.

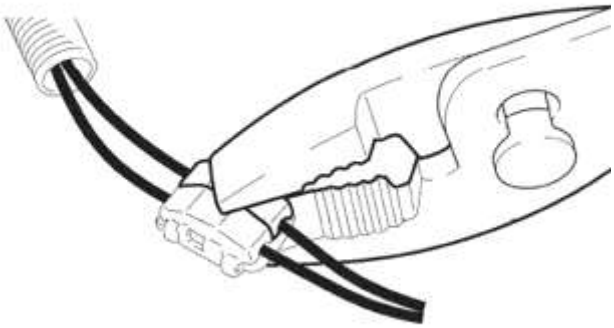

3470369

7.5 Set the other wire in the electro tap and lock in a similar way with pliers.

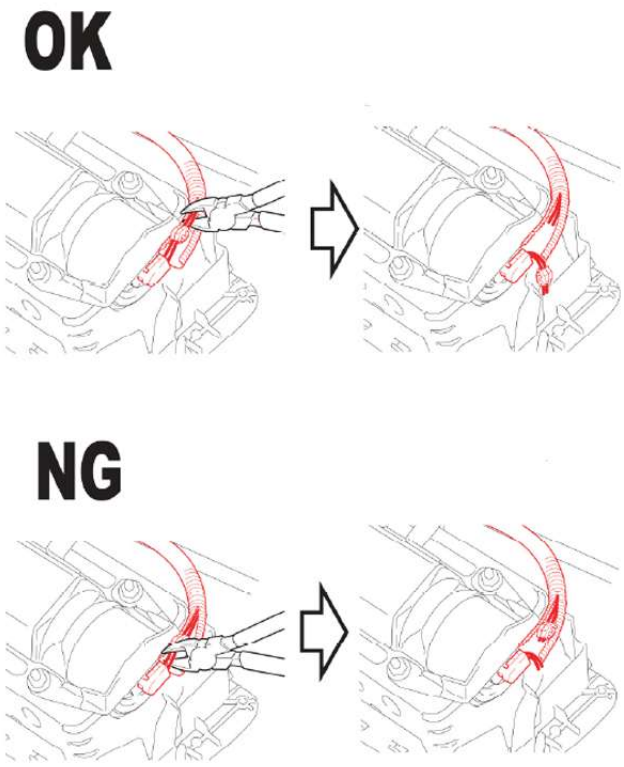

3470348

OK: Cut wires at opposite side to inflator. NG: Do NOT cut at inflator side.

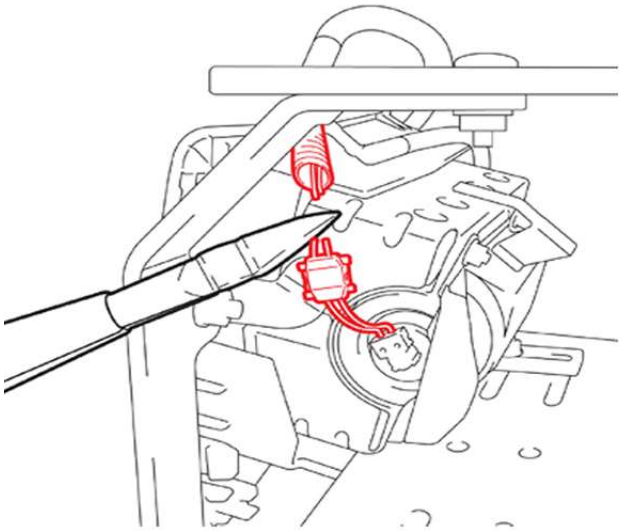

3607837

Danger: Do NOT measure resistance of the inflator wires. This may cause accidental activation of the inflator.

Caution: Ensure to cut the two wires at the correct location. Refer to the illustration.

8. Cut the two wires at the side of the electro tap opposite to the inflator (the side of the electro tap that is farthest away from the inflator).

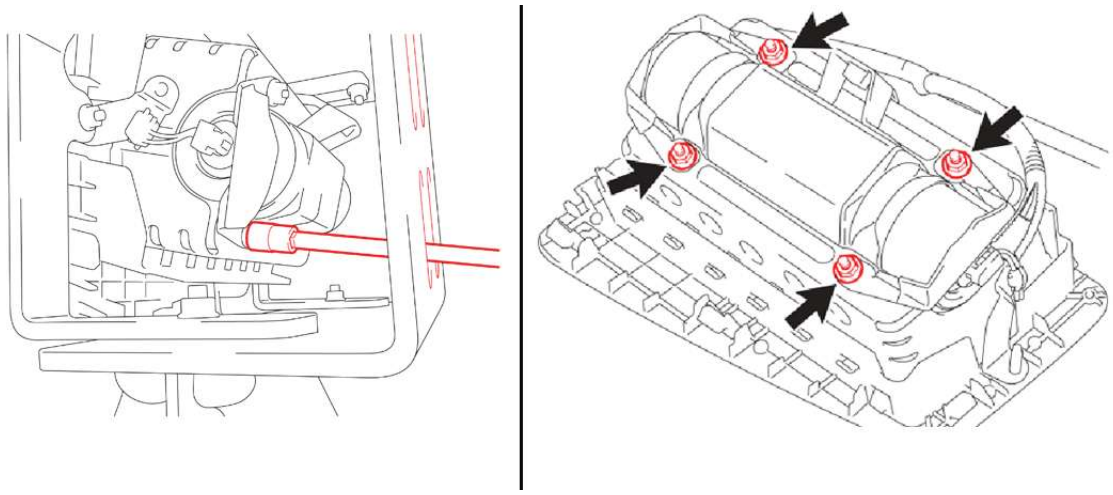

3607844

Caution: DO NOT use power tools. The bracket support bars may need to be repositioned to remove the nuts through the access holes.

9. Use the access holes in the bracket to loosen and remove the four self-locking nuts.

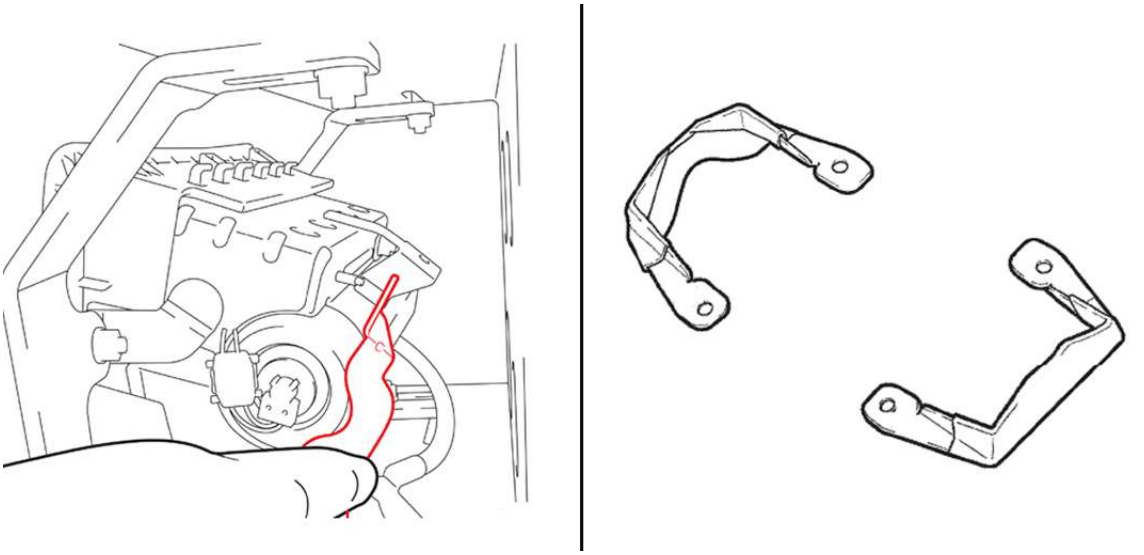

3607850

10. Remove the stopper plates.
11. Discard the 4 nuts and 2 stopper plates as they are not to be reused.
12. Remove the inflator.

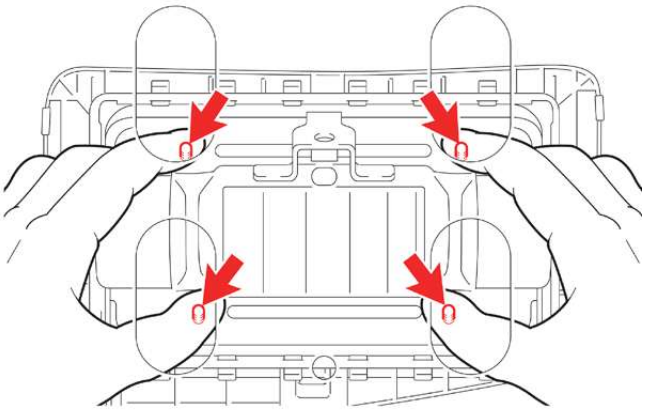

3607857

12.1 Gently push in the 4 studs to loosen the inflator for removal.

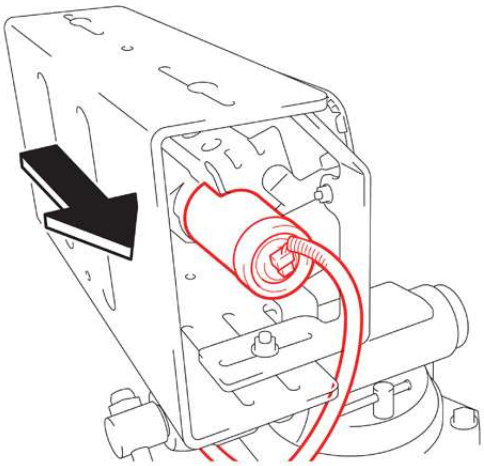

3607866

12.2 Remove the inflator from the air bag assembly and place it on a safe work surface.

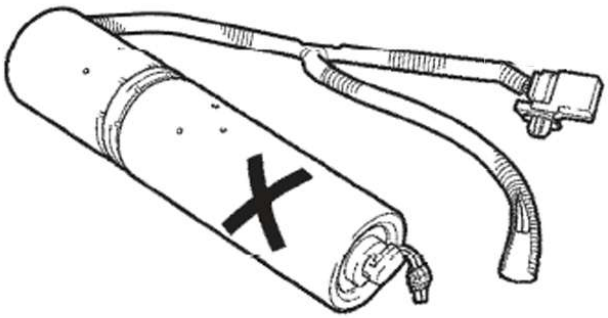

3470416

12.3 Put a mark on the removed inflator and store it in the provided replacement part box. Refer to the packaging instructions that were included with the new inflator module kit.

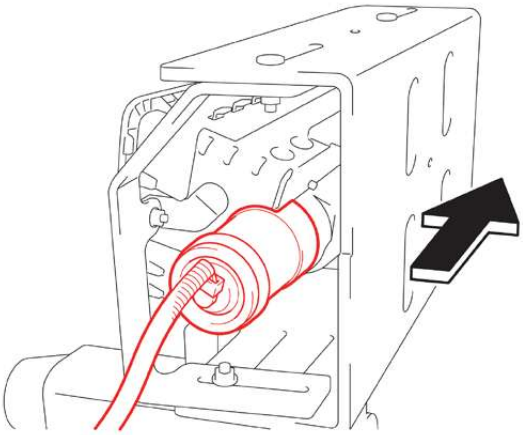

3607873

13. Carefully slide the new inflator into the air bag assembly.

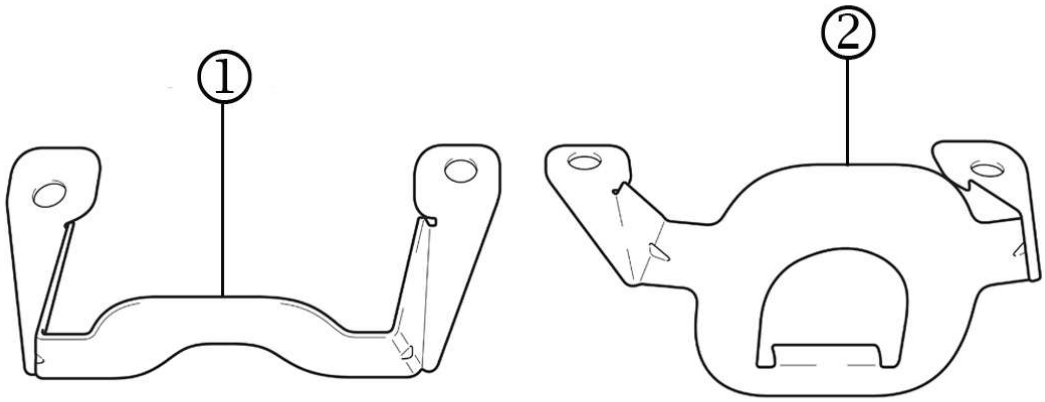

3607880

14. Confirm the identification of the stopper and the position determining plate. ***THEY ARE DIFFERENT.*** Refer to the illustration: (1) Stopper Plate (2) Position Determining Plate.

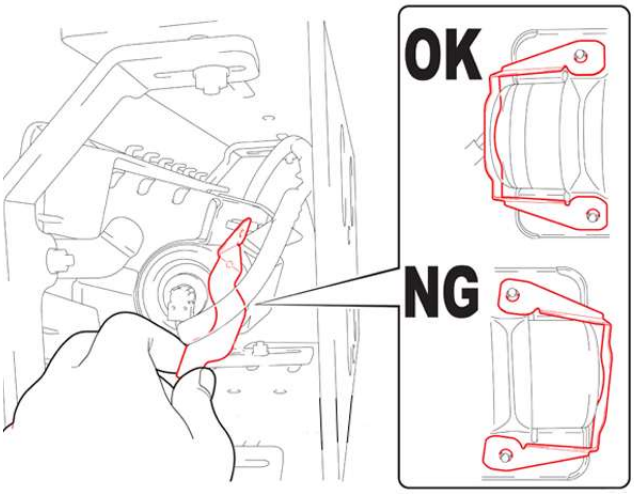

3607886

Warning: Confirm the stopper plate to inflator fitment is correct. *DO NOT* pinch the harness between the inflator and the stopper plate.

15. Loosely install a *new* stopper plate.

    15.1 Place the ***NEW*** stopper plate on the air bag assembly on the side where the harness is already connected.

    15.2 Confirm the end of the inflator sits flat against the stopper plate. If they do not align the inflator is installed backward.

    15.3 Install ***NEW*** stopper plate nuts by hand. They will be torqued on a later step.

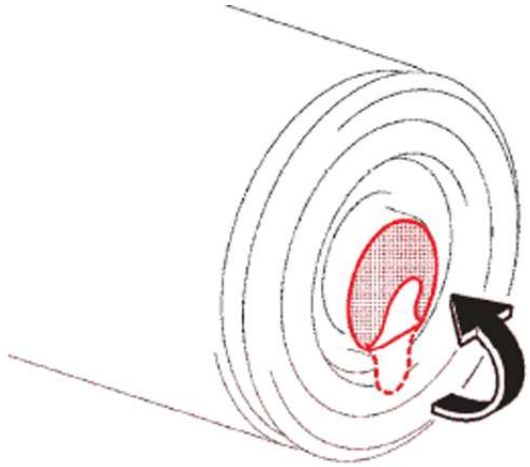

3470378

Note: *DO NOT* fully remove the seal until just before connecting the harness.

16. Fold the seal in order to prevent it from being caught under the position determining plate in the next step.

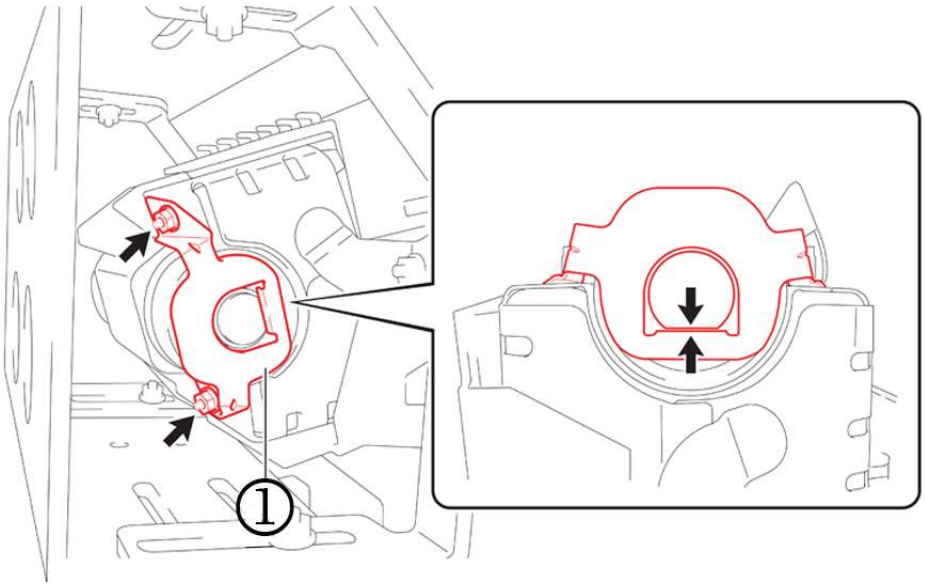

3610413

Warning: Confirm the flats on the position determining plate and inflator are aligned. *DO NOT* pinch the harness between the inflator and the plate.

17. Install the *new* position determining plate.

    17.1 Place the ***NEW*** position determining plate on the air bag assembly on the side with the connector seal.

    17.2 Install ***NEW*** nuts by hand.

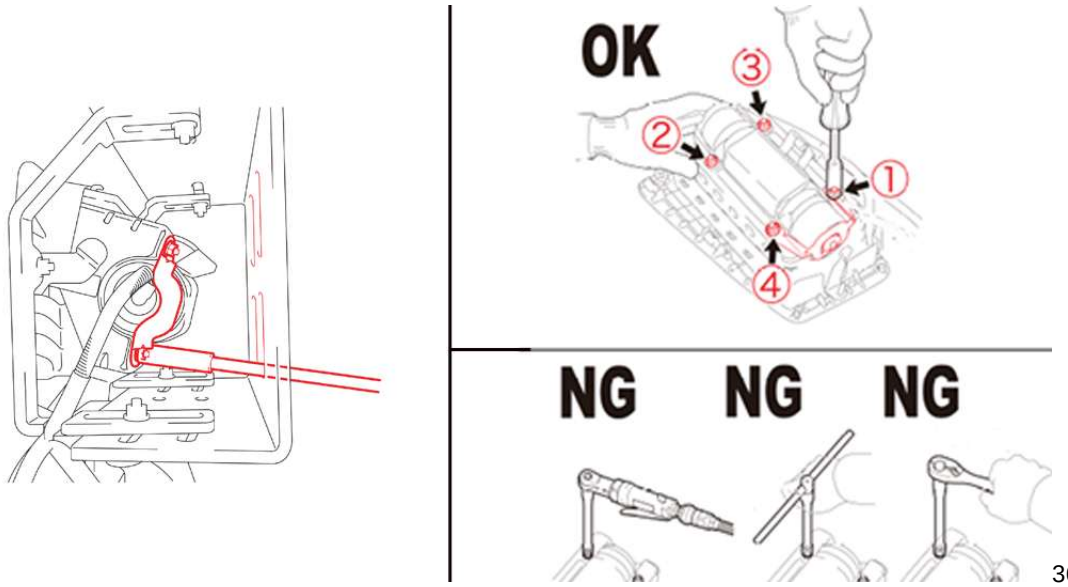

3610416

Caution: There will be some resistance when tightening the nuts because they are self-locking. Confirm the nuts are tightened correctly. *DO NOT* use a power tool, T-handle, or ratchet when tightening the nuts to avoid over-torqueing.

18. Tighten four (4) ***NEW*** plate nuts evenly in several increments in the order shown in the illustration using a 10 mm socket driver while pushing the inflator. (You will encounter some resistance during tightening because these nuts are self-locking nuts.)

Torque Specification: 3.9 Nm (35 in-lb)

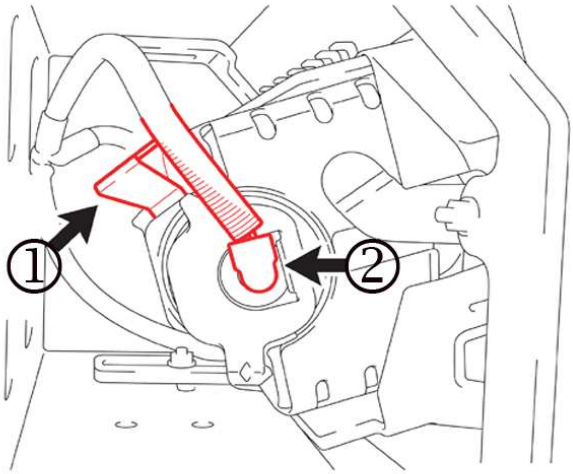

3610412

Warning: The connector should be connected *IMMEDIATELY* after removing the seal. Once the connector is installed it *CANNOT* be removed. If the connector is installed in the incorrect orientation the terminals may be bent or the connector may not fully engage.

19. Connect the inflator connector (2).

    19.1 Remove the connector seal from the inflator.

    19.2 Confirm the alignment of the harness connector as shown in the illustration, and then connect the harness. The connector wires should lead toward the center mounting bracket (1) on the air bag assembly.

20. Remove the air bag assembly from the bracket by removing the two nuts and the air bag assembly. Place the air bag assembly on a cloth.

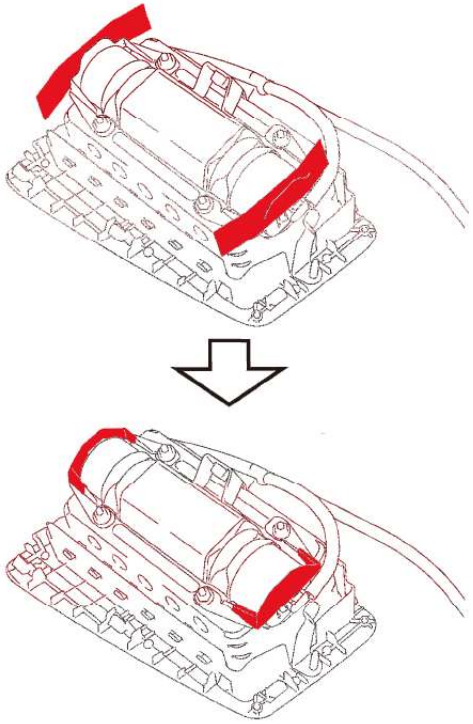

3470478

21. Attach the felt tape to the edges of the stopper and position determining plate.

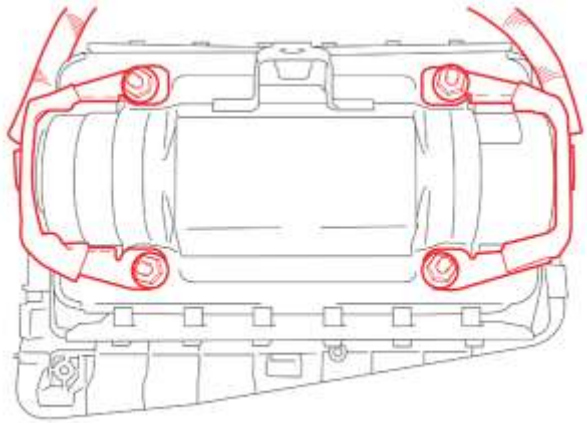

3610415

22. Inspect the air bag before installing it into the vehicle.

    22.1 Confirm that the 4 ***NEW*** plate nuts are installed and tight.

    22.2 Confirm the ***NEW*** stopper and position determining plates are installed.

    22.3 Confirm the flats on the position determining plate and inflator are aligned.

    22.4 Confirm the orientation of the inflator; the yellow wires should face the right side of the vehicle and the red wires should face the left side of the vehicle.

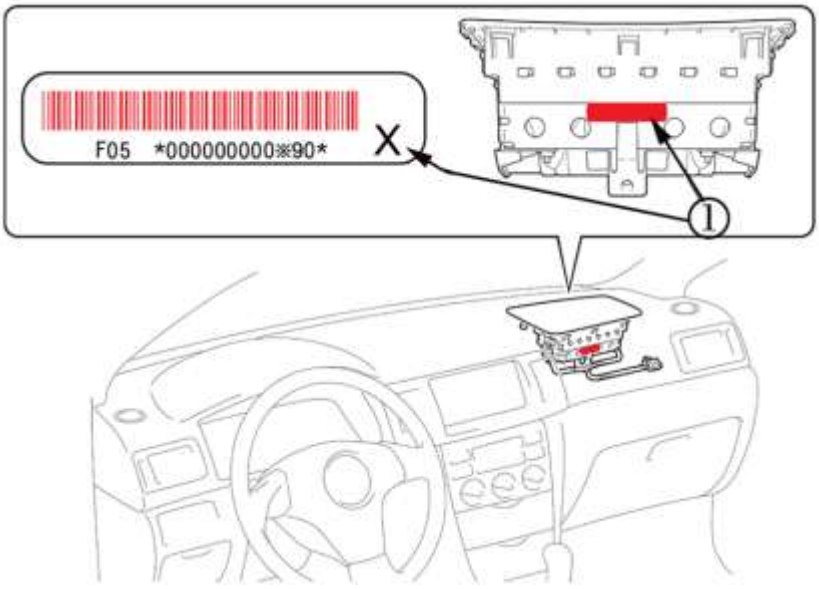

3610495

22.5 Using a pen or marker, put an 'X' in the lower right-hand corner of the air bag bar code label (1).

23. Install the instrument panel passenger air bag assembly. Refer to *Air bag Instrument Panel Module Replacement* in SI.

Note: This field action bulletin provides service repair and labor time information for replacing the passenger side air bag inflator module. Other repairs, if required, are to be billed under warranty, goodwill assistance or customer pay.

24. Connect scan tool and check for DTCs.

    24.1 Clear DTCs, if present.

    24.2 If DTCs are still present, record set DTCs on the job card.

25. Install the instrument panel (IP) compartment. Refer to Instrument Panel Compartment Replacement in SI.

WARRANTY TRANSACTION INFORMATION

Submit a transaction using the table below. All transactions should be submitted as a ZFAT transaction type, unless noted otherwise.

Labor Code	Description	Labor Time
9100125	Inspect Inflator Bar Code – Replacement not Required	0.5
9100126	Replace Inflator (Includes Bar Code Inspection)	1.1 *

* Includes 0.2 hour administrative allowance for return of the used inflator (document preparation and packaging).

CUSTOMER NOTIFICATION – For US and Canada

General Motors will notify customers of this recall on their vehicle (see copy of customer letter included with this bulletin).

DEALER RECALL RESPONSIBILITY – For US (US States, Territories, and Possessions)

It is a violation of Federal law for a dealer to deliver a new motor vehicle or any new or used item of motor vehicle equipment (including a tire) covered by this notification under a sale or lease until the defect or noncompliance is remedied.

The US National Traffic and Motor Vehicle Safety Act provides that each vehicle that is subject to a recall of this type must be adequately repaired within a reasonable time after the customer has tendered it for repair. A failure to repair within sixty days after tender of a vehicle is prima facie evidence of failure to repair within a reasonable time. If the condition is not adequately repaired within a reasonable time, the customer may be entitled to an identical or reasonably equivalent vehicle at no charge or to a refund of the purchase price less a reasonable allowance for depreciation. To avoid having to provide these burdensome remedies, every effort must be made to promptly schedule an appointment with each customer and to repair their vehicle as soon as possible. In the recall notification letters, customers are told how to contact the US National Highway Traffic Safety Administration if the recall is not completed within a reasonable time.

DEALER RECALL RESPONSIBILITY – All

All unsold new vehicles in dealers' possession and subject to this recall must be held and inspected/repaired per the service procedure of this recall bulletin before customers take possession of these vehicles.

Dealers are to service all vehicles subject to this recall at no charge to customers, regardless of mileage, age of vehicle, or ownership, from this time forward.

Customers who have recently purchased vehicles sold from your vehicle inventory, and for which there is no customer information indicated on the dealer listing, are to be contacted by the dealer. Arrangements are to be made to make the required correction according to the instructions contained in this bulletin. A copy of the customer letter is provided in this bulletin for your use in contacting customers. Recall follow-up cards should not be used for this purpose, since the customer may not as yet have received the notification letter.

GM bulletins are intended for use by professional technicians, NOT a "do-it-yourselfer". They are written to inform these technicians of conditions that may occur on some vehicles, or to provide information that could assist in the proper service of a vehicle. Properly trained technicians have the tools, equipment, safety instructions, and know-how to do a job properly and safely. If a condition is described, DO NOT assume that the bulletin applies to your vehicle, or that your vehicle will have that condition. See your dealer for information on whether your vehicle may benefit from the information.

We Support Voluntary Technician Certification

November 2013

Dear General Motors Customer:

This notice is sent to you in accordance with the requirements of the National Traffic and Motor Vehicle Safety Act.

You may have previously received a letter from GM telling you about this safety recall and that you would be receiving another letter when the required parts became available. The purpose of this letter is to let you know that the parts needed to perform the required repair are now available and you should contact your GM dealer to schedule a service appointment.

The Pontiac Vibe was manufactured by New United Motor Manufacturing, Inc. (NUMMI), a joint venture between Toyota and GM.

Toyota has decided that a defect, which relates to motor vehicle safety, exists in certain 2003 and 2004 model year Pontiac Vibe vehicles. As a result, GM is conducting a safety recall. We apologize for this inconvenience. However, we are concerned about your safety and continued satisfaction with our products.

IMPORTANT

- Your vehicle is involved in safety recall 13112.
- Schedule an appointment with your GM dealer.
- This service will be performed for you at **no charge**.

Why is your vehicle being recalled?

Your vehicle is equipped with a front passenger air bag inflator which could have been assembled with improperly manufactured propellant wafers. Improperly manufactured propellant wafers could cause the inflator to rupture and the front passenger air bag to deploy abnormally in the event of a crash, increasing the risk of injury to the occupant.

What will we do?

Your GM dealer will inspect your vehicle and, if necessary, replace the front passenger air bag inflator. This service will be performed for you at **no charge**. Because of service scheduling requirements, it is likely that your dealer will need your vehicle longer than the actual inspection and service correction time of approximately one hour.

What should you do?

You should contact your GM dealer to arrange a service appointment as soon as possible.

Do you have questions?

If you have questions or concerns that your dealer is unable to resolve, please contact the appropriate Customer Assistance Center at the number listed below.

Division	Number	Text Telephones (TTY)
Pontiac	1-800-762-2737	1-800-833-7668
Guam	65-6267-1752	
Puerto Rico – English	1-800-496-9992	
Puerto Rico – Español	1-800-496-9993	
Virgin Islands	1-800-496-9994	

If after contacting your dealer and the Customer Assistance Center, you are still not satisfied we have done our best to remedy this condition without charge and within a reasonable time, you may wish to write the Administrator, National Highway Traffic Safety Administration, 1200 New Jersey Avenue, SE, Washington, DC 20590, or call the toll-free Vehicle Safety Hotline at 1.888.327.4236 (TTY 1.800.424.9153), or go to http://www.safercar.gov. The National Highway Traffic Safety Administration Campaign ID Number for this recall is 13V133.

Federal regulation requires that any vehicle lessor receiving this recall notice must forward a copy of this notice to the lessee within ten days.

Jim Moloney
General Director,
Customer and Relationship Services

GM Recall #13112