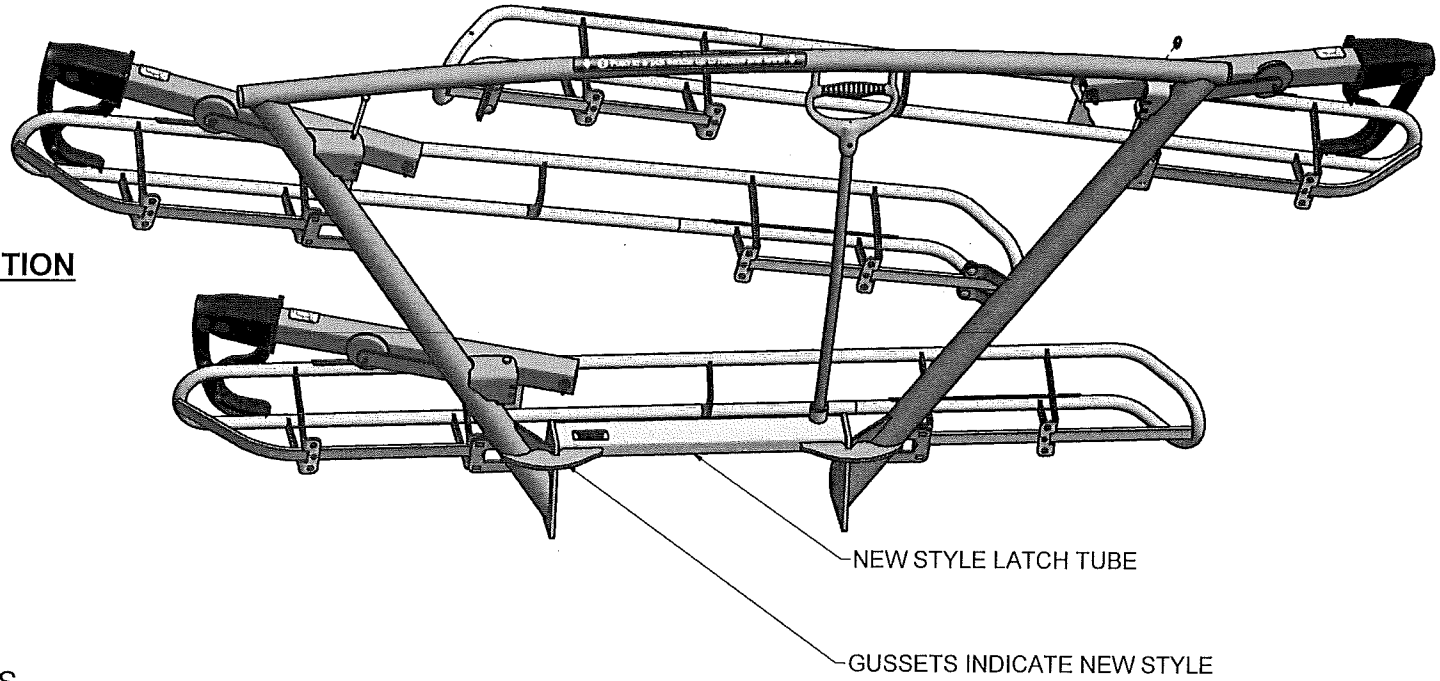

APEX REWORK PREPARATION

REQUIRED TOOLS:

3/4" SOCKET AND DRIVER
3/4" WRENCH
7/16" SOCKET
7/32" SOCKET
5/32" ALLEN WRENCH
6" SOCKET EXTENSION
1/8" DIAMETER PUNCH
3/16" DIAMETER PUNCH
HAMMER
ROLLING CART FOR PARTS
SMALL PARTS TRAYS

SCOPE OF WORK

THESE INSTRUCTIONS DESCRIBE THE REPLACEMENT OF THE MAIN FRAME OF THE APEX 3 BIKE RACK. SOME MOUNTING HARDWARE WILL ALSO BE REPLACED DURING THIS PROCESS. ALL REQUIRED PARTS ARE SUPPLIED IN THE 101065 REWORK KIT.
ESTIMATED COMPLETION TIME PER RACK : 40MIN

BEFORE YOU BEGIN

IMPORTANT! BEFORE YOU BEGIN, INSPECT THE LATCH TUBE OF THE FRAME TO BE REWORKED. THIS REWORK REPLACES THE OLD VERSION FRAME (UTILZING A SMALLER LATCH TUBE, 1.5" X .75") WITH THE NEW VERSION FRAME (UTILIZING A LARGER LATCH TUBE, 2" X 1"). IF THE FRAME TO BE REWORKED IS FOUND TO HAVE THE NEW (2" X 1") LATCH TUBE, STOP AND CONTACT CUSTOMER SERVICE AT 1-425-483-7000. NO REWORK IS REQUIRED IN THIS CASE.

REVISION HISTORY

REV	DESCRIPTION	DATE	APPR
B	ADDED RE-ASSEMBLY INSTRUCTIONS	9/05/2013	JMS
B	INITIAL RELEASE	6/6/2013	JEB

REFER TO ERP BOM FOR PACKAGING MATERIALS AND OTHER SMALL PARTS SHIPPED WITH MAIN ASSEMBLY.

PROPRIETARY THIS IS PROPRIETARY INFORMATION AND IS NOT TO BE REPRODUCED OR DISTRIBUTED WITHOUT PRIOR WRITTEN AUTHORIZATION OF SPORTWORKS NW, INC.

Onmarkmfg / SPORTWORKS NW, INC.
15540 Woodinville-Redmond Rd NE, #A-200
Woodinville, WA 98072-9930 PH 425 483-7000 FX 425 488-5001

DRAWN jacobe 6/6/2013
CHECKED

TITLE REWORK - APEX MAIN FRAME AND HARDWARE
SIZE B DWG NO 5321 REV B
SCALE SHEET 1 OF 5

SUPPLIED REPLACEMENT PARTS
PN 101065

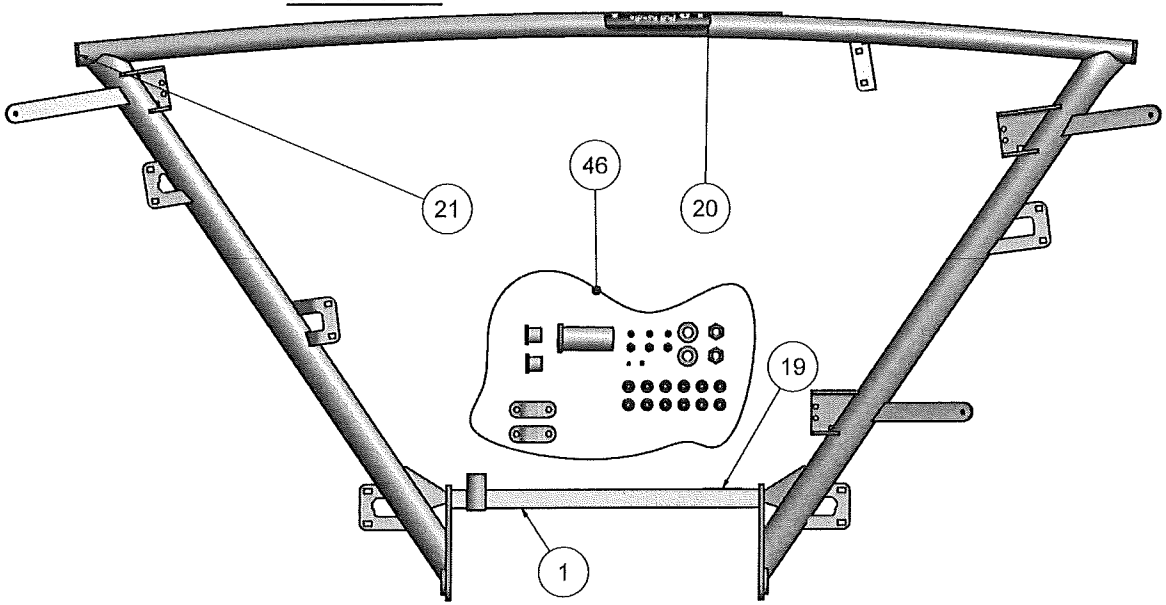

PARTS LIST - ALL		
ITEM	DESCRIPTION	QTY
1	Weldment, Apex 3 Frame, Stainless, Bead Blast	1
19	MMT Patent Decal	1
20	LABEL, # 1, Pull Handle to Stow Rack/ Push In & Pull Handle Up to Release and Lower	1
21	CAP, PLASTIC, ROUND, 1-1/4"	2
46	BOLT KIT - APEX REWORK	1

5312 REWORK BOLT KIT

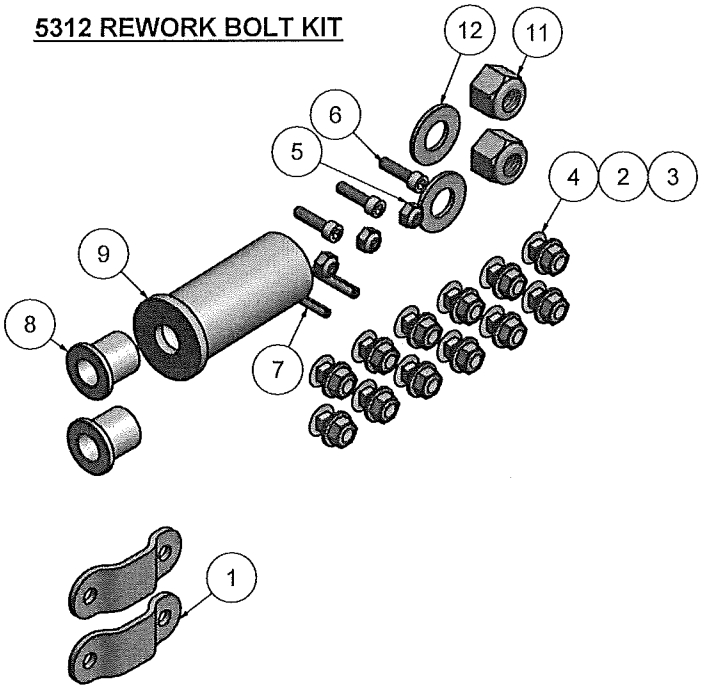

PARTS LIST - ALL		
ITEM	DESCRIPTION	QTY
1	Strap, Apex Tray Mount	2
2	WASHER, FLAT, 1/4 SS	12
3	NUT; 1/4-20 DEFORMED THREAD SELF LOCKING; SST	12
4	BOLT, CARRIAGE, 1/4-20 x .625, Stainless	12
5	NUT, NYLOCK 10-32, SS	3
6	SHCS, 10-32 X 3/4, SS	3
7	PIN, ROLL 5/32 X .75, 18-8 SS	1
8	BEARING, FLANGE, .500 ID x .750 OD x 1.0L, STAINLESS	2
9	Weldment, Apex Torsion Spring Mount	1
10	PIN, ROLL 3/16 X 1, 18-8 SS	1
11	NUT, HEX, Nylock, 1/2-13, Stainless	2
12	WASHER, SAE 1/2	2

REFER TO ERP BOM FOR PACKAGING MATERIALS AND OTHER SMALL PARTS SHIPPED WITH MAIN ASSEMBLY.

PROPRIETARY THIS IS PROPRIETARY INFORMATION AND IS NOT TO BE REPRODUCED OR DISTRIBUTED WITHOUT PRIOR WRITTEN AUTHORIZATION OF SPORTWORKS NW, INC.

Onmarkmfg / SPORTWORKS NW, INC.
15540 Woodinville-Redmond Rd. NE, #A-200
Woodinville, WA 98072-9930 PH 425 483-7000 FX 425 488-5001

DRAWN jacobe 6/6/2013
CHECKED

TITLE REWORK - APEX MAIN FRAME AND HARDWARE

SIZE B DWG NO 5321 REV B

SCALE SHEET 2 OF 5

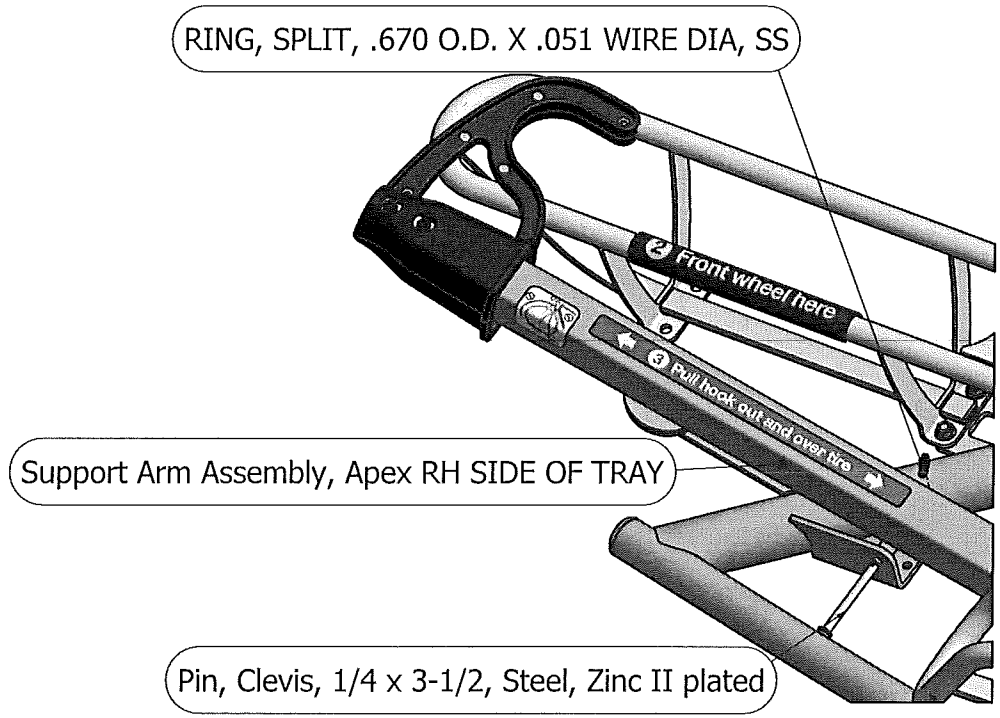

STEP 1 DISASSEMBLE
REMOVE (3) SPLIT RING AND CLEVIS PIN. REMOVE (3) SUPPORT ARMS.

RE-ASSEMBLE
INSERT CLEVIS, COIL IN SPLIT RING

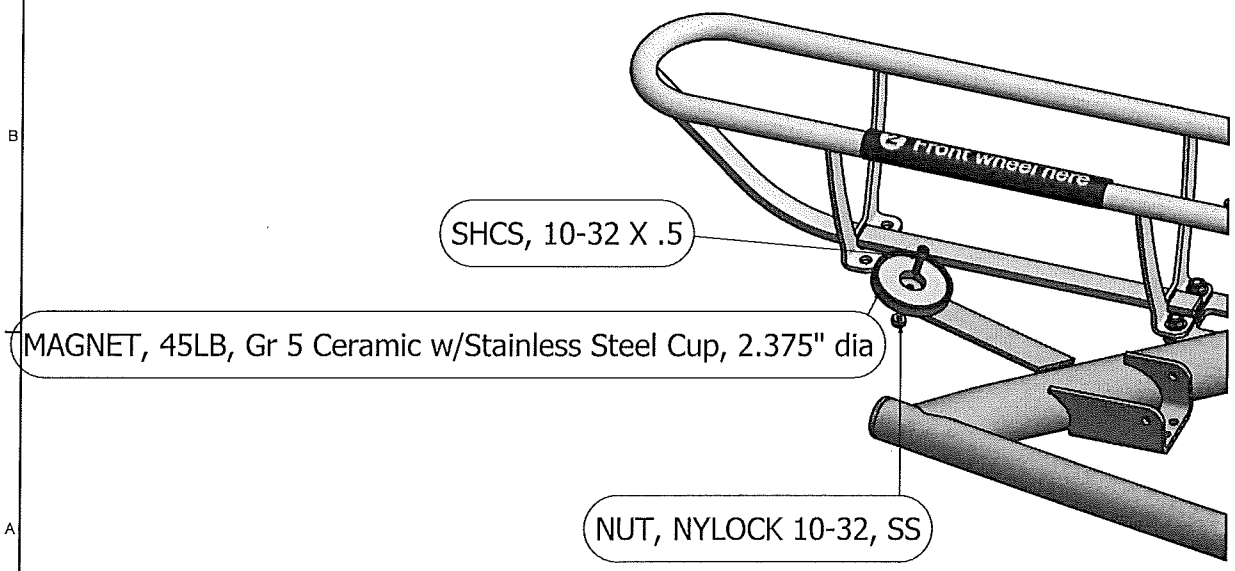

STEP 2 DISASSEMBLE
USING A 7/32" SOCKET AND 5/32" ALLEN WRENCH, REMOVE (3) SUPPORT ARM MAGNETS. DISCARD SCREWS AND NUTS.

RE-ASSEMBLE
INSERT SCREW THRU MAGNET CUP, INSTALL NYLOCK UNTIL 2-3 THREADS PROTRUDE BEYOND END OF NUT

REFER TO ERP BOM FOR PACKAGING MATERIALS AND OTHER SMALL PARTS SHIPPED WITH MAIN ASSEMBLY.	PROPRIETARY THIS IS PROPRIETARY INFORMATION AND IS NOT TO BE REPRODUCED OR DISTRIBUTED WITHOUT PRIOR WRITTEN AUTHORIZATION OF SPORTWORKS NW, INC.	TITLE	REWORK - APEX MAIN FRAME AND HARDWARE
	Onmarkmfg / SPORTWORKS NW, INC. 15540 Woodinville-Redmond Rd NE, #A-200 Woodinville, WA 98072-6930 PH 425 453-7000 FX 425 488-9001	DRAWN jacobe 6/6/2013	SIZE B DWG NO 5321 REV B
		CHECKED	SCALE SHEET 3 OF 5

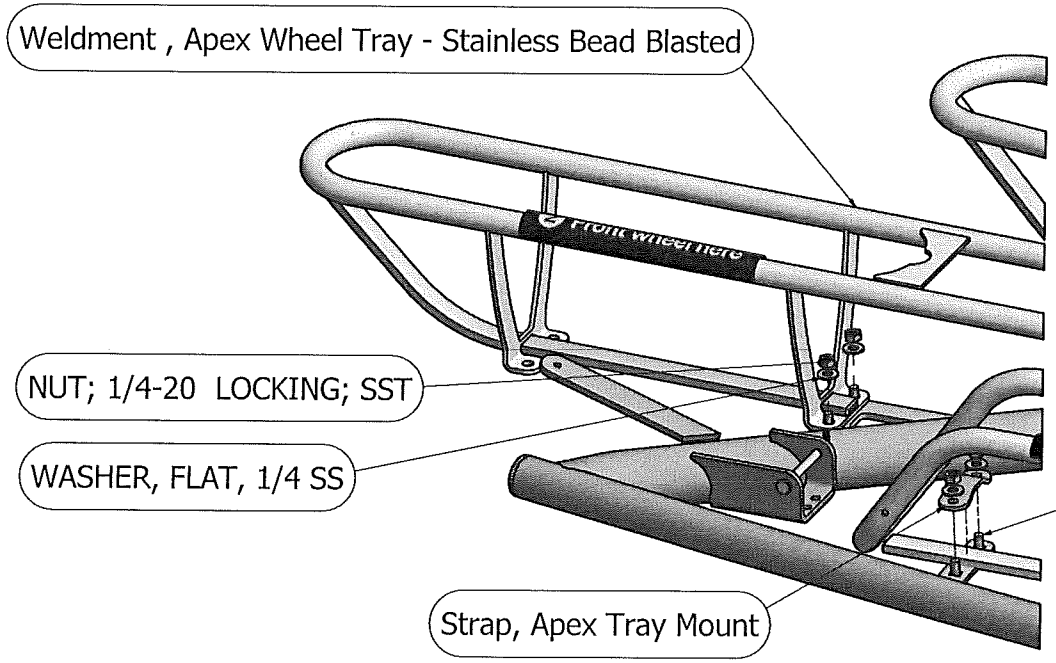

STEP 3 DISASSEMBLE

USING A 7/16" SOCKET AND 6" EXTENSION, REMOVE (3) WHEEL TRAYS. DISCARD (12) BOLTS, (12)NUTS AND (2) STRAPS.

RE-ASSEMBLE

INSTALL NEW STRAPS, CARRIAGE SCREWS NUTS & WASHERS. TORQUE NUTS TO 60-80 IN-LB.

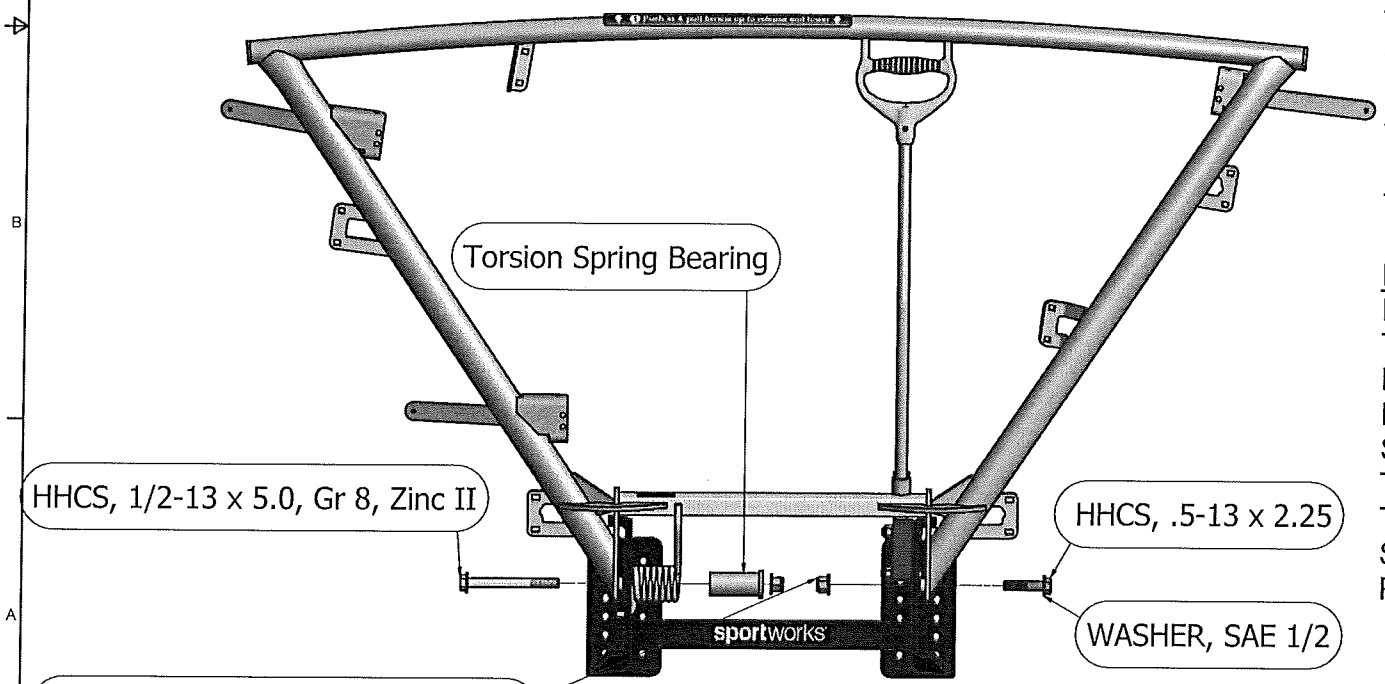

STEP 4 DISASSEMBLE

PUT RACK IN STOWED POSITION TO RELEASE SPRING TENSION. USING 3/4" SOCKET AND 3/4" WRENCH, REMOVE PIVOT BOLTS BOTH SIDES. DISCARD NUTS AND TORSION SPRING BEARING.

RE-ASSEMBLE

PUT BUSHINGS INTO RACK PIVOT TABS, PLACE RACK ONTO PIVOT PLATE IN STOWED POSITION. INSTALL SPRING BEARING, SPRING, BOLTS AND NUTS. TORQUE TO 40-60 FT-LB. VERIFY THAT RACK LATCHES IN THE STOWED AND DEPLOYED POSITION.

REFER TO ERP BOM FOR PACKAGING MATERIALS AND OTHER SMALL PARTS SHIPPED WITH MAIN ASSEMBLY.

PROPRIETARY THIS IS PROPRIETARY INFORMATION AND IS NOT TO BE REPRODUCED OR DISTRIBUTED WITHOUT PRIOR WRITTEN AUTHORIZATION OF SPORTWORKS NW, INC.

Onmarkmfg / SPORTWORKS NW, INC.
15540 Woodinville-Redmond Rd. NE, #A-200
Woodinville, WA 98072-6930 PH 425 483-7000 FX 425 468-5001

DRAWN jacobe 6/6/2013
CHECKED

TITLE REWORK - APEX MAIN FRAME AND HARDWARE

SIZE B | DWG NO 5321 | REV B

SCALE | SHEET 4 OF 5

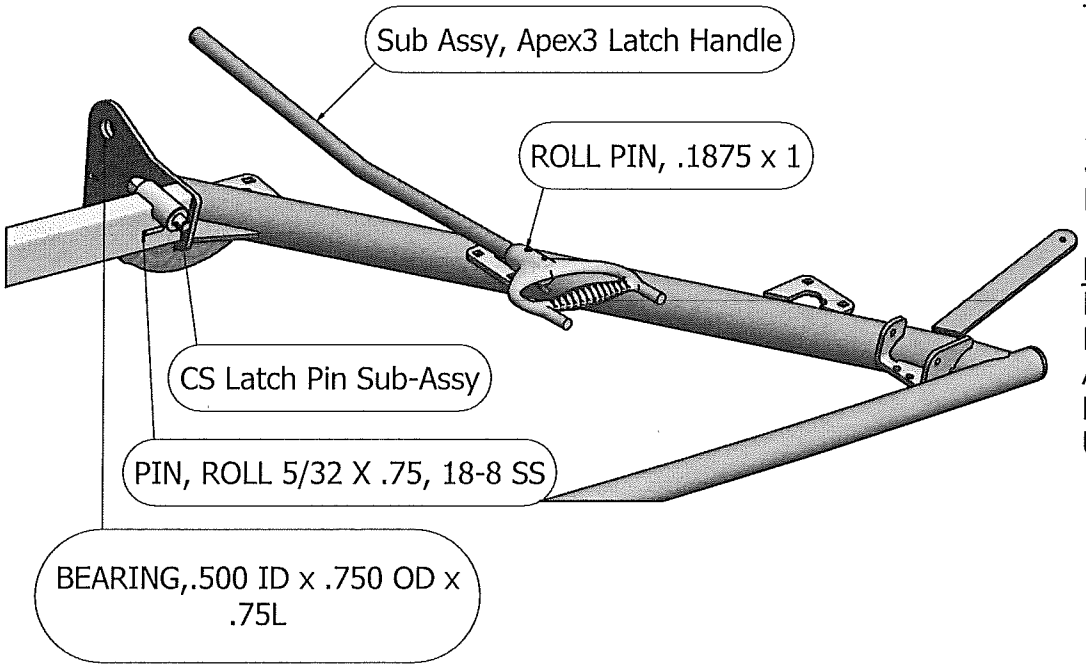

STEP 5 DISASSMBLE

USING A 1/8" DIA. PUNCH AND HAMMER, REMOVE 5/32" ROLL PIN AND DISCARD. USING A 3/16" DIA. PUNCH AND HAMMER, REPLACE 3/16" ROLL PIN IN HANDLE WITH SUPPLIED PART. REMOVE AND DISCARD PIVOT BUSHINGS.

RE-ASSEMBLE

INSTALL LATCH PIN SUB INTO FRAME, INSTALL LATCH HANDLE ONTO PIN SUB AND INTO FRAME TUBE. LINE UP ROLL PIN HOLE AND TAP IN NEW 5/32" ROLL PIN UNTIL CENTERED.

STEP 6

REASSEMBLE IN REVERSE ORDER USING SUPPLIED REPLACEMENT PARTS. BE SURE TO NOTE THE ORIENTATION OF THE WHEEL TRAYS AND ARMS.

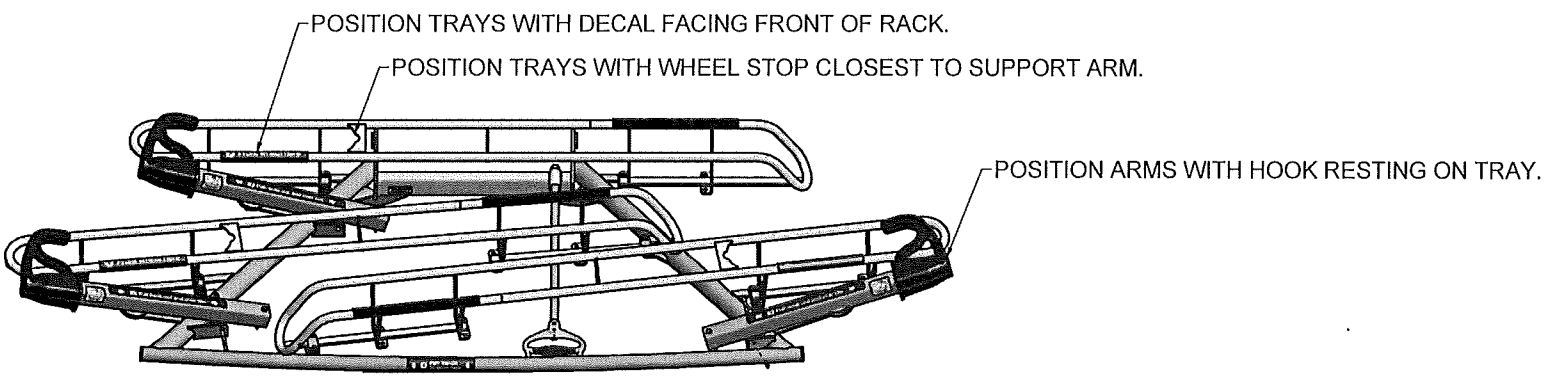

REFER TO ERP BOM FOR PACKAGING MATERIALS AND OTHER SMALL PARTS SHIPPED WITH MAIN ASSEMBLY.	PROPRIETARY THIS IS PROPRIETARY INFORMATION AND IS NOT TO BE REPRODUCED OR DISTRIBUTED WITHOUT PRIOR WRITTEN AUTHORIZATION OF SPORTWORKS NW, INC.		TITLE REWORK - APEX MAIN FRAME AND HARDWARE
	Onmarkmfg / SPORTWORKS NW, INC. 15540 Woodinville-Redmond Rd. NE, #A-200 Woodinville, WA 98072-6930 PH 425 483-7000 FX 425 483-9001	DRAWN jacobe 6/6/2013 CHECKED	SIZE B DWG NO 5321 REV B SCALE SHEET 5 OF 5