# Essential Tool
Shipment

TECH·MATE
TOOL & EQUIPMENT PROGRAM
1-800-662-2001 • nissantechmate.com

BOSCH

## TO: Dealer Principal and Dealer Service Manager
## Infiniti

August 2013

*The following special service tool has been classified essential by Nissan North America, Inc.*

**J-51315-KIT**
**Airbag Module Support**
**Applications: 2001 - 2004 FX, QX4, and future applications**

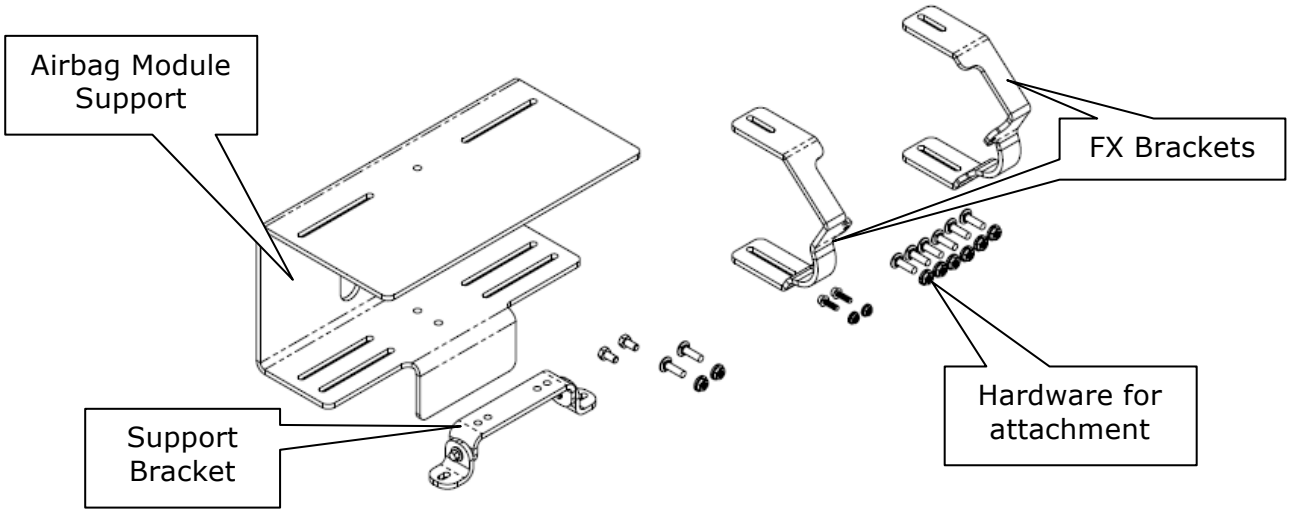


The J-51315-KIT Airbag Module Support is utilized during the airbag service procedure per the technical bulletin instructions. Reference the service bulletin for additional information on proper use.

*The J-51315-KIT tool will not be invoiced to your Infiniti Non-Vehicle Account, in accordance with your dealer agreement with Nissan North America, Inc.*

*Essential tools are critical to proper vehicle diagnosis, service and repair. For this reason, Nissan's Dealer Sales and Service Agreement Standard Provisions require that Dealers obtain and maintain those tools identified by NNA as essential. Before any tool is designated as essential, Nissan engineering determines the need for the tool, and works closely with TechMate to validate each tool's function on the applied make/model. Additionally, Nissan considers any commercially available tool options prior to every tool release. Actual tool costs are driven by timing requirements, design, materials selected, manufacturing process, and low tool production volumes. Each tool is maintained in TechMate inventory for over ten years after make/model end-of-production.*

**Bosch Automotive Service Solutions**

655 Eisenhower Drive
Owatonna, MN 55060-0995
Phone 800-662-2001
Fax 586-578-7375

Promotion# IF13-263