Bulletin No.: 12180C
Date: June 2013

Recall Bulletin

PRODUCT SAFETY RECALL

SUBJECT: Driver Door Switch Short Circuit

MODELS: 2006-2007 Buick Rainier
2006 Chevrolet TrailBlazer EXT
2006-2007 Chevrolet TrailBlazer
2006 GMC Envoy XL
2006-2007 GMC Envoy
2005-2007 Saab 9-7X

An inspection and service procedure overview has been added to service procedure. Please discard all copies of bulletin 12180B.

CONDITION

General Motors has decided that a defect, which relates to motor vehicle safety, exists in **certain** 2006 model year Chevrolet TrailBlazer EXT and GMC Envoy XL; 2006-2007 model year Buick Rainier, Chevrolet TrailBlazer, and GMC Envoy; and 2005-2007 model year Saab 9-7X vehicles. If fluid enters the driver's door module, it may cause corrosion that could result in a short in the circuit board. A short may cause the power door lock and power window switches to function intermittently or become inoperative. In rare cases, a short may cause overheating, which could melt components of the door module, producing odor, smoke, or a fire.

CORRECTION

Dealers are to test the driver's window and door lock switches for proper operation. If the switches function properly, dealers are to install a protective coating to the door module. If the switches do not function properly, dealers are to install a new door module.

Owners of 2005-2007 model year Saab 9-7X vehicles delivered in the U.S. or Canada will receive a separate notification and be addressed by Saab Authorized Service Centers. This bulletin applies to those 2005-2007 model year Saab 9-7X vehicles delivered outside of the U.S. and Canada that are subject to this safety recall.

Copyright 2013 General Motors. All Rights Reserved.

VEHICLES INVOLVED

All involved vehicles are identified by Vehicle Identification Number on the Investigate Vehicle History screen in GM Global Warranty Management system. Dealership service personnel should always check this site to confirm vehicle involvement prior to beginning any required inspections and/or repairs. It is important to routinely use this tool to verify eligibility because not all similar vehicles may be involved regardless of description or option content.

For dealers with involved vehicles, a listing with involved vehicles containing the complete vehicle identification number, customer name, and address information has been prepared and will be provided to US and Canadian dealers through the GM GlobalConnect Recall Reports, or sent directly to export dealers. Dealers will not have a report available if they have no involved vehicles currently assigned.

The listing may contain customer names and addresses obtained from Motor Vehicle Registration Records. The use of such motor vehicle registration data for any purpose other than follow-up necessary to complete this recall is a violation of law in several states/provinces/countries. Accordingly, you are urged to limit the use of this report to the follow-up necessary to complete this recall.

PART INFORMATION

Parts required to complete this recall are to be obtained from General Motors Customer Care and Aftersales (GMCC&A). Please refer to your “involved vehicles listing” before ordering parts. Normal orders should be placed on a DRO = Daily Replenishment Order. In an emergency situation, parts should be ordered on a CSO = Customer Special Order.

Part Number	Description	Quantity/ Vehicle
19119236	SWITCH KIT,SI WDO	1

SERVICE PROCEDURE

INSPECTION and SERVICE PROCEDURE OVERVIEW

Complete the Door Lock and Side Window Switch Inspection

Perform a functional test on the driver side door lock and side window switch. Test all switch functions to ensure that the driver side door lock and side window switch functions as designed.

- If the driver side door lock and side window switch passes the functional test and the switch part number matches one of the part numbers on the table, NO repair is required.
- If the driver side door lock and side window switch passes the functional test and the switch part number is NOT listed on the table in the bulletin, perform the service repair procedure in the bulletin.
- If the driver side door lock and side window switch does NOT pass the functional test, replace the driver side door lock and side window switch. Refer to *Door Lock and Side Window Switch Replacement - Driver Side* in SI.

Ensure that the Service Repair Procedure is Completed Correctly

1. The cure time for the protective coating is 1 hour. To avoid part damage, do NOT remove the ESD protective barrier or assemble the door module until the protective coating has cured.
2. Remove the ESD protective barrier (1) from the contact board BEFORE assembling the door module. Do NOT assemble the door module with the ESD protective barrier on the contact board.
3. After completing the repair, perform a functional test on the driver side door lock and side window switch. Test all switch functions to ensure the driver side door lock and side window switch functions as designed.

1. Perform a functional test on the driver side door lock and side window switch. Test all switch functions to ensure the driver side door lock and side window switch functions as designed.
   - If the driver side door lock and side window switch passes the functional test, proceed to Step 2.
   - If the driver side door lock and side window switch does NOT pass the functional test, replace the driver side door lock and side window switch. Refer to *Door Lock and Side Window Switch Replacement - Driver Side* in SI.

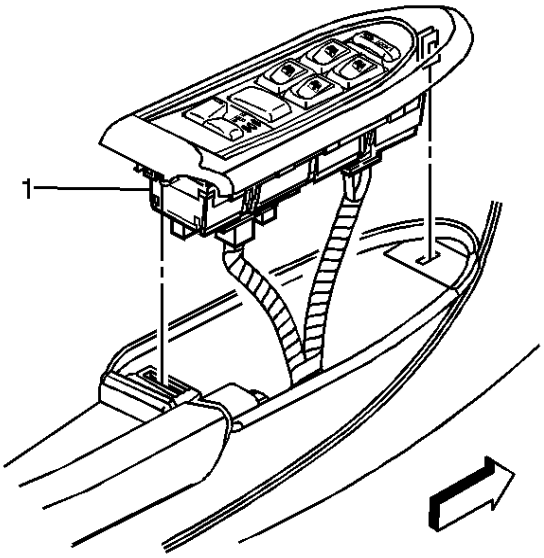

690976

2. Remove the driver side door lock and side window switch. Refer to *Door Lock and Side Window Switch Replacement - Driver Side* in SI.

Part Number		Description & Options
Chevrolet		
	25861573	SWITCH, DR LK & SI WDO (CASHMERE) ST1 (DL2, KA1, X88, 27I) (EXPORT)
	25861577	SWITCH, DR LK & SI WDO (CASHMERE) ST1 (DL2, X88, 27I) (EXC KA1) (EXPORT)
	25861580	SWITCH, DR LK & SI WDO (CASHMERE) (DK2, DK9, DP2, DR1, X88, 27I) (EXC KA1)
	25861584	SWITCH, DR LK & SI WDO (CASHMERE) (DK2, DP2, DS3, KA1, X88, 27I)
25861574	25866999	SWITCH, DR LK & SI WDO (GRAY) (DL2, KA1, X88, 28I) (EXPORT)
25861575	25867000	SWITCH, DR LK & SI WDO (EBONY) (DK2, DP2, DS3, KA1, X88, 48I)
25861576	25867001	SWITCH, DR LK & SI WDO (GRAY) (DK2, DP2, DS3, KA1, X88, 28I)
25861578	25867002	SWITCH, DR LK & SI WDO (EBONY) ST1 (DL2, X88, 48I) (EXC KA1) (EXPORT)
25861579	25867003	SWITCH, DR LK & SI WDO (GRAY) ST1 (DL2, X88, 28I) (EXC KA1) (EXPORT)
25861581	25867004	SWITCH, DR LK & SI WDO (EBONY) (DK2, DK9, DP2, DR1, X88, 48I) (EXC KA1)
25861582	25867005	SWITCH, DR LK & SI WDO (GRAY) (DK2, DK9, DP2, DR1, X88, 28I) (EXC KA1)
25861583	25867006	SWITCH, DR LK & SI WDO (EBONY) (DL2, KA1, X88, 48I) (EXPORT)
GMC		
25861559	25866992	SWITCH, DR LK & SI WDO (EBONY) (AAB KA1 Z88 Z89 27I, 48I)
25861563	25866993	SWITCH, DR LK & SI WDO (EBONY) (Z88, Z89, 27I, 48I) (EXC AAB, KA1)
25861567	25866994	SWITCH, DR LK & SI WDO (GRAY) (Z88, Z89, 28I) (EXC AAB, KA1)
25861569	25866996	SWITCH, DR LK & SI WDO (GRAY) (AAB, KA1, Z88, Z89, 28I)
25861571	25866997	SWITCH, DR LK & SI WDO (EBONY) (AAB, DS3, Z88, 27I, 48I) (EXC KA1)
25861572	25866998	SWITCH, DR LK & SI WDO (GRAY) (AAB, Z88, 28I) (EXC KA1)
Buick		
	25861556	SWITCH, DR LK & SI WDO (INCLS 8) (GRAY) ST1 (KA1, W49, 28I)
	25861557	SWITCH, DR LK & SI WDO (INCLS 8) (CASHMERE) ST1 (KA1, W49, 47I)
	25861560	SWITCH, DR LK & SI WDO (INCLS 8) (GRAY) ST1 (W49, 28I) (EXC KA1)
	25861561	SWITCH, DR LK & SI WDO (INCLS 8) (DK CASHMERE) ST1 (W49, 47I) (EXC KA1)

3. Determine the part number on the driver side door lock and side window switch. The part number is on the side of the switch on the label.
   - If the part number on the switch is listed on the table above, no repair is required. Re-install the driver side door lock and side window switch. Refer to *Door Lock and Side Window Switch Replacement - Driver Side* in SI.
   - If the part number on the switch is NOT listed on the table above, proceed to Step 4.

Caution: *To avoid part damage, ensure your hands and work bench are clean BEFORE performing the door lock and side window switch and door module modifications in this bulletin.*

4. Place the driver side door lock and side window switch assembly on a clean work bench.
5. Separate the door module from the door lock and side window switch assembly.

2917368

5.1 Using a razor blade or equivalent, cut the door module label along the seam of the door module as shown in the illustration.

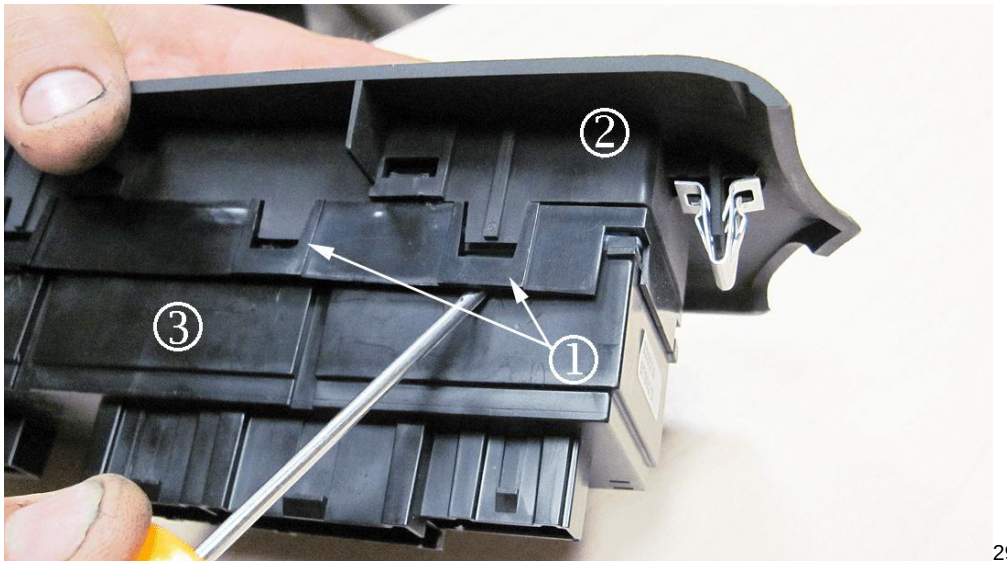

2917370

5.2 Using a small flat-blade screw driver, carefully disengage the door module tabs (1).

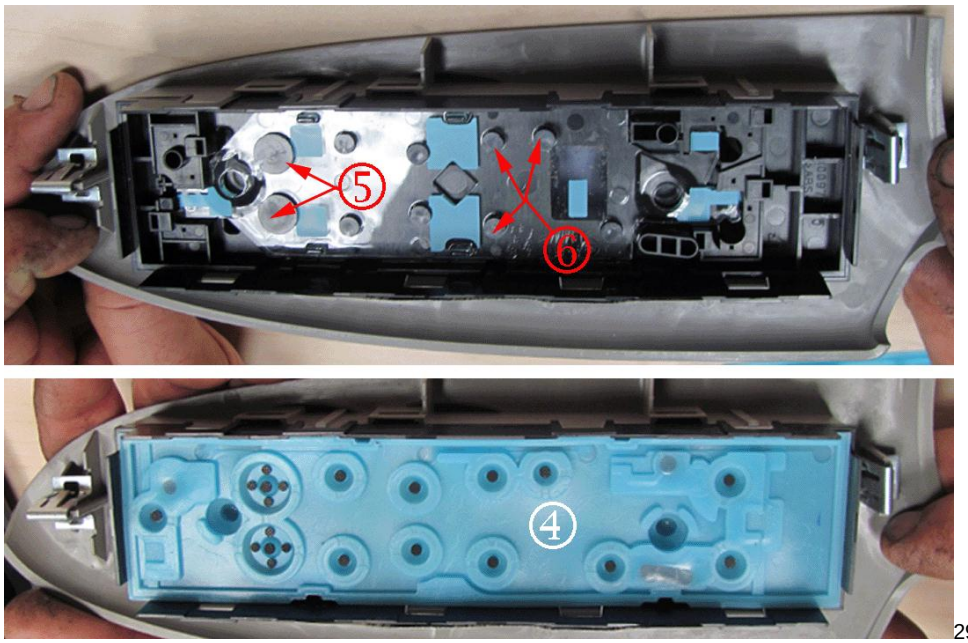

2917371

Note: If the door lock and side window switch assembly membrane sticks (4) to the door module contact board and/or falls out of the door module assembly during the disassembly of the door module and door lock and side window switch assembly, re-install the large actuator pins (5) and small actuator pins (6) and membrane (4). Refer to illustration.

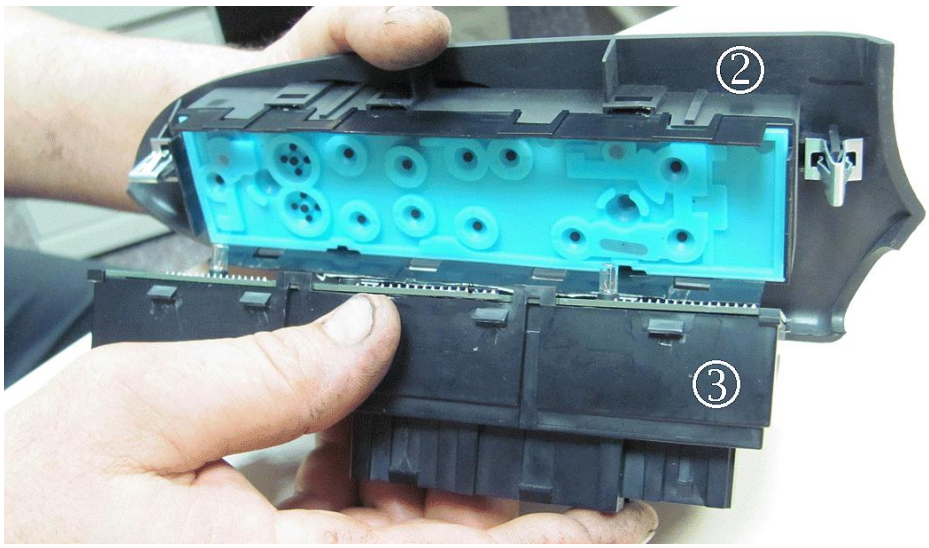

2917377

5.3 Separate the door module (3) from the door lock and side window switch assembly (2).

6. Place the door lock and side window switch assembly in a safe location while modifying the door module.

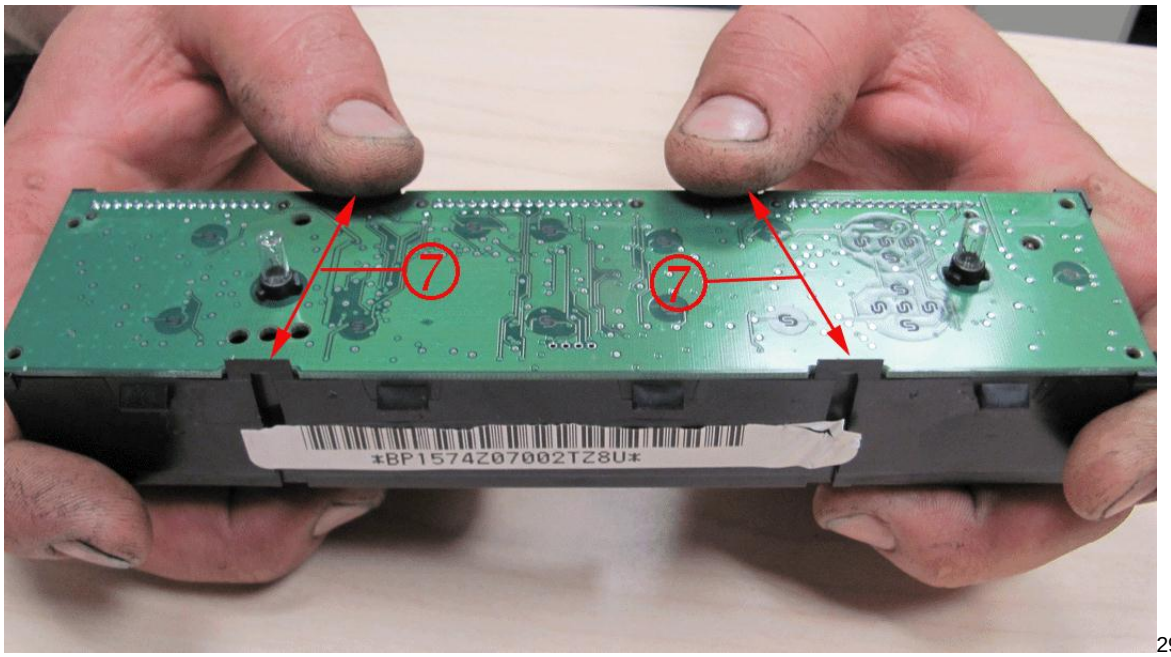

2917376

Note: Refer to *Door Module Repair Tips* in this bulletin before performing Steps 7 through 16.

7. Separate the contact board from the door module housing by depressing the contact board tabs (7). Do NOT remove the contact board from the door module housing.

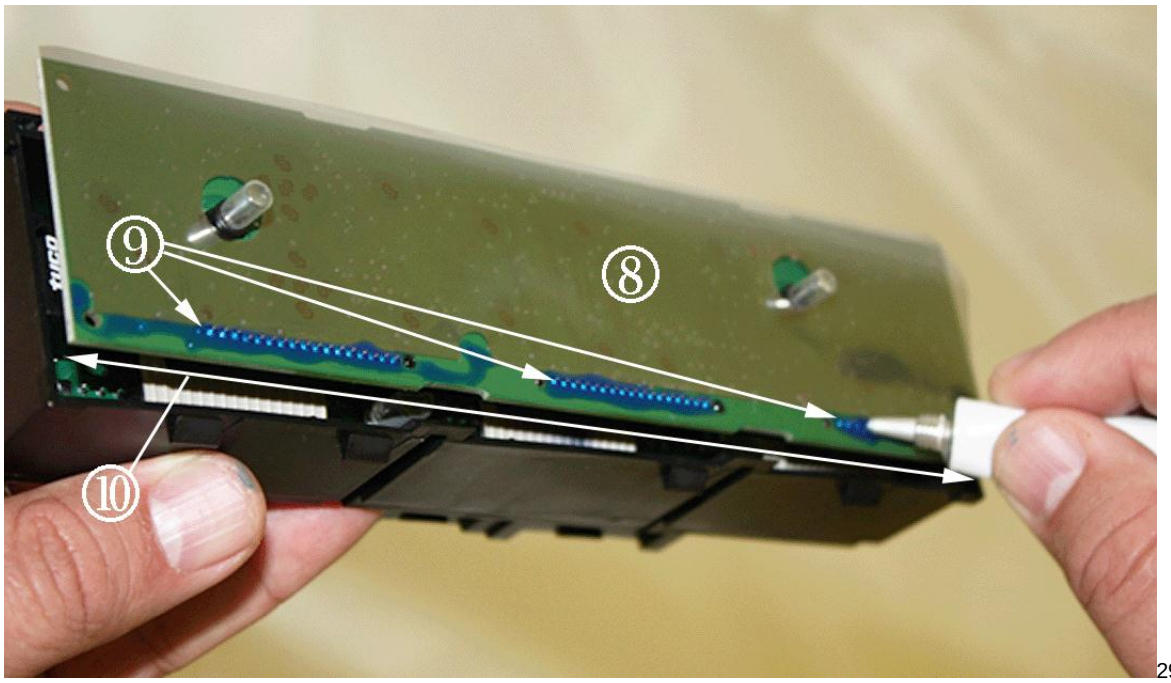

2917379

Note: Do NOT attach the ESD protective barrier (8) over the connector pins (9).

8. Remove the backing paper from the ESD protective barrier (8) and attach it to the contact board. Attach the ESD protective barrier (8) along the edge of the connector pins (9). Refer to illustration.

9. Apply the protective coating to the top side of the contact board. Apply the protective coating over the entire length (10) of the contact board from the ESD protective barrier tape edge (8) to the contact board edge.

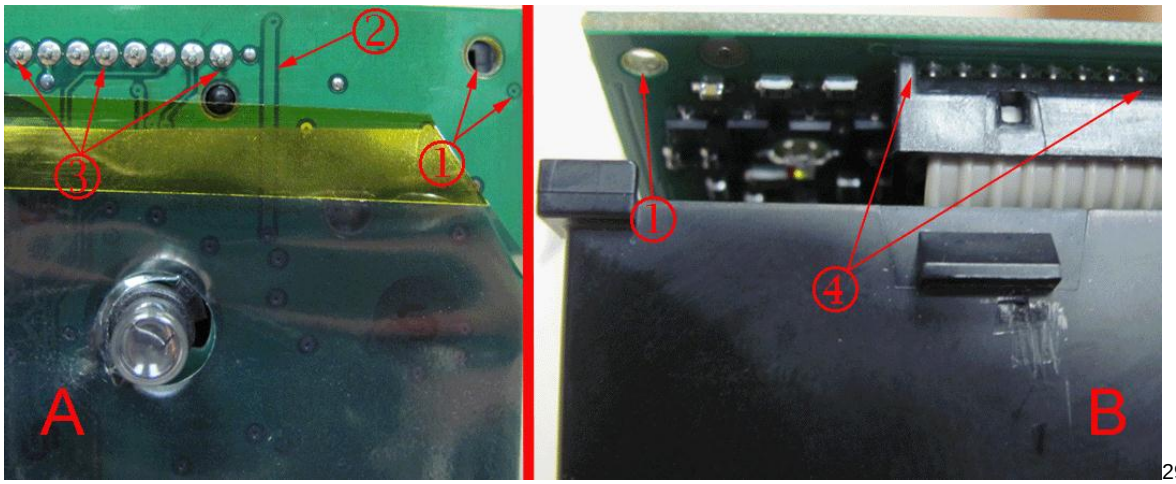

2917380

Top "A" and bottom "B" views of the contact board include examples of connector (4), connector pins (3), traces (2), and vias (1).

10. Ensure the protective coating covers the connector pins, traces and vias (holes) in the application area of the contact board.

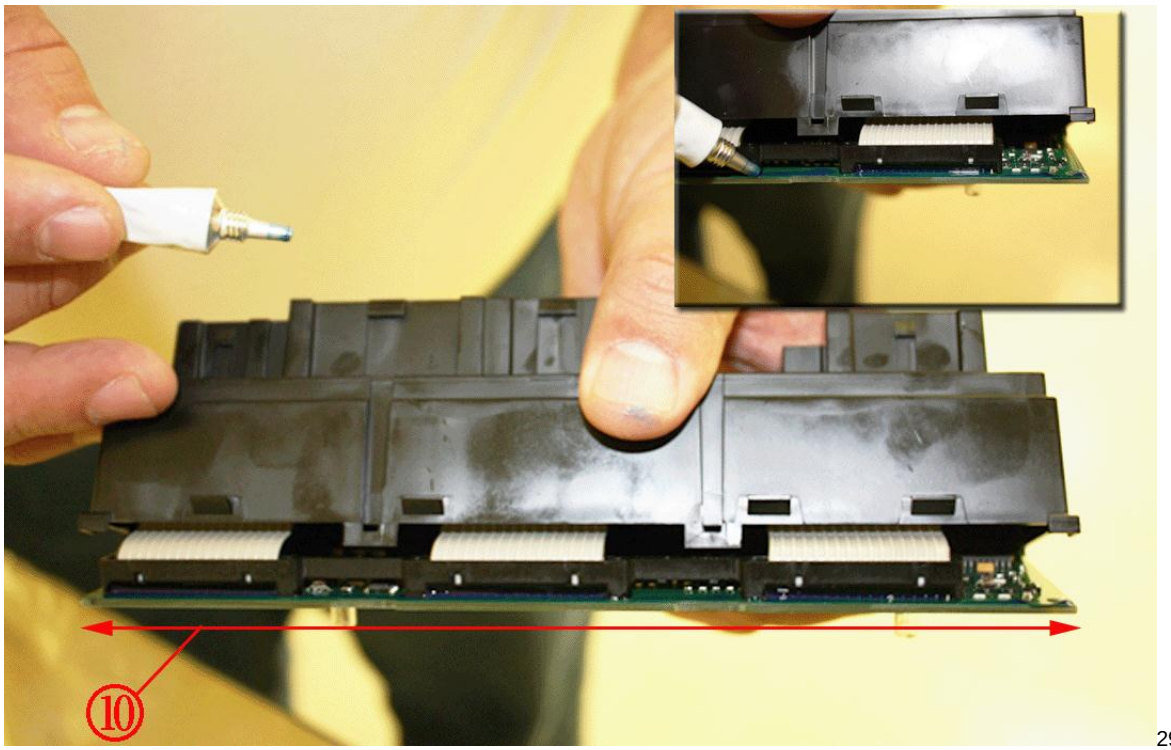

2917382

11. Apply the protective coating to the bottom side of the contact board. Apply the protective coating over the entire length (10) of the contact board.

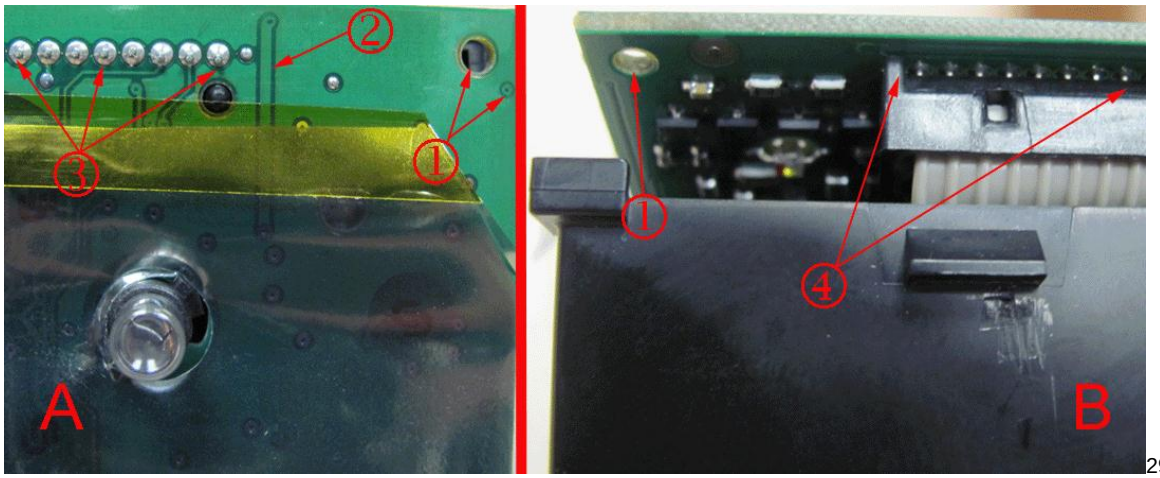

2917380

Top "A" and bottom "B" views of the contact board include examples of connector (4), connector pins (3), traces (2), and vias (1).

12. Ensure the protective coating covers the connector pins, traces and vias (holes) in the application area of the contact board.

Caution: *The cure time for the material is 1 hour. To avoid part damage, do NOT proceed to Step 13 until the material has cured for 1 hour.*

13. Wait 60 minutes to allow the liquid material to cure to a "tacky" state.
14. Remove ESD protective barrier from the contact board of the door module.

2917385

15. Insert the Mylar Kapton® gasket (10) to the inside surface covering the open cutouts of the door lock and side window switch membrane.

2917388

16. Assemble the door module and door lock and side window switch.

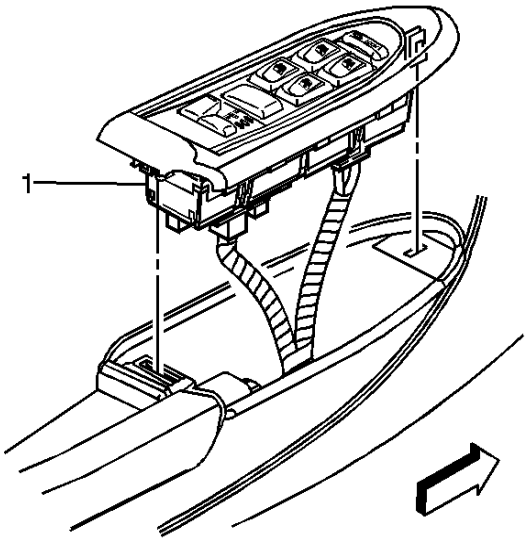

690976

Note: Do not program the door module after installing the driver side door lock and side window switch into the door.

17. Install the driver side door lock and side window switch into the door. Refer to *Door Lock and Side Window Switch Replacement - Driver Side* in SI.
18. Perform a functional test on the driver side door lock and side window switch. Test all switch functions to ensure the driver side door lock and side window switch functions as designed. Replace the driver side door lock and side window switch if it fails the functional test. Refer to *Door Lock and Side Window Switch Replacement - Driver Side* in SI.

Door Module Repair Tips

To ensure the door module repair is completed correctly, refer to the following repair tips.

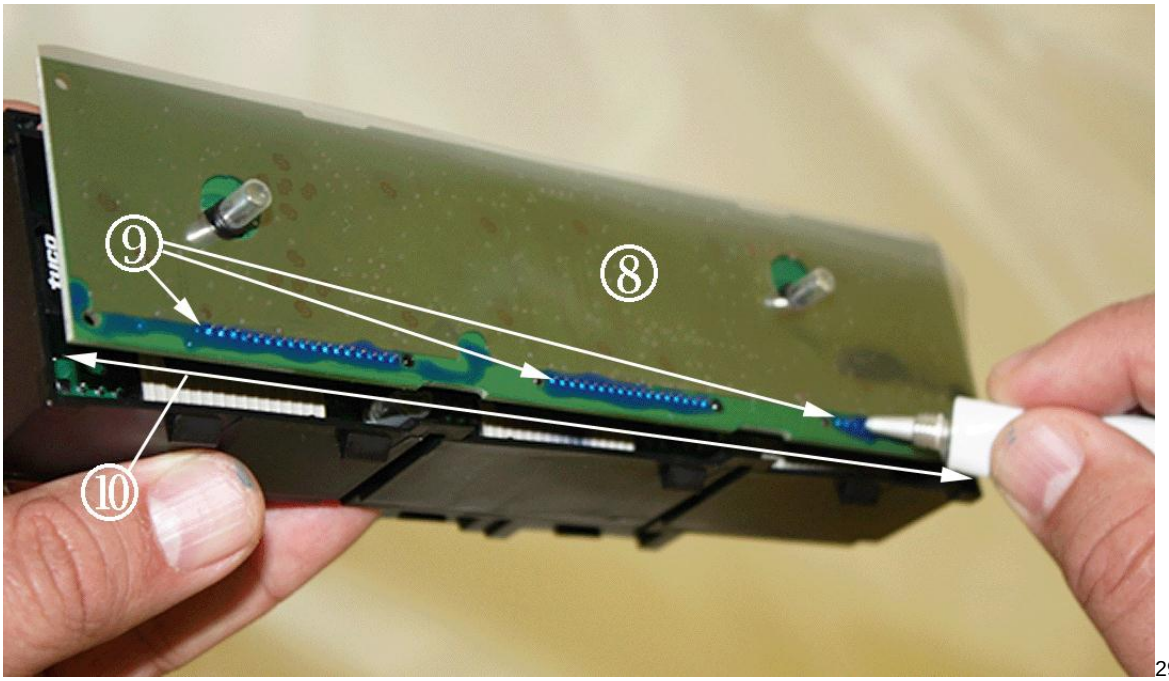

2917379

- Ensure the protective coating covers the connector pins, traces and vias (holes) in the application area of the contact board. Apply the protective coating to the top side of the contact board. Apply the protective coating over the entire length (10) of the contact board from the ESD protective barrier tape edge (8) to the contact board edge.

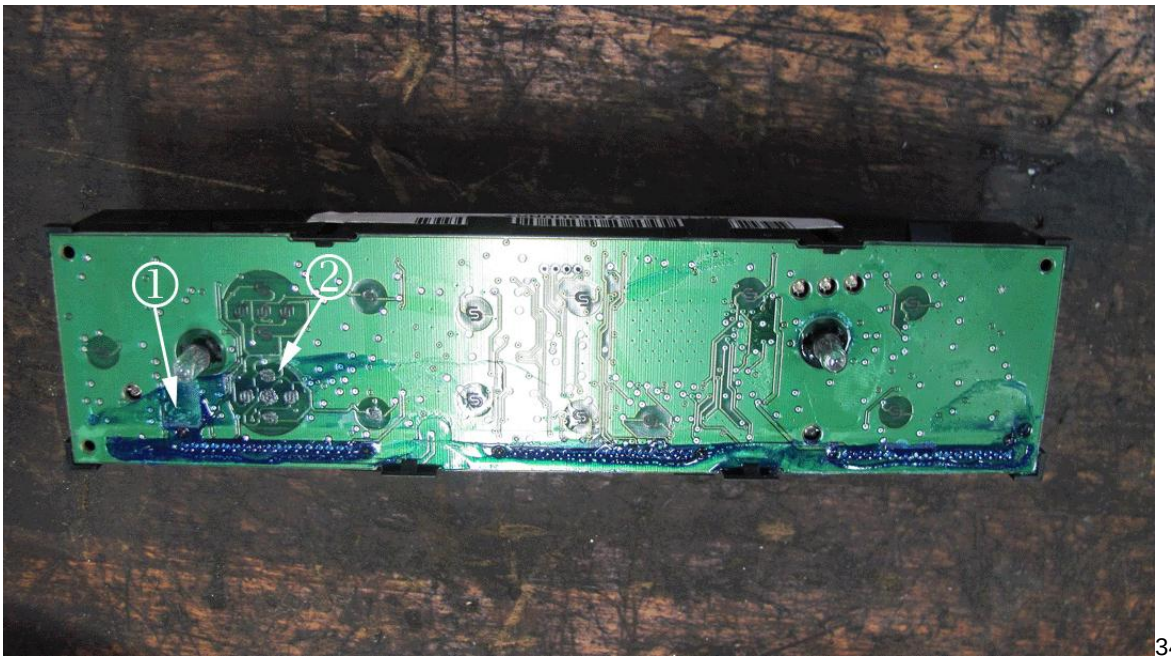

3462471

- Do NOT apply the protective coating to the contact board (1) and switch contact points (2) underneath the ESD protective barrier.

3462477

- The cure time for the protective coating is 1 hour. To avoid part damage, do NOT remove the ESD protective barrier (1) or assemble the door module until the protective coating has cured.
- Remove the ESD protective barrier (1) from the contact board BEFORE assembling the door module. Do NOT assemble the door module with the ESD protective barrier on the contact board.

CUSTOMER REIMBURSEMENT – For US

Customer requests for reimbursement of previously paid repairs for the recall condition are to be submitted to the dealer by February 28, 2014, unless otherwise specified by state law. If this is not convenient for the customer, they may mail the completed Customer Reimbursement Request Form and all required documents to the GM Customer Assistance Center.

All reasonable and customary costs to correct the condition described in this bulletin should be considered for reimbursement. Any questions or concerns should be reviewed with your District Service Manager – Aftersales prior to processing the request.

When a customer requests reimbursement, they must provide the following:

- A completed Customer Reimbursement Request Form. This form is mailed to the customer or can be obtained through GM GlobalConnect.
- The name and address of the person who paid for the repair.
- Paid receipt confirming the amount of the repair expense, a description of the repair, and the person or entity performing the repair.

IMPORTANT: GM requires dealers to approve or deny a reimbursement request within 30 days of receipt. If a reimbursement request is approved, the dealer should immediately issue a check to the customer and submit an appropriate warranty transaction for the incurred expense. If a reimbursement request is denied, the dealer MUST provide the customer with a clear and concise explanation, in writing, as to why the request was denied. The bottom

portion of the Customer Reimbursement Request Form may be used for this purpose. If the denial was due to missing documents, the customer can resubmit the request when the missing documents are obtained, as long as it is still within the allowed reimbursement period.

Warranty transactions for customer reimbursement of previously paid repairs are to be submitted as required by GM Global Warranty Management. Additional information can also be found in Warranty Administration Bulletin 11-00-89-004.

CUSTOMER REIMBURSEMENT - For Canada and Export

Customer requests for reimbursement of previously paid repairs to correct the condition described in this bulletin are to be submitted to the dealer prior to or by February 28, 2014.

When a customer requests reimbursement, they must provide the following:

- Proof of ownership at time of repair.
- Original paid receipt confirming the amount of unreimbursed repair expense(s) (including Service Contract deductibles), a description of the repair, and the person or entity performing the repair.

All reasonable and customary costs to correct the condition described in this bulletin should be considered for reimbursement. Any questions or concerns should be reviewed with your GM representative prior to processing the request.

WARRANTY TRANSACTION INFORMATION

Submit a transaction using the table below.

Labor Code	Description	Labor Time	Net Item
V2739	Functional Test & Verify Part Number – No Further Action Req'd	0.3	N/A
V2740	Functional Test & Install Protective Coating to Driver Side Door Lock Window Switch	0.7	N/A
V2736	Functional Test & Door Lock & Side Window Switch Replacement (inc. programming)	0.5	N/A
V2737*	Customer Reimbursement Approved – Not for Saab Use	0.2	**
V2738	Customer Reimbursement Denied - For US dealers only	0.1	N/A

* Customer reimbursement will NOT close this recall. The service procedure contained in this bulletin must still be performed.

** The amount identified in “Net Item” should represent the dollar amount reimbursed to the customer.

CUSTOMER NOTIFICATION – For US and Canada

General Motors will notify customers of this recall on their vehicle (see copy of customer letter included with this bulletin).

CUSTOMER NOTIFICATION – For Export

Letters will be sent to known owners of record located within areas covered by the US National Traffic and Motor Vehicle Safety Act. For owners outside these areas, dealers should notify customers using the attached sample letter.

DEALER RECALL RESPONSIBILITY – For US and Export (US States, Territories, and Possessions)

It is a violation of Federal law for a dealer to deliver a new motor vehicle or any new or used item of motor vehicle equipment (including a tire) covered by this notification under a sale or lease until the defect or noncompliance is remedied.

The US National Traffic and Motor Vehicle Safety Act provides that each vehicle that is subject to a recall of this type must be adequately repaired within a reasonable time after the customer has tendered it for repair. A failure to repair within sixty days after tender of a vehicle is prima facie evidence of failure to repair within a reasonable time. If the condition is not adequately repaired within a reasonable time, the customer may be entitled to an identical or reasonably equivalent vehicle at no charge or to a refund of the purchase price less a reasonable allowance for depreciation. To avoid having to provide these burdensome remedies, every effort must be made to promptly schedule an appointment with each customer and to repair their vehicle as soon as possible. In the recall notification letters, customers are told how to contact the US National Highway Traffic Safety Administration if the recall is not completed within a reasonable time.

DEALER RECALL RESPONSIBILITY – All

All unsold new vehicles in dealers' possession and subject to this recall must be held and inspected/repaired per the service procedure of this recall bulletin before customers take possession of these vehicles.

Dealers are to service all vehicles subject to this recall at no charge to customers, regardless of mileage, age of vehicle, or ownership, from this time forward.

Customers who have recently purchased vehicles sold from your vehicle inventory, and for which there is no customer information indicated on the dealer listing, are to be contacted by the dealer. Arrangements are to be made to make the required correction according to the instructions contained in this bulletin. A copy of the customer letter is provided in this bulletin for your use in contacting customers. Recall follow-up cards should not be used for this purpose, since the customer may not as yet have received the notification letter.

In summary, whenever a vehicle subject to this recall enters your vehicle inventory, or is in your dealership for service in the future, you must take the steps necessary to be sure the recall correction has been made before selling or releasing the vehicle.

GM bulletins are intended for use by professional technicians, NOT a "do-it-yourselfer". They are written to inform these technicians of conditions that may occur on some vehicles, or to provide information that could assist in the proper service of a vehicle. Properly trained technicians have the tools, equipment, safety instructions, and know-how to do a job properly and safely. If a condition is described, DO NOT assume that the bulletin applies to your vehicle, or that your vehicle will have that condition. See your dealer for information on whether your vehicle may benefit from the information.

We Support Voluntary Technician Certification

Dear General Motors Customer:

This notice is sent to you in accordance with the requirements of the National Traffic and Motor Vehicle Safety Act.

General Motors has decided that a defect, which relates to motor vehicle safety, exists in certain 2006 model year Chevrolet TrailBlazer EXT and GMC Envoy XL; 2006-2007 model year Buick Rainier, Chevrolet TrailBlazer, and GMC Envoy vehicles. As a result, GM is conducting a safety recall. We apologize for this inconvenience. However, we are concerned about your safety and continued satisfaction with our products.

IMPORTANT

- Your vehicle is involved in safety recall 12180.
- Schedule an appointment with your GM dealer.
- This service will be performed for you at **no charge**.

Why is your vehicle being recalled?

If fluid, such as melted snow containing road salt, enters the driver's door module, it may cause corrosion that could result in a short in the circuit board. A short may cause the power door lock and power window switches to function intermittently or may stop working. A short may cause overheating, which could melt components of the door module, producing odor, smoke, or a fire. Additionally, the windows may raise or lower themselves, without user input. These conditions may occur even with the vehicle parked and the key removed. It is advised that you park the vehicle outdoors until it has been remedied.

What will we do?

Your GM dealer will test the driver's window and door lock switches for proper operation. If the switches function properly, a protective coating will be applied to the door module. If the switches do not function properly, a new door module will be installed.

This service will be performed for you at **no charge**. Because of service scheduling requirements, it is likely that your dealer will need your vehicle longer than the actual service correction time of approximately 20 minutes to 1 hour and 45 minutes, depending on the repair required.

What should you do?

You should contact your GM dealer to arrange a service appointment as soon as possible.

Did you already pay for this repair?

If you have paid for repairs for the recall condition, please complete the enclosed form and present it to your dealer with all required documents. Working with your dealer will expedite your request, however, if this is not convenient, you may mail the completed form and all required documents to Reimbursement Department, PO Box 33170, Detroit, MI 48232-5170. The completed form and required documents must be presented to your dealer or received by the Reimbursement Department by February 28, 2014, unless state law

specifies a longer reimbursement period. Because you have already had this condition repaired, you do not need to take your vehicle to your dealer for this recall. Even though you may have already had this condition corrected, you will still need to take your vehicle to your dealer for an inspection.

Do you have questions?

If you have questions or concerns that your dealer is unable to resolve, please contact the appropriate Customer Assistance Center at the number listed below.

Division	Number	Text Telephones (TTY)
Buick	1-800-521-7300	1-800-832-8425
Chevrolet	1-800-222-1020	1-800-833-2438
GMC	1-800-462-8782	1-888-889-2438
Guam	65-6267-1752	
Puerto Rico – English	1-800-496-9992	
Puerto Rico – Español	1-800-496-9993	
Virgin Islands	1-800-496-9994	

If after contacting your dealer and the Customer Assistance Center, you are still not satisfied we have done our best to remedy this condition without charge and within a reasonable time, you may wish to write the Administrator, National Highway Traffic Safety Administration, 1200 New Jersey Avenue, SE, Washington, DC 20590, or call the toll-free Vehicle Safety Hotline at 1.888.327.4236 (TTY 1.800.424.9153), or go to http://www.safercar.gov. The National Highway Traffic Safety Administration Campaign ID Number for this recall is 12V406.

Federal regulation requires that any vehicle lessor receiving this recall notice must forward a copy of this notice to the lessee within ten days.

Jim Moloney
General Director,
Customer and Relationship Services

Enclosure
GM Recall #12180