Applies To: **2003 3.2CL** – From VIN 19UYA4…3A000050 thru 19UYA4…3A016337
2002 3.2TL – From VIN 19UUA5…2A000008 thru 19UUA5…2A061706
2003 3.2TL – From VIN 19UUA5…3A000003 thru 19UUA5…3A093968

May 20, 2011

Safety Recall: Replacement Driver's Airbag Inflator Can Be Over-Pressurized

(Supersedes 10-026, dated May 17, 2011, to revise the information marked by the black bars)

REVISION SUMMARY

The INSPECTION PROCEDURE was changed into an INSPECTION PROCEDURE and REPAIR PROCEDURE A.

BACKGROUND

A small number of defective airbags were sold as replacement parts to replace deployed or damaged airbags.

A manufacturing error can produce over-pressurization of some replacement driver's (front) airbag inflators during airbag deployment. If an affected airbag deploys, the increased internal pressure may cause the inflator casing to rupture. Metal fragments could pass through the airbag cushion material, possibly causing an injury or fatality to vehicle occupants.

CLIENT NOTIFICATION

All owners of potentially affected vehicles will be sent a notification of this campaign. An example of the client notification is included at the end of this service bulletin.

To verify vehicle eligibility, check for at least one of these items:

- The client has a notification letter.
- The vehicle is shown as eligible on a VIN status inquiry.

In addition, check for a punch mark below the fifth character of the engine compartment VIN. A punch mark in that location means this campaign has already been completed.

Some vehicles affected by this campaign may be in your used vehicle inventory. As a matter of federal law, these vehicles **must** be repaired before they are sold.

Should a dealership sell an unrepaired vehicle that subsequently causes an injury or damage because of the recalled item, the dealership will be solely responsible to the damaged party, and will be required to defend and indemnify American Honda for any resulting claims. To see if a vehicle in inventory is affected by this campaign, do a VIN status inquiry before selling it.

CORRECTIVE ACTION

Most vehicles will require an inspection only; remove the driver's airbag, and check the airbag serial number on the iN (Interactive Network), then reinstall it with new Torx bolts. If needed, install a driver's airbag inflator kit, then return the defective, **undeployed** inflator to its supplier, **ideally within 48 hours of the repair**.

NOTE: If the defective, undeployed inflator is not returned, the warranty claim for that vehicle will be charged back to your dealership.

PARTS INFORMATION

NOTE:

- There are a very small number of airbags needing replacement compared to the large number of vehicles will require inspection. Order the airbag inflator kit only after finding an airbag that needs a new inflator.
- Most vehicles only need the inspection that requires using new Torx bolts to reinstall the airbag.
- Always use new Torx bolts to reinstall the airbags as the bolts are coated with threadlock to make sure they do not come loose.

Torx Airbag Bolts: P/N 90134-S04-A81
(Each bag comes with two bolts, enough to reinstall one airbag)

Driver's Airbag Inflator Kit: P/N 04770-S5A-308*
Includes inflator with wire harness, locknuts (4), felt tape, felt washers (4), Torx bolts (2), and shipping instructions.

NOTE: The inflator kit box must be used to return the old inflator to its supplier. Be careful not to damage the inflator kit box.

*The kit contains FedEx Ground shipping documents and instructions for the airbag inflator. If you are a dealer in Alaska or Hawaii, call the WPI administrative office at **937-642-2737** for FedEx Air shipping documents and instructions; do not use the documentation included in the airbag inflator kit.

© 2011 American Honda Motor Co., Inc. – All Rights Reserved

Skill Level
R
REPAIR

CLIENT INFORMATION: The information in this bulletin is intended for use only by skilled technicians who have the proper tools, equipment, and training to correctly and safely maintain your vehicle. These procedures should not be attempted by "do-it-yourselfers," and you should not assume this bulletin applies to your vehicle, or that your vehicle has the condition described. To determine whether this information applies, contact an authorized Acura automobile dealer.

WARRANTY CLAIM INFORMATION

NOTE:

- If the airbag inflator is replaced, to avoid non-payment of warranty claims, the 13-digit serial number on the box of the new airbag inflator must be entered in the **Diagnostic Trouble Codes** field on each warranty claim. For more information, refer to step 1 of REPAIR PROCEDURE B.
- To avoid a warranty claim being charged back to your dealership, the defective, undeployed inflator must be returned to its supplier. For more information, refer to INFLATOR PACKING AND GROUND SHIPPING INSTRUCTIONS: DEALERS IN THE 48 CONTIGUOUS STATES or INFLATOR PACKING AND AIR SHIPPING INSTRUCTIONS: DEALERS IN ALASKA AND HAWAII.

OP#	Description	FRT
7525A5	Remove the driver's airbag, check the inflator serial number, and reinstall the original airbag.	0.3
7525A6	Remove the driver's airbag, check the inflator serial number, and REPLACE the airbag inflator.	0.5

Failed Part:	P/N 06770-S84-A11ZA
Defect Code:	5US00
Symptom Code:	R5500
Skill Level:	Repair Technician

INSPECTION PROCEDURE

1. Remove the driver's airbag:
   - Refer to page 23-219 of the *1999–2003 3.2TL Service Manual*, or
   - Refer to page 23-204 of the *2001–2003 3.2CL Service Manual*, or
   - Online, enter keywords **DRIVER AIR**, and select **Driver's Airbag Replacement** from the list.
2. Locate the serial number on the bottom of the airbag. Make sure you also have the VIN, then go to the iN:
   - Click on **Service**.
   - Click on **Service Bay**.
   - Click on **Airbag inflator recall SB 10-026**.
   - Enter the VIN and the airbag serial number.

   The iN will indicate if the airbag is OK or if the airbag inflator must be replaced. If the airbag is OK, go to REPAIR PROCEDURE A. If the airbag must be replaced, go to REPAIR PROCEDURE B.

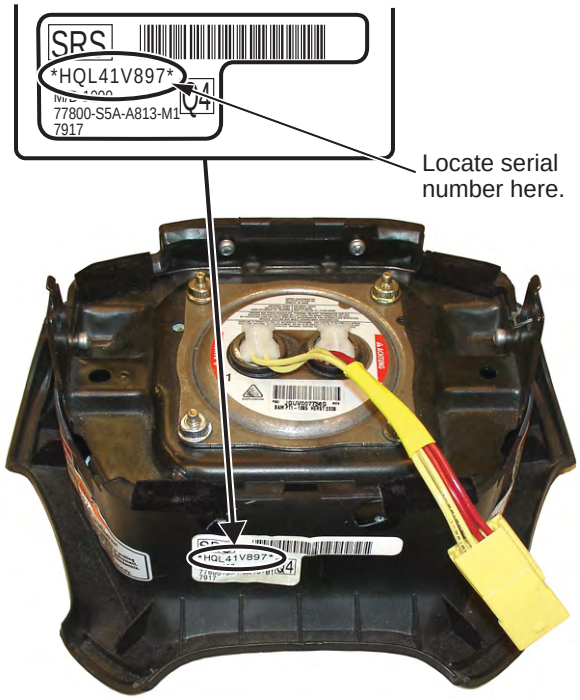

REPAIR PROCEDURE A

1. Reinstall the airbag using new Torx bolts, and torque the bolts to **10 N·m (7.0 lb-ft)**.
2. Center-punch a completion mark below the fifth character of the engine compartment VIN:

19UXXXXXXXXXXXXX

Center-punch here.

REPAIR PROCEDURE B

NOTE: Be careful not to damage any parts when replacing the inflator, and follow the procedure exactly.

1. Write down the 13-digit serial number located on the right side of the new airbag inflator's box. For the warranty claim to be paid, your warranty clerk must enter this 13-digit serial number in the **Diagnostic Trouble Codes** field on the warranty claim.

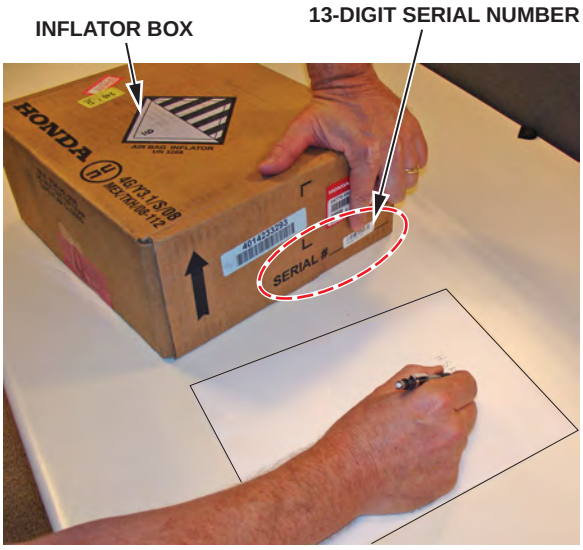

2. Place the airbag, face down, on a clean shop towel.

3. Remove the four horn plate mounting bolts, the mounting bolt felt washers, and the horn plate. The felt washers will not be reused.

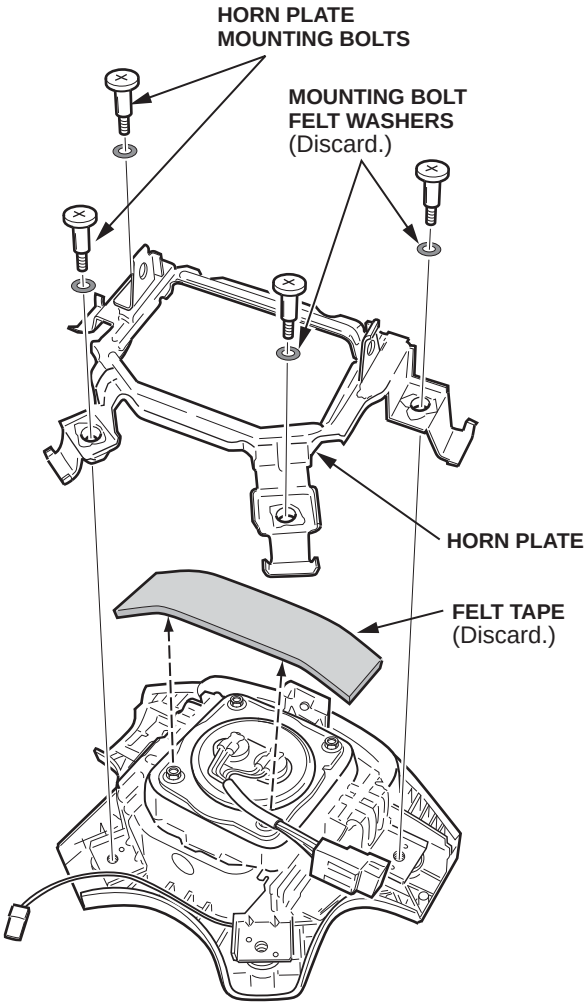

4. Remove and discard the felt tape covering the lower two inflator locknuts.

5. Using needle-nose Vise Grips, remove the four locknuts from the inflator. The locknuts will not be reused.

   NOTE: Do not remove the inflator from the airbag until you complete step 6.

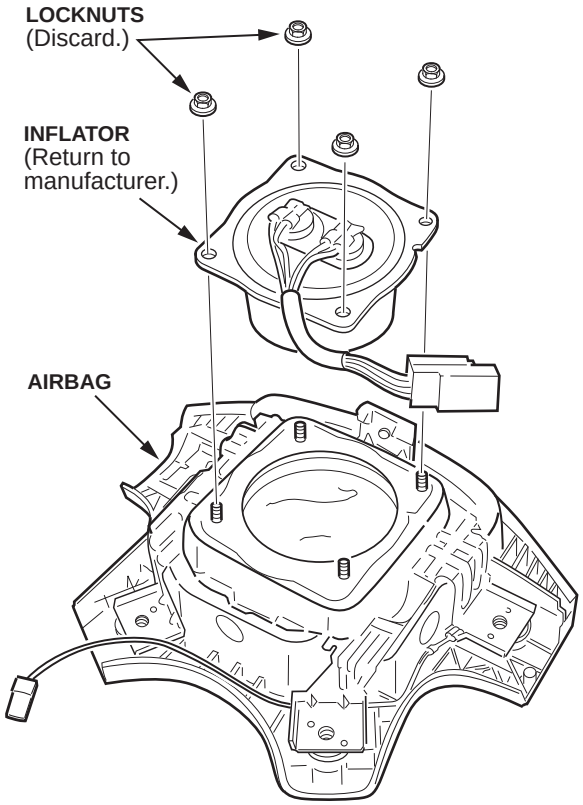

6. Use shop air to clean any debris that may be on the inflator, then remove the inflator from the airbag.

   NOTE:
   - Do not allow any debris to enter the inflator opening in the airbag.
   - **Do not deploy the inflator.** The inflator must be returned to its supplier in the box the new inflator came in (see INFLATOR PACKING AND GROUND SHIPPING INSTRUCTIONS: DEALERS IN THE 48 CONTIGUOUS STATES or INFLATOR PACKING AND AIR SHIPPING INSTRUCTIONS: DEALERS IN ALASKA AND HAWAII).

7. Turn over the airbag (inflator side down), and shake it to remove any debris from the inflator opening.

8. Install the new inflator in the airbag with new locknuts. Torque the locknuts to **3.9 N·m (2.8 lb-ft, 34 lb-in).**

   NOTE: The new inflator is slightly taller than the original inflator, but they are still interchangeable.

9. Cover the lower two inflator locknuts with new felt tape.

10. Reinstall the horn plate with new felt washers on its mounting bolts. Torque the mounting bolts to **3.4 N·m (2.5 lb-ft, 30 lb-in)**, then make sure the horn plate moves freely.

11. Reinstall the driver's airbag using new Torx bolts:
    - Refer to the appropriate service manual, or
    - Online, enter keywords **DRIVER AIR**, and select **Driver's Airbag Replacement** from the list.

12. Center-punch a completion mark below the fifth character of the engine compartment VIN:

    19UXXXXXXXXXXXXX

    Center-punch here.

13. Give your warranty clerk the 13-digit inflator serial number you wrote down in step 1. For the warranty claim to be paid, your warranty clerk must enter the appropriate 13-digit serial number in the **Diagnostic Trouble Codes** field on each warranty claim.

INFLATOR PACKING AND GROUND SHIPPING INSTRUCTIONS: DEALERS IN THE 48 CONTIGUOUS STATES

NOTE:
- Do not deploy the defective inflator. Claims for deployed inflators will be charged back to your dealership.
- There is a 48-hour return shipment objective for the inflator.
- The following ground shipping instructions are also in the return shipping box (the box the new inflator came in) from kit P/N 04770-S5A-308. If you're a dealer in Alaska or Hawaii, call the WPI administrative office at **937-642-2737** for FedEx Air shipping documents and instructions.

1. Carefully insert the defective inflator into the round opening in the return shipping box (the box that the new inflator came in). Also place a copy of the repair order in the box.

2. Close the top flap on the box, then double-tape the the box closed with 2-inch clear packing tape on the entire front seam and the side seams. Press down on the tape for good adhesion.

3. Fill out the FedEx Ground paperwork, and handle it as indicated below:
   - OP-950 Hazardous Materials Certification form:
     - At the top, fill in the shipper name, address, and date.
     - At the bottom, sign your name on the signature line.
     - List the Tracking ID on the right side column of both copies. (The 15-digit Tracking ID is found on the PRP Shipping Label beneath the large bar code to the right of the parenthesis.)
     - Keep one copy for dealer records and retain it for 1 year; give the second copy to the FedEx Ground driver.
   - FedEx Ground PRP Shipping Label:
     - Complete all fields in the upper section of the label. (The RA number is not required.)
     - Review the instructions on the back and, when the shipment is ready, call for FedEx Ground pick up for business locations at **888-777-6040**.
   - OP-900 Hazardous Materials form:
     - This form requires no further completion; attach the six-part label to the box.
4. Prepare the box and the labels:
   - Remove or black-out any old shipping labels, including the original bar code. Do not remove or black-out any of the hazard marks or labels.
   - Remove the adhesive backing from the PRP and the OP-900 labels, and attach them firmly to the box. Do not cover any of the hazard marks or labels.

   NOTE: Multiple boxes cannot be bundled together.
5. Prior to shipment, make sure that all steps have been properly completed. All boxes must be prepared in accordance with all U.S. Department of Transportation (DOT) and FedEx Ground requirements. Incomplete or missing information will result in return to sender and delay of return credit.
6. Retain your copy of the OP-950 Hazardous Materials Certification form for at least 1 year. This is required per DOT regulations and for your proof of shipment via Tracking ID.

INFLATOR PACKING AND AIR SHIPPING INSTRUCTIONS: DEALERS IN ALASKA AND HAWAII

NOTE:

- Do not deploy the defective inflator. Claims for deployed inflators will be charged back to your dealership.
- There is a 48-hour return shipment objective for the inflator.
- Dealers in Alaska and Hawaii require FedEx Air shipping documents and instructions. Call the WPI administrative office at **937-642-2737** for the documents and instructions.

1. Carefully insert the defective inflator into the round opening in the return shipping box (the box that the new inflator came in).
2. Close the top flap on the box, then double-tape the the box closed with 2-inch clear packing tape on the entire front seam and the side seams. Press down on the tape for good adhesion.
3. Fill in this information on the FedEx airbill:
   - In the **From** section, add your name, address, and telephone number.
   - In the **Your Internal Billing Reference** section, add your 6-digit dealer number and the VIN.
   - In the **Does this shipment contain dangerous goods?** section, check the box next to **Yes per attached Shipper's Declaration**.
   - In the **Total Declared Value** section, do not add an amount.
4. Fill in this information on the SHIPPER'S DECLARATION FOR DANGEROUS GOODS form:

   NOTE: If not already done, cross out the words CARGO AIRCRAFT ONLY in the TRANSPORTATION DETAILS box at the top left of the form. The shipper may reject your shipment if CARGO AIRCRAFT ONLY is not crossed out.
   - In the **Shipper** section, add your name and address.
   - In the **Air Waybill No.** section, add the 12-digit tracking number from the top of the airbill.
   - In the **Page of Pages** section, add 1 of 1.
   - In the lower right corner of the form, print your name and title, your city, state, and the shipment date. Then add your signature.
5. For your records, keep one copy of the shipper's declaration and the sender's copy of the airbill. Insert the completed shipper's declaration and the airbill into an adhesive FedEx envelope, then attach the envelope to the box, most likely on the bottom. Do not cover any of the hazard markings or labels on the box.

6. Attach a **From** label (your dealership address) and a **To** label (TK Holdings, Inc., as listed on the airbill) to the outside of the box. Do not cover any of the hazard markings or labels on the box.
7. Before shipment, make sure steps 1 thru 6 have been completed. Incomplete or missing information may cause the box to be returned to you.

   NOTE: You (the shipper) are responsible for proper packing and document completion before shipping this box. The DOT (U.S. Department of Transportation) *will* impose substantial fines and/or penalties on the shipper (you) if the packaging, labeling, or documentation is not properly prepared. The person signing the document must be trained, and the training records must be on file at your place of business. Retain all documents for at least 2 years.

Example of Client Letter

May 2011

IMPORTANT SAFETY RECALL NOTICE

Dear Acura Owner:

This notice is sent to you in accordance with the requirements of the National Traffic and Motor Vehicle Safety Act.

What is the reason for this notice?
Acura has decided that a defect which relates to motor vehicle safety exists in certain 2002–2003 model year 3.2TL vehicles and 2003 model year 3.2CL vehicles that have had the original factory-installed driver's front airbag module replaced. In some vehicles, the replacement driver's airbag inflator could produce excessive internal pressure. If an affected airbag deploys, the increased internal pressure may cause the inflator to rupture. Metal fragments could pass through the airbag cushion material possibly causing injury or death to vehicle occupants.

What should you do?
If you are the original owner of the vehicle and you are certain the driver's airbag has never been serviced or replaced, please complete, sign and return the enclosed postage-paid Information Change Card. We will update our records and you will not receive future reminders for this recall.

If you are not the original owner of the vehicle, the driver's airbag has been replaced, or you are unsure, please immediately call any authorized Acura dealer and make an appointment to have your vehicle inspected. The dealer will inspect and, if necessary, replace the driver's airbag module. This work will be done free of charge. Please plan to leave your vehicle for half a day.

Who to contact if you experience problems
If you are not satisfied with the service you receive from your Acura dealer, you may write to:

American Honda Motor Co., Inc.
Acura Client Relations
Mail Stop 500-2N-7E
1919 Torrance Blvd.
Torrance, CA 90501-2746

If you believe that American Honda or the dealer has failed or is unable to remedy the defect in your vehicle, without charge, within a reasonable period of time (60 days from the date you first contact the dealer for a repair appointment), you may submit a complaint to:

Administrator
National Highway Traffic Safety Administration
1200 New Jersey Ave., SE
Washington, DC 20590

Or call the toll-free Safety Hotline at 888-327-4236 (TTY 800-424-9153), or go to *http://www.safercar.gov*.

What to do if you no longer own this vehicle
Our records show that you are the current owner or lessee of a 2002–2003 3.2TL or 2003 3.2CL involved in this campaign. If this is not the case, or the name/address information is not correct, please complete, sign and return the enclosed, postage-paid Information Change Card. We will then update our records.

Lessor information
Federal law requires that any vehicle lessor receiving this recall notice must forward a copy of this notice to the lessee within 10 days.

If you have questions
If you have any questions about this notice, or need assistance with locating an Acura dealer, please call Acura Client Relations at 800-382-2238, and select option 4.

We apologize for any inconvenience this campaign may cause you.

Sincerely,

American Honda Motor Co., Inc.
Acura Automobile Division