06E-069
(10 pgs.)

Safety Defect and Noncompliance Report Guide for Equipment
**PART 573 Report**

On July 28, 2006, Challenger Lifts, Inc., decided that a defect which relates to motor vehicle safety exists in the item of motor vehicle equipment listed below, and is furnishing notification to the National Highway Traffic Safety Administration in accordance with 49 CFR Part 573 Defect and Noncompliance Reports.

Date this report was prepared: August 1, 2006

Furnish the manufacturer's identification code for this recall (if applicable): not assigned yet

1. Identify the full corporate name of the fabricating manufacturer/brand name/trademark owner of the recalled item of equipment. If the recalled item of equipment is imported, provide the name and mailing address of the designated agent as prescribed by 49 U.S.C. §30164.

Challenger Lifts, Inc.

200 Cabel Street, P.O. Box 3944

Louisville, KY 40201-3944

Identify the corporate official, by name and title, whom the agency should contact with respect to this recall.

Jerome (Jerry) Lentz

CFO

Telephone Number: (502) 625-0700 Fax No.: (502) 587-1933

Name and Title of Person who prepared this report.

Jerome (Jerry) Lentz

CFO

Signed: Jerome Lentz

RECEIVED
2006 AUG -4 P 2:33
OFFICE OF DEFECTS INVESTIGATION

## I. Identify the Recalled Items of Equipment

2. Identify the Items of Equipment Involved in this Recall, *for each make and model or applicable item of equipment product line (provide illustrations or photographs as necessary to describe the item of equipment), provide:*

Generic name of the item: automotive lift

Make: Challenger Model: X10

Part Number: _____ Size: _____

Function: 2-post, surface mounted lift for vehicle repair facilities

Other information which characterizes/distinguishes the items of equipment to be recalled:

See photo

Make: _____ Model: _____

Part Number: _____ Size: _____

Function: _____

Other information which characterizes/distinguishes the items of equipment to be recalled:

Make: _____ Model: _____

Part Number: _____ Size: _____

Function: _____

Model Years Involved: _____

Other information which characterizes/distinguishes the items of equipment to be recalled:

Make: _____ Model: _____

Part Number: _____ Size: _____

Function: _____

Other information which characterizes/distinguishes the items of equipment to be recalled:

_____

_____

## II. Identifying the Recall Population

3. Furnish the total number of items of equipment recalled potentially containing the defect or noncompliance.

| Model | Year | Number of Items Potentially Involved |
|---|---|---|
| X10 Lift | September 2005 to August 1, 2006 | 1113 |
| | | |
| | | |
| | | |
| | | |
| | | |

Total Number Potentially Affected by the Recall: 1113

4. Furnish the approximate percentage of the total number of items of equipment estimated to actually contain the defect or noncompliance: 100%

Identify and describe how the recall population was determined--in particular how the recalled models were selected and the basis for the beginning and final dates of manufacture of the recalled items of equipment: Challenger started selling the Model X10 lift in September 2005, so the population of affected units is all models made or sold before August 1, 2006.

## III. Describe the Defect or Noncompliance

5. Describe the defect or noncompliance. The description should address the nature and physical location of the defect or noncompliance. Illustrations should be provided as appropriate.

Challenger Lifts recently learned of the potential for failure of the weld connecting the lift arm to the pivot bracket on all Model X10, two post, surface mounted automotive lifts.

Describe the cause(s) of the defect or noncompliance condition.

Incorrect positioning of the load—for example, placing a vehicle too far back on the lift—can significantly exceed an individual lift arm's rated capacity even if the total vehicle weight is less than 10,000 lbs.

Describe the consequence(s) of the defect or noncompliance condition.

If an overload occurs, a lift arm weld might break suddenly and cause serious injury or death. Until new lift arms are installed, do not use the Model X10 to lift more than 7,000 lbs.

Identify any warning which can (a) precede or (b) occur.

Although dimpling of the lift arm might occur before failure, insufficient data exists to conclude that this is a reliable indicator.

If the defect or noncompliance is in a component or assembly purchased from a supplier, identify the supplier by corporate name and address.

| | | |
|---|---|---|
| Ningbo Qingyuan Machinery, Inc. | and | Fenhua Nanfang Machinofacture Co LTD |
| 188 Tonghui Road, Section C | | Add:Shangtian Town, |
| Jiangbei Investment & Development Zone | | Fenhua, Ningbo, China |
| Ningbo, Zhejiang Province, China | | |

Identify the name and title of the chief executive officer or knowledgeable representative of the supplier:

Kong Zhao Geng, President

## IV. Provide the Chronology in Determining the Defect/Noncompliance

*If the recall is for a defect, complete item 6, otherwise item 7.*

6. With respect to a defect, furnish a chronological summary (including dates) of all the principle events that were the basis for the determination of the defect. The summary should

include, but not be limited to, the number of reports, accidents, injuries, fatalities, and warranty claims.

| | |
|---|---|
| August 2005 | Challenger receives first container of Model X10 lift assemblies. |
| September 2005 | Challenger begins shipments of Model X10. |
| May 15, 2006 | Challenger receives notice of accident on May 13, 2006, in Scio, Oregon, involving Model X-10—one personal injury and one fatality. |
| May 16, 2006 | Challenger reports accident to its insurance carrier, Chubb, and carrier retains Mitchell, Lang & Smith, a law firm in Oregon, to investigate the accident on Challenger's behalf. |
| June 2006 | Challenger retains Stites & Harbison PLLC, a law firm in Kentucky, for assistance assessing possible remedial action involving the Model X10 and the legal requirements for any such action. |
| June 30, 2006 | Challenger's gains access to the lift, vehicle, and accident scene for purposes of a technical evaluation. |
| July 13, 2006 | Challenger's draft report concluding that the May 13 accident likely resulted from a combination of misuse and mismanufacturing. |
| July 13-28, 2006 | Challenger evaluates risk and hazards of the Model X10 in light of the May 13 accident, resolves to revise the design used by its Chinese vendors and to execute a corrective action. Identification of product population and design of corrective action begins. |
| July 24, 2006 | Challenger arranges for design change to be independently tested and validated by Intertek.. |
| July 28, 2006 | Challenger advised by legal counsel of Part 573 reporting requirements. |
| August 2, 2006 | Challenger submits Part 573 report. |

7. With respect to a noncompliance, identify and provide the test results or other data (in chronological order and including dates) on which the noncompliance was determined.

On June 30, 2006, Challenger was finally allowed to inspect and take close-up photographs of the Model X10 lift involved in the reported accident in Scio, Oregon. The inspection took place at the accident scene, 36437 Freeman Road. Close examination of the welds on the rear arms of the lift, along with analysis of the witness marks (dimpling) on the top surfaces of the rear arms, suggested an overloaded condition.

On the same day Challenger personnel examined the lift, the Ford F-450 XLT Super Duty, 4WD, crew cab, steel flatbed truck that was on the lift at the time of the accident was

inspected and measured. Vehicle weights (one wheel and one axel at a time) were obtained from other accident investigators. Witness marks identified as being made by the lift's lift pads helped determine the truck's placement on the lift.

In July 2006, engineers at Challenger analyzed the data and information and calculated the load distribution on the Model X10 lift. Metallurgical analysis of the structural members and welds was deferred in the interest of time. Accordingly, a draft report on the data, information, calculations, and conclusions was reviewed by Challenger's management team and attorneys without any substantive changes being made.

The July 2006 report advances these conclusions:

1. Positioning of the 9,400 lb. truck on the Model X10 lift was significantly rearward, causing the center of gravity of the vehicle (front to back) to be only 3½" forward of the rear arm lift pads, making the truck unstable on the lift.

2. As a result of the truck's positioning, the load carried by the lift's two rear arms was more than 10 times the load carried by the lift's front arms.

3. The rear arm welds failed under a load of 4,290 lbs. or 170% of the rated capacity of 2,500 lbs.

4. One of the broken rear welds appeared to be relatively small and inconsistent in thickness; the other weld was thicker but still somewhat inconsistent.

## V. Identify the Remedy

8. Furnish a description of the manufacturer's remedy for the defect or noncompliance. Clearly describe the differences between the recall condition and the remedy.

All Model X10 lifts must be temporarily down-graded to a maximum capacity of 7,000 lbs. (1,750 lbs. each arm) until new lift arms can be installed **free** of charge. Lowering the rated capacity increases the safety factor.

All owners of Model X10 lifts will receive **free** of charge a temporary limit valve to ensure that 7,000 lbs. is not exceeded. A second limit valve, restoring lift capacity to 10,000 lbs., will be provided **free** of charge after new lift arms are installed.

Installation of new lift arms for the Model X10 will begin immediately and take about three months to complete.

Clearly describe the distinguishing characteristics of the remedy component/assembly versus the recalled component/assembly.

Redesign of the female front and rear arm pieces to replace the weld under tension with a member in tension and welds in shear while increasing the cross sectional area for a 3 to 1 safety

factor. Redesign includes going from a 2 piece clevis to a 3 piece clevis

Identify and describe how and when the recall condition was corrected in production. If the production remedy was identical to the recall remedy in the field, so state. If the product was discontinued, so state.

The new lift arms are being used in all shipments beginning August 1, 2006.

## VI. Identify the Recall Schedule

Furnish a schedule or agenda (with specific dates) for notification to other manufacturers, dealers/retailers, and purchasers. Please, identify any foreseeable problems with implementing the recall.

Week of August 14, 2006 Notices and 1st remedial components to begin shipping to buyers of lifts.

Week of August 28, 2006 Remedy Component become available to begin replacement

Weeks of September 4 through October 2, 2006 Remedy components received for continuation of replacement

Completion Target Date November 1, 2006

## VII. Furnish Recall Communications

9. Furnish a final copy of all notices, bulletins, and other communications that relate directly to the defect or noncompliance and which are sent to more than one manufacturer, distributor, or purchaser. This includes all communications (including both original and follow-

up) concerning this recall from the time your company determines the defect or noncompliance condition on, not just the initial notification. *A DRAFT copy of the notification documents should be submitted to this office by Fax (202-366-7882) for review prior to mailing.*

**See attached.**

# INSTALLATION, OPERATION & MAINTENANCE MANUAL

## Two Post
## Surface Mounted Lift

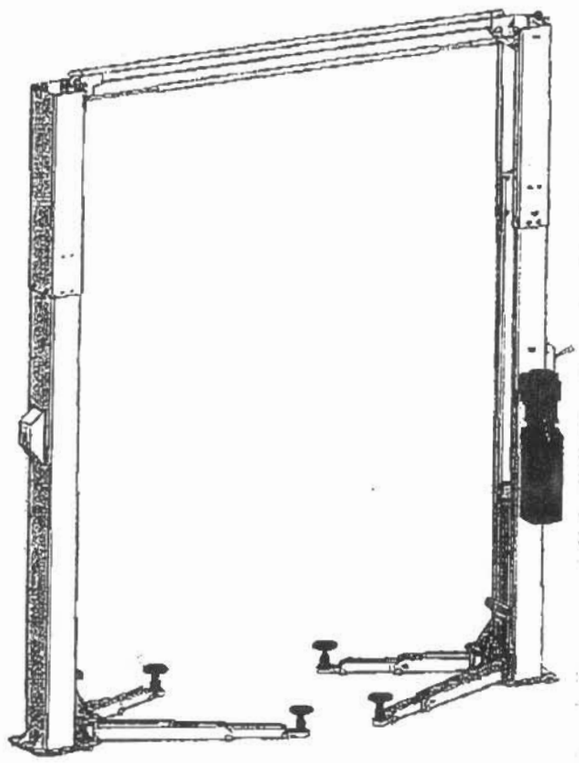

## MODEL X10

**10,000 LBS. CAPACITY**
**2500 LBS. PER ARM**

200 Cabel Street, P.O. Box 3944 Louisville, Kentucky 40201-3944
Email:*sales@challengerlifts.com* Web site:www.challengerlifts.com

**Office 800-648-5438 / 502-625-0700 Fax 502-587-1933**

**IMPORTANT:** READ THIS MANUAL COMPLETELY BEFORE INSTALLING or OPERATING LIFT

ATTACHMENT 1

# ATTACHMENT 2

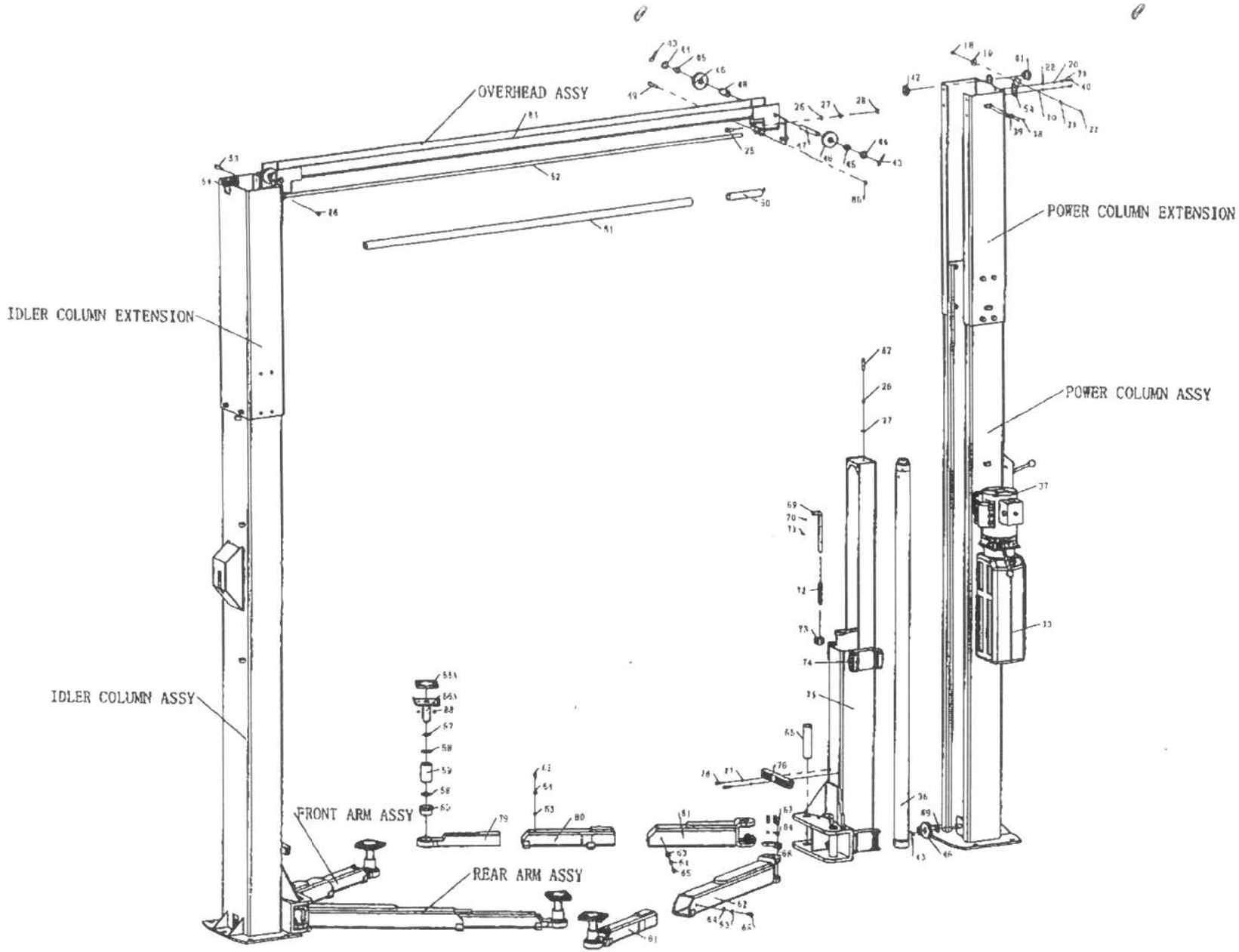


# MODEL X10