Repair Order Trucks
No. 20271

TRUCK RENTALS
of
LOUISIANA, INC.

Hertz
PENSKE Truck Rental & Leasing

DI: 31
Date: 7
Mileage: 21409

Unit Number

☐ Continuation from Repair Order No.

Parts Qty.	Number and Description	Repair Code	Cost
1	Tl. t	7	
		Total Parts	

Description of Work to be done	In	Employee Number	Repair Code	Hours	Time of /on
Dr Flat 1					off 170
Phone					on 15.5
Location					
Compl:					off
Cause					on
Correction					
Complaint					off
Cause					on
Correction					
Complaint					off
Cause					on
Correction					
Compl.					off
Cause					on
Correction					
Outside Repairs Vendor: P.O. No.					off
Tire Pressure					on
		Total Labor Hours			

000440

Check one box only
CLASS: [1] PM [2] Customer Req. [3] Road Call [4] Other

Check one box only
CAUSE: [1] Maint. & Warranty [2] Abuse [3] Accident [4] Capitalization

Accounting Distribution (Check one box only)
☐ 4040 Other Hertz District
☐ 4010/4030 Maintenance Parts & Labor
☐ 4650 Damage Repair Accident Rept No.
☐ 4207 Mechanics Wages Indirect
☐ 6036 Service Vehicle
☐ 6009 Garage Cost
☐ 1520 Capitalization Other Di

District Operations Mgr. Date
District Manager Date
Warranty (Check one) ☐ Yes ☑ No

7-6-2 (11/80)

OWNING DISTRICTS MAINTENANCE FOLDER

Repair Order Trucks
No. 14411

TRUCK RENTALS of LOUISIANA, INC.

Hertz PENSKE Truck Rental & Leasing

DI: 31
Date
Mileage 1977

Unit Number

☐ Continuation from Repair Order No.

Parts Qty.	Number and Description	Repair Code	Cost	Description of Work to be done	Init	Employee Number	Repair Code	Hours	Time off/on
1	Actorwrite	311	175.42	Dr	1				off 1[illegible].8 OCT 14
				Phone					
				Location			311	1.70	on 13.1 OCT 1[illegible]
				Compl[illegible]	R				off 23.3 OCT 14
				Cause					
				Correction	J	J[illegible]	311	5.10	on [illegible].2 OCT 1[illegible]
				Complaint Stabilizer Bracket Broken					off
				Cause					
				Correction					on
				Complaint					off
				Cause					
				Correction					on
				Complaint					off
				Cause					
				Correction					on
				Outside Repairs Vendor: P.O. No.					off
				Tire Pressure					on
		Total Parts	175.42			Total Labor Hours		6.80	

000441

Check one box only
CLASS
1 PM
2 Customer Req.
3 Road Call
4 Other

Check one box only
CAUSE
1 Maint. & Warranty
2 Abuse
3 Accident
4 Capitalization

Accounting Distribution (Check one box only)

☐ 4040 Other Hertz District	☑ 4010/4030 Maintenance Parts & Labor	☐ 4650 Damage Repair Accident Rept No.	☐ 4207 Mechanics Wages Indirect	☐ 6036 Service Vehicle	☐ 6069 Garage Cost	☐ 1520 Capitalization Other Dist

District Operations Mgr. Date District Manager Date Warranty (Check one) ☐ Yes ☑ No

-6-2 (11/80)

OWNING DISTRICTS MAINTENANCE FOLDER

Repair Order Trucks
No. 13148

TRUCK RENTALS of LOUISIANA, INC.

Hertz PENSKE Truck Rental & Leasing

DI 31

Date

Mileage 5841

1
Unit Number

☐ Continuation from Repair Order No.

Parts Qty.	Number and Description	Repair Code	Cost	Description of Work to be done		Employee Number	Repair Code	Hours	Time of Won
1	1	1		Dr Flat					off 13.5 AUG 27
				Phone					
				Location				070	on [illegible]
				Compl					off
				Cause					
				Correction					on
				Complaint					off
				Cause					
				Correction					on
				Complain					off
				Cause					
				Correction					on
				Complai					off
				Cause					
				Correction					on
				Outside Repairs Vendor: P.O. No.					off
				Tire Pressure					on
		Total Parts				Total Labor Hours		070	

000442

Check one box only
CLASS
[1] Pull
[X] Customer Req.
[3] Road Call
[4] Other

Check one box only
CAUSE
[X] Maint. & Warranty
[2] Abuse
[3] Acciden
[4] Capitalization

Accounting Distribution (Check one box only)
☐ 4040 Other Hertz District
☒ 4010/4030 Maintenance Parts & Labor
☐ 4650 Damage Repair Accident Rept No.
☐ 4207 Mechanics Wages Indirect
☐ 6036 Service Vehicle
☐ 6069 Garage Cost
☐ 1520 Cap[illegible]tion Other [illegible]

District Operations Mgr. Date District Manager Date

Warranty (Check one) ☐ Yes ☒ No

Repair Order Trucks
No. 13294

TRUCK RENTALS of LOUISIANA, INC.

Hertz / PENSKE Truck Rental & Leasing

DI: 31

Date

Mileage 6349

Unit Number 7

☐ Continuation from Repair Order No.

Parts Qty.	Number and Description	Repair Code	Cost
	1 J		
		Total Parts	

Description of Work to be done	Initials	Employee Number	Repair Code	Hours	Time of Job
Dr Flat Tire					off 8
Phone					on
Location				PSC	
Complaint					off
Cause					on
Correction					
Complaint					off
Cause					on
Correction					
Compl.					off
Cause					on
Correction					
Compl.					off
Cause					on
Correction					
Outside Repairs Vendor: P.O. No.					off
Tire Pressure					on
		Total Labor Hours		PSC	

Check one box only — CLASS: [1] PM; [X] Customer Req.; [3] Road Call; [4] Oil

Check one box only — CAUSE: [X] Maint. & Warranty; [2] Abuse; [3] Accident; [4] Capitalization

Accounting Distribution (Check one box only): ☐ 4040 Other Dist.; [X] 4010/4030 Maintenance Parts & Labor; ☐ 4650 Damage Repair Accident Rept No.; ☐ 4207 Mechanics Wages Indirect; ☐ 6030 Service Vehicle; ☐ 6000 Garage Cost; ☐ 520 Capitalization Other Dist.

District Operations Mgr. — Date — District Manager — Date

Warranty (Check one): ☐ Yes [X] No

-5-2 (1/80)

OWNING DISTRICTS MAINTENANCE FOLDER

Repair Order Trucks
No. 08658

TRUCK RENTALS of LOUISIANA, INC.

Hertz PENSKE Truck Rental & Leasing

Dl: 31

Date

Mileage

Unit Number

☐ Continuation from Repair Order No.

Qty.	Number and Description	Repair Code	Cost	Description of Work to be done	Initials	Employee Number	Repair Code	Hours	Time of /on
				Dr.					off 17 00 [illegible] 30
				Phone					
				Location					on 16 42 [illegible] 30
				Complaint					off
				Cause	11				
				Correction					on
				Complaint					off
				Cause					
				Correction					on
				Complaint					off
				Cause					
				Correction					on
				Complaint					off
				Cause					
				Correction					on
				Outside Repairs Vendor: P.O. No.					off
				Tire Pressure					on
		Total Parts				Total Labor Hours			

000444

Check one box only
CLASS
1 PM
2 Customer Req.
3 Road Call
4 Other

Check one box only
CAUSE
1 Maint. & Warranty
2 Abuse
3 Accident
4 Capitalization

Accounting Distribution (Check one box only)

☐ 4040 Other Hertz District
☐ 4010/4030 Maintenance Parts & Labor
☐ 4650 Damage Repair Accident Rept No.
☐ 4207 Mechanics Wages Indirect
☐ 6036 Service Vehicle
☐ 6069 Garage Cost
☐ 1520 Capitalization Other I Di[illegible]

District Operations Mgr. Date
District Manager Date

Warranty (Check one)
☐ Yes ☑ No

Repair Order Trucks
No. 18962

TRUCK RENTALS of LOUISIANA, INC.

Hertz PENSKE Truck Rental & Leasing

DI 31
Date
Mileage

Unit Number

☐ Continuation from Repair Order No.

Parts Qty.	Number and Description	Repair Code	Cost	Description of Work to be done	Initials	Employee Number	Repair Code	Hours	Time of Action
1		7		Dri					off 107
				Phon					on
				Location					
				Compl.					off
				Cause					on
				Correction					
				Complaint					off
				Cause					on
				Correction					
				Compl.					off
				Cause					on
				Correction					
				Compl.					off
				Cause					on
				Correction					
				Outside Repairs Vendor: P.O. No.					off
				Tire Pressure					on
		Total Parts				Total Labor Hours			

000445

Check one box only
CLASS
1
2 Customer Req.
3 Road Call
4 Other

Check one box only
CAUSE
1 Maint. & Warranty
2 Abuse
3 Acciden
4 Capitalization

Accounting Distribution (Check one box only)

☐ 4040 Other Hertz District	☐ 4010/4030 Maintenance Parts & Labor	☐ 4650 Damage Repair Acciden. Rept No.	☐ 4207 Mechanics Wages Indirect	☑ 6036 Service Vehicle	☐ 6060 Garage Cost	☐ 520 Capitalization Other Di

District Operations Mgr. Date District Manager Date

Warranty (Check one) ☐ Yes ☑ No

-5-2 (1/90)

OWNING DISTRICT MAINTENANCE FOLDER

1054

BROWN'S VELVET FOODS CO.
PUBLIC WEIGHING SCALE
2030 LOUISIANA AVE. NEW ORLEANS, LA. 70115
Telephone (504) 895-6677

Date 6/9/8

Customer's Name RULLINS LEASING

Address 67475

Commodity

Carrier

Remark

5460 1.6 lbs. Gross 6-9-88 9:48AM

lbs. Tare

lbs. Net

Driver On Off

Price $ 35 Cash Charge

Shipper

Weigher J Bundreau

000446

G30 TRUCK FLCA ACCELERATED FATIGUE TEST SUMMARY

TORQUE 450 FT-LBS PEAK TO PEAK

ARM #	Description	CYCLES TO CRACK INITIATION @ Radius	@ Flange	Full Flange Crack	
2	Fabricated Notch	20000	25000	47000	
3	Fabricated Notch	50000	90000	116000	
4	Fabricated Notch	20000	25000	55000	
5	Fabricated Notch	25000	30000	55000	
6	Production	50000	782000	808000	
7	Precracked with Bracket	N. A.	N. A.		Bracket tight and intact at 1,000,000 cycles. Test suspended. Radius and flange cracks did not extend during test.
9	Production	40000	2303000		Test suspended without flange cracks.
10	Production	30000	1430000		Test suspended with full front flange crack but without rear flange crack.
11	Production	40000	1562000	1575500	[Note: front flange crack initiated first @ 1320000]
12	Notched 1985-86	9500	49500	72000	

000447

13 Production	50000	1393700	1393700 [Note: front flange crack initiated first @ 1200000]
14 Production	40000	843000	942000
15 Production	20000	710000	710700 [Note: front flange crack initiated first @ 657200]
16 Production	30000	467200	480000
17 Production	30000	503300	503300 [Note: front flange crack initiated first @ 463800]

Note: Production arms 9, 10 and 11 were lightly sanded at flange edge to accomodate crack detect gages. Arm 11 has been "struck" at edge of rear flange to "counter" sanding with higher stress concentration.

Mean cycles to crack initiation

o Fabricated Notch Arm	28750	42500	
o '88 Production Arm	36700	1110000	(includes arms 6,9,10,11,13,14,15,16 and 17)
o 85-86 Production (Notched)	9500	49500	

Note: The radius at the ball joint flange on the arms above is 2.0mm however the radius on the '84 '86 arms is 0.0mm. It is predicted that when we test the arms with the tighter radius, the radius cracks will initiate significantly sooner than 20000 cycles.

000448

L.C.A. USAGE CHART

ARM ASM	TYPE	YEAR	REAR WHEEL	MODELS	SUSPENSION ASM PART No.	AIR BAG	SUSP. CAPACIT'
14026581	NR	85,86	SINGLE	C200(· ·)	14043461,14043462	N	
			"		14043463,14043464	N	
			"		14054636,14064639	N	
			"		14064654	N	
			DUAL	C30-(· ·) & R05 F42	14024514,14024515	N	
			SINGLE	C300(03) R05	14024512,14024513	N	
14066885	NR	85,86	SINGLE	G300(· ·)	15597834,15522295	N	
			"		15597830	N	
			"		15597832,15597833	N	
			"		15597836	N	
			DUAL		15597837,15597838	Y	
			DUAL		15522157	Y	
			DUAL		15597831,15597835	N	
14067155	NR	85,86	SINGLE	P200(43)	14067153	N	
			SINGLE	P200/300 (42)	14067154	N	
			SINGLE	P300(42) R05	14067157	N	
* 15599301	NR	85,86	DUAL	P300(42) & R05	14067158	N	
14026591	R	85,86	DUAL	C300(· ·) & 42	14032908	Y	
15598369	R	85,86	DUAL	G31603	1598362,15598363	Y	
14067147	R	85,86	DUAL	P30000	14067144,14067145	Y	
14067151	R	85,86	DUAL	P308/11/14 (32)	14067146	Y	
15599355	R	85,86	SINGLE	P308/10/14 (42)	15599352	Y	
			DUAL	P30042 & R05	15599353	Y	

NR = NON-REINF.
R = REINF.

rev:14AP88

000449

L.C.A. L.H. ASM. BREAK DOWN CHART

ARM ASM	TYPE	USE	WELDING ASM	STAMPING DETAIL	ARM REINF	BUMPER TOWER	BUMPER JOUNCE	SHOCK BRKT	SHOCK REINF	LOWER B.J.ASM	LCA SHAFT ASM	X-SHFT. REINF.	U/W AIR BAG
14026581	NR	C20/30	14005159	6263891	NONE	14005153	14007189	3817984	6260679	9755486	3892419	NONE	NO
14066885	NR	G30	14000561	"	"	14000529	14054761	"	"	"	"	"	*NO/YES
14067155	NR	P20/30	14005159	"	"	14005153	"				"		NO
15599301	NR	P30	"	"		"		"		"			NO
14067151	R	P30	14005167	"	346893	"					"		YES
14026591	R	C30	14005171	"	"	"	14007189			"	337515	337508	YES
14067147	R	P30	"	"			14054761	"			"	"	YES
14067149	R	P30	"	"			"		"	9756806	"	"	YES
15599355	R	P30	"	"	"	"		"		"			YES
15598369	R	G30	15598371	"	"	14000529						"	YES

* G30 SINGLE WHEEL RR AXLE NO AIR BAG
G30 DUAL WHEEL RR AXLE WITH AIR BAG

000450

NON – REINFORCED LOWER CONTROL ARM CONFIGURATIONS & USAGE

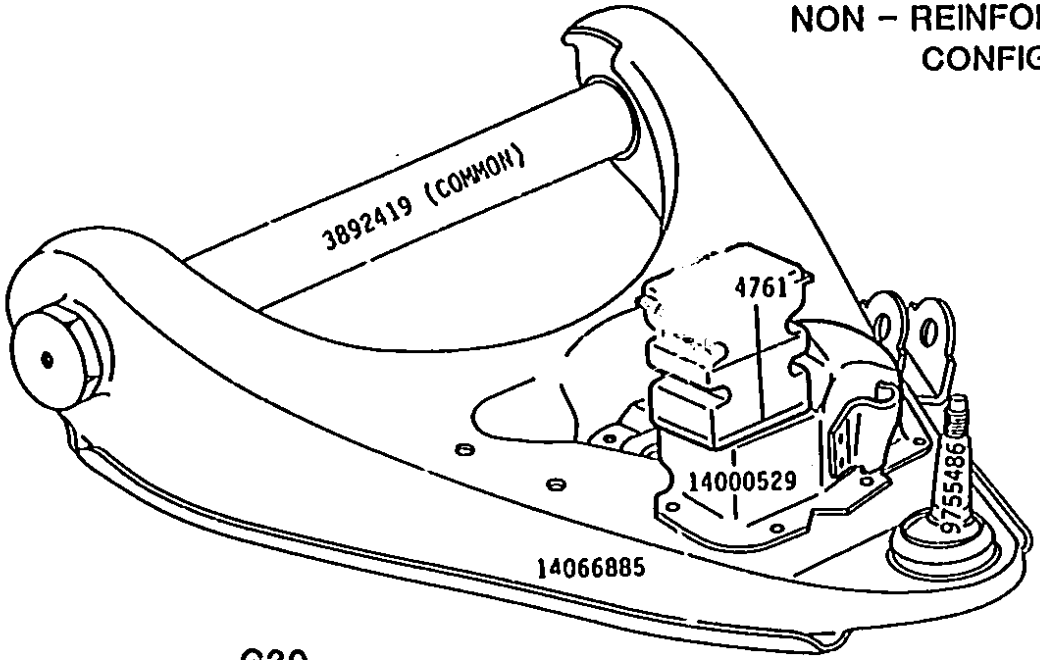

G30
VANS, CUT-AWAYS, HI-CUBES, MOTOR HOMES

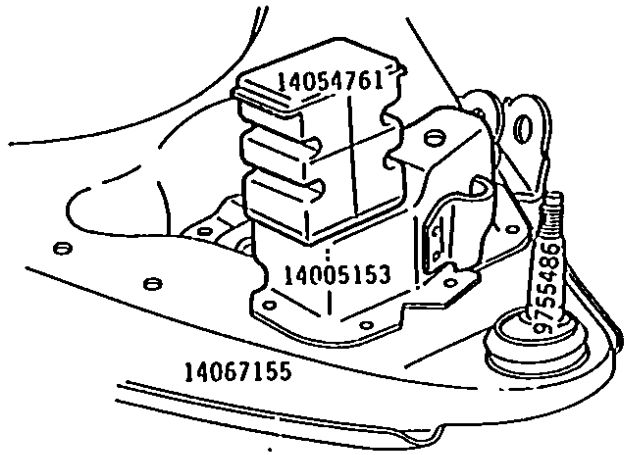

P20-30
SINGLE WHEEL REAR AXLE
COMMERCIAL CHASSIS

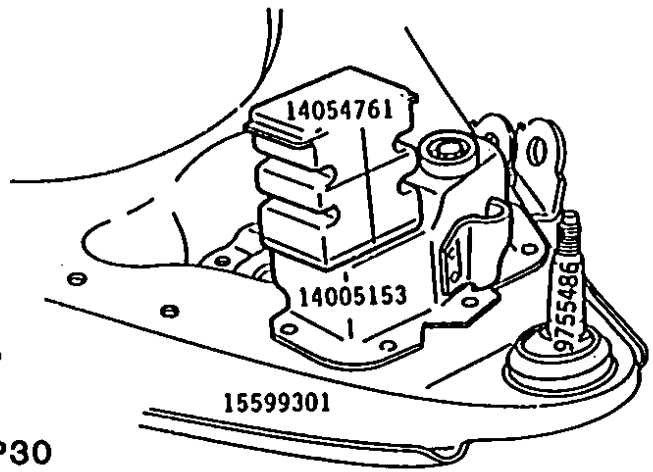

P30
DUAL WHEEL REAR AXLE
COMMERCIAL & MOTOR HOME CHASSIS

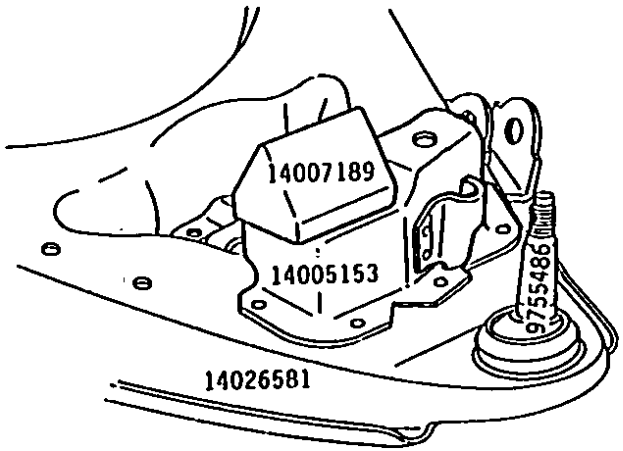

C20-30
CONVENTIONAL CAB

000451

REINFORCED 1985-6 C-P-G 30 SERIES
LEFT FRONT LOWER CONTROL ARMS

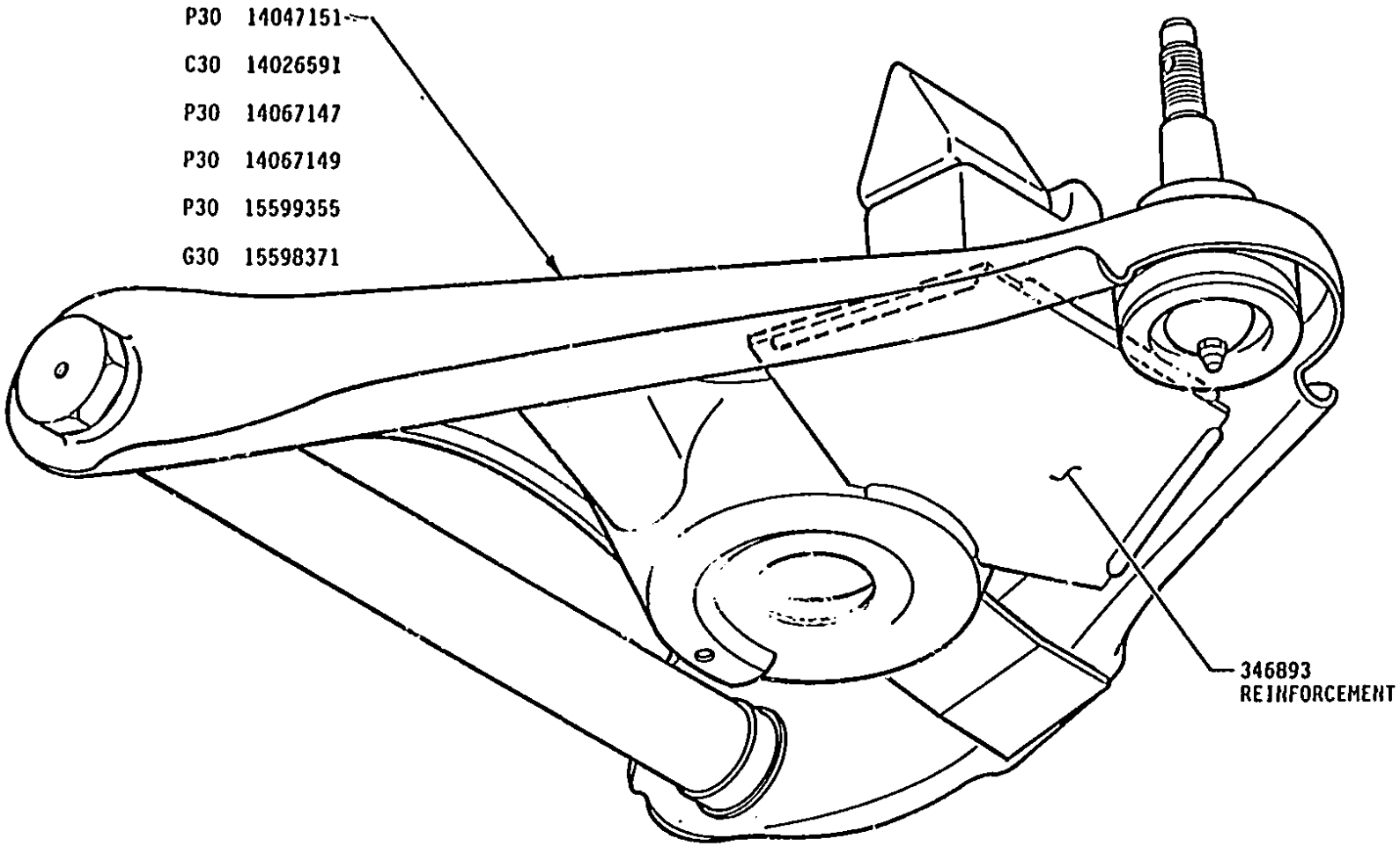

003452

14AP88

LH LOWER CONTROL ARM
OUTBOARD END

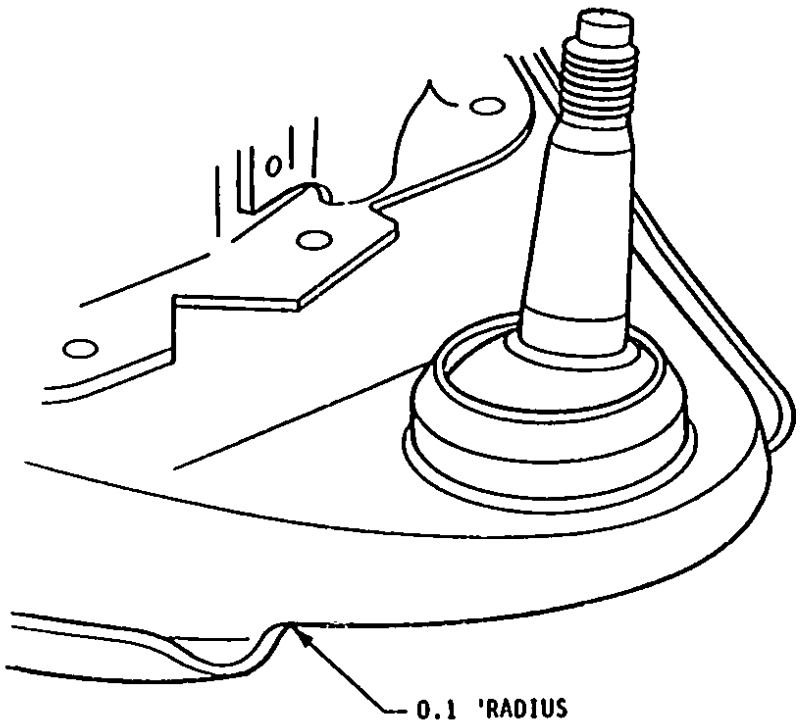

1985 & 6 C-P-G 30 SERIES
AS MANUFACTURED

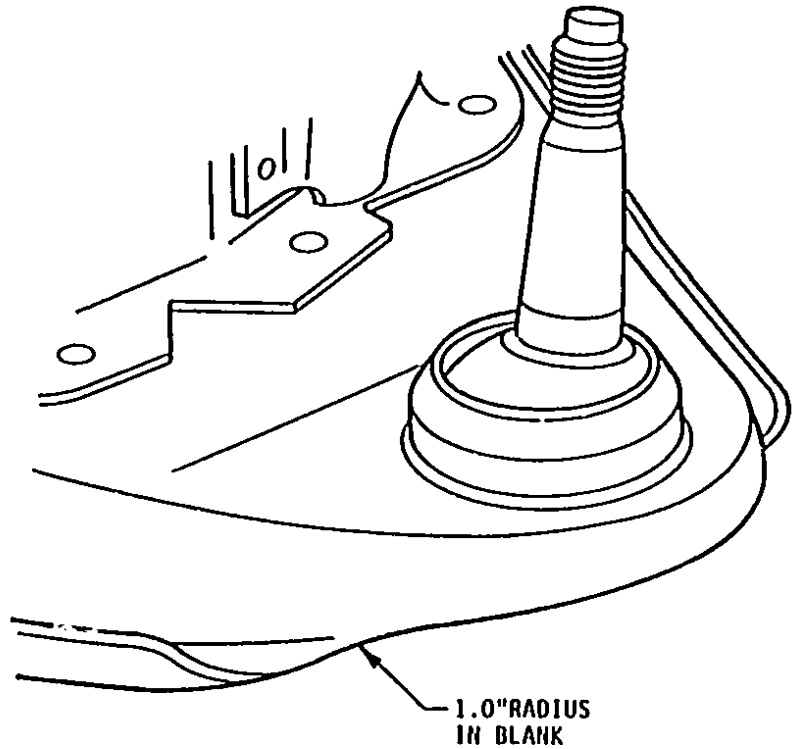

1973 - 84 C-P-G 30 &
1987 & LATER R-P-G 30
AS MANUFACTURED

000453

NON - REINFORCED 1985-6 C-P-G 30 SERIES
LEFT FRONT LOWER CONTROL ARMS

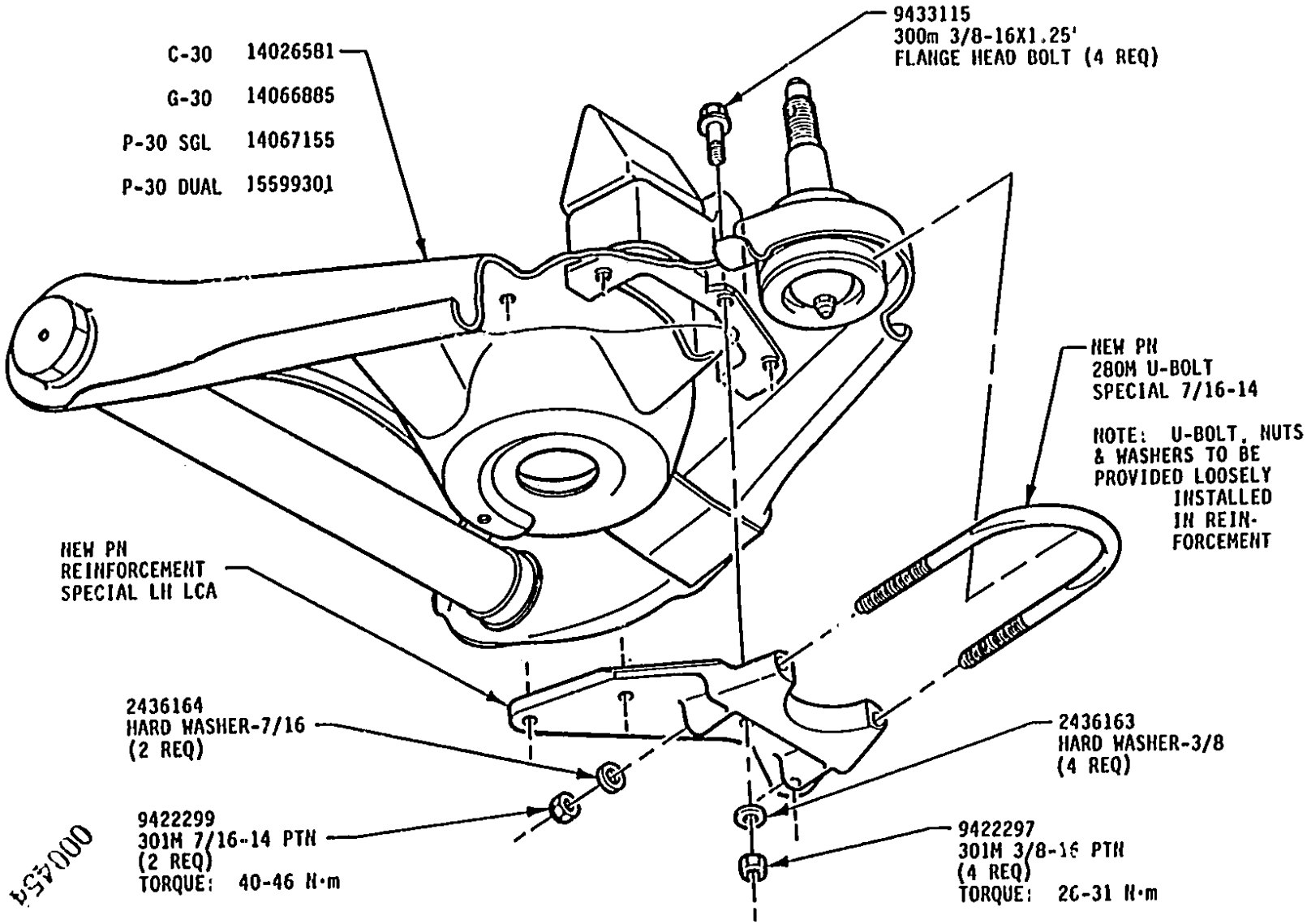

00454

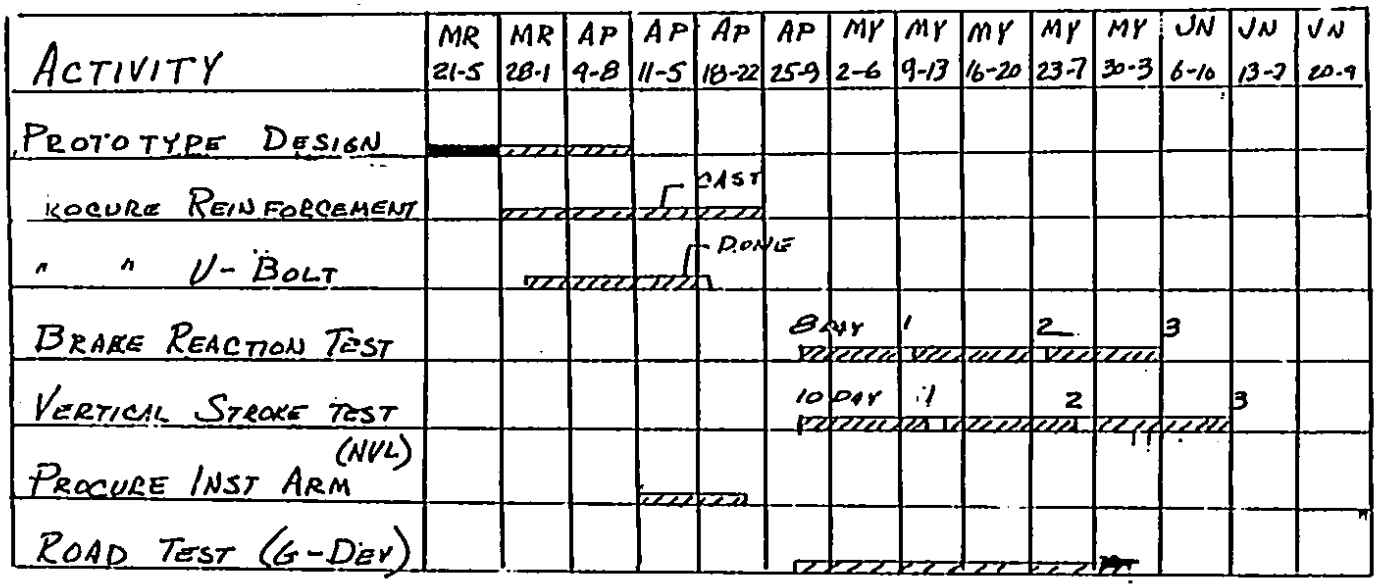

CP-G 30 ARM REINFORCEMENT
TEST SCHEDULE
EPN 35854

000455

27P
14 APR 88

PROGRAM DMRPCR17A GMC TRUCK AND COACH OPERATION PAGE
CONSUMER RELATIONS RUNDATE 08/05/88
COMPLETE FILE REPORT

REFERENCE
FILE NBR: 88-001133 OWNER: MR. TOM PARKER

OWNER
NAME: MR. TOM PARKER

COMPANY: SIMI VALLEY SCHOOL DISTRICT

ADDRESS STREET: 1725 DEO DORA

CITY: SIMI VALLEY ST: CA ZIP: 93065-

PHONE HOME:
WORK: (805) 526-8434 EXT:

VEHICLE
VIN: 2GDHG31J4G4513851 MODEL: G6 DELIVERY:
MODEL CODE: GVN DESCRIPTION G-VAN

CASE SUMMARY
CASE NO: 88-001133-01 TYPE: SER OPENED: 12/04/87
CORP NO: ORIGIN: P CLOSED: 01/04/88
VEH NO: STATUS: CLOSED
COMPLAINTS: N2

CASE NO: 88-001133-02 TYPE: SER OPENED: 06/17/88
CORP NO: ORIGIN: P CLOSED: 06/20/88
VEH NO: STATUS: CLOSED
COMPLAINTS: F1

000456

REFERENCE
FILE NBR: 88-001133 OWNER: MR. TOM PARKER

CASE INFORMATION
CASE NBR: 88-001133-01 COPR NBR: LEGAL NBR: TYPE: SER

RESPONSIBLE PARTY
NAME: J. A. HAMILL
DSM: ST DM: ZSM: CRM: C.O. STAFF:

SERVICE DEALER
CODE: 48-42-299 NAME: SILVER STAR BUICK GMC
CITY: THOUSAND OAKS ST: CA

SELLING DEALER
CODE: NAME. SILVER STAR BUICK GMC
CITY: THOUSAND OAKS ST CA

OPENING INFORMATION
OPEN DATE: 12/04/87 RECEIVED DATE: 12/04/87 STATUS: CLOSED
SOURCE: 00 ORIGIN P SPECIAL: MILEAGE: 014000
C.O. ACKNOWLEDGMENT: SUPPORT DOCUMENTS TO FOLLOW:
ROUTING: DMAC TO DEALER FOLLOW UP ALLGD SAFT

INITIAL CONTACT DATE: 12/10/87
METHOD: MAIL: TELEPHONE: LETTER: PERSONAL CONTACT: Y
FILE ONLY:

CLOSING INFORMATION. DATE:01/04/88 BY: ANDERSON A. W.
OWN: 12/10/87 DLR: 12/10/87 DMAC:12/10/87 C.O.
CLOSURE CODE: S CLOSING CORRESPONDENCE:

FILE RETENTION
PURGE: 01/04/89 SCRAP: 07/04/88

000457

REFERENCE
FILE NBR: 88-001133 OWNER: MR. TOM PARKER

CASE INFORMATION
CASE NBR: 88-001133-01 COPR NBR: LEGAL-NBR: TYPE: SER

COMPLAINT INFORMATION FTC:
CODE: N24 DESCRIPTION: OIL PRESSURE GAUGE/INDICATOR
BY: DEFELICE, ELKE N.
OPENING COMMENTS:
CUST. STATES THAT OIL GUAGE KEEPS SHOWING ON THE HIGH SIDE, THEY'VE REPLACED IT ONCE ALREADY AND STILL IT DOESN'T WORK. CUSTOMER SEEKS ASSISTANCE.
DEALER CLOSING COMMENTS: DEALERS.
DEALERSHIP REPAIRED INSTRUMENT CLUSTER.

DMAC CLOSING COMMENTS:

R.O. NUMBER:

000458

REFERENCE
FILE NBR: 88-001133 OWNER: MR. TOM PARKER

CASE INFORMATION
CASE NBR: 88-001133-02 COPR NBR: LEGAL-NBR: TYPE: SER

RESPONSIBLE PARTY
NAME: J. A. HAMILL
DSM: 51 DM: ZSM: CRM: C.O. STAFF:

SERVICE DEALER
CODE: 48-42-299 NAME: SILVER STAR BUICK GMC
CITY: THOUSAND OAKS ST: CA

SELLING DEALER
CODE: NAME: SILVER STAR BUICK GMC
CITY: THOUSAND OAKS ST: CA

OPENING INFORMATION
OPEN DATE: 06/17/88 RECEIVED DATE: 06/17/88 STATUS: CLOSED
SOURCE: 00 ORIGIN: P SPECIAL: MILEAGE: 024000
C.O. ACKNOWLEDGMENT: SUPPORT DOCUMENTS TO FOLLOW:
ROUTING: DMAC ONLY FOLLOW UP: ALLGD SAFETY:

INITIAL CONTACT DATE: 06/20/88
METHOD: MAIL: Y TELEPHONE: LETTER: PERSONAL CONTACT:
FILE ONLY:

CLOSING INFORMATION. DATE:06/20/88 BY: HAMILL, J. A.
OWN: 06/20/88 DLR: 06/20/88 DMAC:06/20/88 C.O.
CLOSURE CODE: 5 CLOSING CORRESPONDENCE: Y

FILE RETENTION
PURGE: 06/20/89 SCRAP: 12/20/88

000459

REFERENCE
FILE NBR: 88-001133 OWNER: MR. TOM PARKER

CASE INFORMATION
CASE NBR: 88-001133-02 COPR NBR: LEGAL-NBR: TYPE: SER

COMPLAINT INFORMATION FTC:
CODE: F17 DESCRIPTION: CONTROL ARMS/UPPER & LOWER
BY: BUCHANAN, B. M.
OPENING COMMENTS:
CUST. SAYS THAT LOWER CONT. ARMS WERE CRACKING AROUND BALL JOINT (LEFT SIDE). SCHOOL HAS CHANGED THESE AND WOULD LIKE SOME REIUMBURSEMENT FOR THIS REPAIR. CUST. ALSO STATES THAT HE HAS A PUBLICATION FROM (PF17)
DEALER CLOSING COMMENTS:

GMAC CLOSING COMMENTS:
SENT MAILGRAM ASKING CUSTOMER TO CONTACT DLR AND HE WILL REVIEW AND CONTACT GMC. ...OTHERWISE NOTHING WE CAN DO
P.O. NUMBER:

000460

DATE 07/28/88
TIME 8:56:20

xxx TAS GENERATION II CASE RECORD xxx

PAGE

CASE NUMBER: 00474157

SYMPTOM ABSTRACT- LEFT LOWER CONTROL ARM BROKEN
CAUSE ABSTRACT-
RESOLUTION ABSTRACT- R/R CONTROL ARM
PART NUMBERS-
BULLETIN NUMBERS-

DESCRIPTION DATA

DEALER CODE-	T06171
DEALER NAME-	DAY BROTHERS
DEALER CITY-	AUBURN
DEALER STATE-	MA
DEALER REP. TITLE-	SM CHARLES ROBAR
DEALER PHONE-	6177917101
VEHICLE IDENTIFIER	1GDHP32J703503115
YEAR/SERIES-	86P3
MILEAGE-	039552
SYMPTOM COMPONENT-	SUSP
COMPONENT TYPE	
ASSIGN LEVEL -<H>	2
UCC CODE 1-	F17
UCC-1 DESCRIPTION-	CONTROL ARMS
UCC-CODE 2-	S99
UCC-2 DESCRIPTION-	*POSSIBLE SAFETY
UCC-CODE 3-	
UCC-3 DESCRIPTION-	

RESOLUTION DATA

DISPOSITION- -<H>	I06
DATE CLOSED- -<H>	01/29/88
SOLUTION KNOWN- -<H>	YES
LABOR CODE- -<H>	
RESOLUTION UCC-	F17
UCC DESCRIPTION-	CONTROL ARMS
RES-COMPONENT-	SUSP
ORIGINAL CASE ID-	
DIVISION ASSIGNED<H>	
PROBLEM IMPACT- -<H>	
SSC LETTER CODE- -<H>	

RECORD CONTROL DATA

DATE OPENED-	12/17/87
TIME OPENED-	15:10
DATE ENTERED-	12/17/87
TIME ENTERED-	15:24
DIVISION NAME-	TRUCKBUS
TECHNICAL REP. -<H>	ALAN/STEOICH
TSO IDENTIFIER- -<H>	H48CHAS
OWNING CLASS-	TRUCK
DATE ALTERED- -<H>	01/29/88
TIME ALTERED-	08:20
USER LAST ALTERED- -<H>	H48CHAS
UPDATE COUNT <9=9/UP>	
OLD CASE <01-09>	
NEW CASE <. . ..>	
<02-09>	03

```
TEXT  12/17/87 15:24 H48CHAS  86 P3 LEFT LOWER CONTROL ARM BROKE AT BETWEEN THE BALL JOINT
                              1/4" BEHIND THE BALL JOINT   AND FOLLOWS AROUND THE SKIRT OF TH
                              E BALL JOINT   THE ARM ACTUALLY BREAKS AND CONTACTS THE GROUND.
                               FLEET IS THE TELEGRAM /GAZZETTE- WORCESTER,MA. FLEET OF 12
                              VEHICLES      50/50 CITY /SUB  DRIVING
                              TWO OTHER VEHICLES ARE INVOLVED   1GDHP32MXF3507670  105,408 MI
                                                                1GDHP32J0G3503117  57,652  MI
      12/17/87 15:34 H48CHAS  DLR SM CHARLIE
      12/17/87 15:24 H48CHAS  FLEET HAS CK OTHERS  VEHICLES  NO PROBLEMS
                              PN OF CONTROL ARM  15594133
                              PARTS ARE AVAILABLE FOR INSPECTION   SM SAID TRUCKS  ARE HELL
                              MAINTAINED  -CARRY NEWSPAPERS   10,000 GVW
                              TAC CASE SENT TO PROD SERVICE ATTN
                              FLEET HAS  REPLACED THE FAILED ARMS
      12/17/87 15:34 H48CHAS  REC WILL FOLLOW UP   REQUEST FT AXLE HEIGHT
      01/11/88 11:27 H48CHAS  SUPPLIER  HAS HAD A PROBLEM   WITH THE CONTROL ARMS
                              RADIUS AROUND BALL JOINT IS CAUSING  STRESS   TOO TIGHT  OF A
                              STAMPING /RADIUS     BAD STAMPINGS. ITS NOT ONLY THE
                              P MODEL
                              REC REPLACE  THE CONTROL ARM
```

000461

CHEVROLET

Chevrolet Motor Division
General Motors Corporation

Customer 031230-9.99

Component 531230 107

1	2	3	4	5	6	7	8	9	10	11	12	13	14	15	16	17
1	G	B	A	P	3	2	T	3	F	3	3	4	6	6	1	3

Veh. Line | Body Type | Eng. | Yr. | Plt.

Odometer 26915 — Car Report ☐ — Truck Report ☒

TECHNICAL SERVICE OPERATIONS
TO NOTED
L. S. DICKINSON
J. L. HENRY
D. R. DIEDERICH
R. T. PRICE
J. B. GRIFFIN
J. F. POSEGAY
JAN 29 '88
R. C. ROBINSON
L. J. GAGE
R. A. BRILSON
T.R.R.

Field Product Report
FR 20928
1 09 JRB
Pers 031401
Yes X No

Contact Date 01 12 88

Special Investigation/Assignment No.

PRODUCT INVESTIGATION

Part # 14026521 Name Lower Control Arm

Parts Returned: Yes / No / Held — Held

Material Disposition: Product Assurance ☐ Plant ☐ Other ☐

Select Material List Item: Yes ☐ No ☒

Organization—Location: Fleet Acct - Mr. Baird's Bakery - Dallas, Tx

Personnel Contacted—Source of Information: SAM MAY - Sec Mgr

Engine | Trans. | Axle | Other

75-P3-FR. Susp. -L Lower control Arm - Broken - Broken

Left front of vehicle fell down and driver lost control, was able to stop vehicle without further damage. No other vehicles or property involved. City Delivery Bread Truck.

Left lower control arm broke out around lower ball joint (completely seperated) and allowed left front wheel to fold over + left front of truck fell to pavement

Replaced left lower control arm, ball joint + aligned front end. The replacement control arm has a different contour at location of break than original arm. - Parts furnished by Stanley Chev Dallas, Vaid for by Chevrolet and installed by the Fleet account in our shop. Additional failure VIN 1GBP32T4F3346633 mileage 21,000. This fleet very concerned since they have 51 vehicles identical (1985 models) to the two failed units. Suggested that visual inspection be made to all units. Joint contact with C.D. Inpar Fleet Sec Mgr.

RECEIVED FEB 2 1988

Signature — Title SE

Mail To:
Technical Service Operations
C.C.O. Room 163-138
30007 Van Dyke Warren, Michigan 48090

Page 1 of 1

PRODUCT IMPROVEMENT

CHEVROLET

Chevrolet Motor Division
General Motors Corporation

Customer 031000-756

Component 031230-158

TECHNICAL SERVICE OPERATIONS
TO NOTED
L. S. DICKINSON
J. L. HENRY
D. D. DIETERICH
R. T. PHIL
X J. B. GIFFIN
J. F. POSEG

JUN 20 '88

Field Product Report 1
FR 22091
0608WEK

Pers. 0314005
Yes ☐ No ☑

Contact Date 061388

Special Investigation/Assignment No

1	2	3	4	5	6	7	8	9	10	11	12	13	14	15	16	17
1	G	C	H	P	3	2	M	1	G	3	3	2	0	4	7	0

Veh. Line | Body Type | Eng. | Plt.

24000 Odometer ☐ Car Report ☑ Truck Report

Part # 14026581
Name Frt. low. control arm
Parts Returned Yes ☐ No ☑ Held

Material Disposition
Product Assurance ☐ Plant ☐ Other ☐

Select Material List Item Yes ☐ No ☑

Organization—Location
Brown Chev. Berwick PA. 15-065

Personnel Contacted—Source of Information
Paul Logan Branch

Engine	Trans.	Axle	Other

TO PRODUCT INVESTIGATION J. S

86-P3-Fr. susp-lower control arm-sags-cracked

Veh-sags Lt. frt. corner.

TO C-P-C PI

Fleet-Laundry delivery

Insp. found Lt. lower control arm cracked + Torn just behind ball joint location, Veh equipped with base susp. No evidence of impact or damage to control arm. See Photo. R&R control arm ASM. Repair performed by sublet. Normal operation.

RECEIVED

JUL 18 1988

PRODUCT IMPROVEMENT

Mail To:
Product Assurance Field Activities
P.O.B. Room 163-155
30007 Van Dyke Warren, Michigan 48090

Signature ☑ ☑ D. E. Kocher FSE 000463

6/20

GSD Rev 7-82

GM CURRENT PRODUCT ENGINEERING 53 . . 551 J.C PG-3670-17 Rev. 3/87

FIELD INFORMATION REPORT

REPORT NO. [illegible]

☐ INCIDENT REQUIRES RESPONSE ☐ INFORMATION/ HEARSAY ☐ TEST/SURVEY PROGRAM Ref. No. _____ ☐ SPECIAL REQUEST Ref. No. _____

TO (Div.) CPE ENGINEERING INVESTIGATIONS	ATTENTION: [illegible]
FROM (Div.) [illegible]	INITIATOR: FRANK [illegible]
FLEET NAME/DEALER [illegible]	REPAIR ORDER NO. / INCIDENT DATE 2/12/88
MAKE [illegible] / YEAR 86 / CARLINE/SERIES [illegible]	VIN [illegible]
VEHICLE NO. 141 / ENGINE CYL & DISP [illegible]	TRANS AUTO ✓ MAN ___ / ODOMETER 61100
PART DESCRIPTION LF Lower Control Arm / PRODUCTION ✓ NON-PROD ___	PART MILES 61100 / UPC 3A / RELATED SYSTEMS/OPTIONS 9000 GVW

VEHICLE DUTY CYCLE: Family ___ Short Trips ___ Courier ___ Sales ___ Taxi ___ Truck ✓ Police ___ Other (Explain) _____

COMPLAINT SYMPTOM:

LF Lower control ARM broke while delivering newspaper

SOURCE OF COMPLAINT: Driver ___ Dealership ___ Inspection / Observation ___ Other (Explain) _____

CORRECTIVE ACTION/REPAIR:

Replace LF Lower Control Arm

OBSERVATIONS/COMMENTS:
(No Opinions)

PHOTOGRAPHS	OTHER ATTACHMENTS	PARTS	SHIPPED TO:
Yes ___ No ✓ Qty ___	Yes ___ No ✓ Qty ___	Yes ✓ No ___	John Le[illegible]

ADDITIONAL COPIES TO:	SIGNATURE:	DATE	PHONE NO.
J.E. STEGER	[illegible]	2/17/88	4[illegible]-0665

RESPONSE (If Req'd):

Interim ___ Final ___ Name: _____ Date: ___/___/___ Phone No. _____

RESPONSE ADDRESSEE: N. B. ZAUEL

ENGINEERING BLDG. S3-EFT
30200 MOUND RD.
WARREN, MI. 48090-9010

000464

COPY 1. Attention 2. Dept. Copy (N. B. Zauel) 3. Initiator 4. Attac. to Mat.

GM CURRENT PRODUCT ENGINEERING

PG-3570-17 Rev. 3/87

FIELD INFORMATION REPORT

REPORT NO. 849-02

☑ INCIDENT REQUIRES RESPONSE ☐ INFORMATION/ HEARSAY ☐ TEST/SURVEY PROGRAM Ref. No. ____ ☐ SPECIAL REQUEST Ref. No. ____

TO (Div.) OPE- Engineering	ATTENTION: Dave Horchler
FROM (Div.) OPE- EFT Pittsburgh	INITIATOR: Frank Dvorsky
FLEET NAME/DEALER Pittsburgh Press	REPAIR ORDER NO. / INCIDENT DATE 5/19/88
MAKE Chev. / YEAR 85 / CARLINE/SERIES C-20 Chassis	VIN 1GBGC34M0FJ174792
VEHICLE NO. 38 / ENGINE CYL & DISP 8cyl 5.7L	TRANS AUTO ✓ MAN ___ / ODOMETER 107739
PART DESCRIPTION L.F. Lower Control Arm / PRODUCTION ✓ NON-PROD ___	PART MILES 107739 / UPC 3A / RELATED SYSTEMS/OPTIONS

VEHICLE DUTY CYCLE: Family ___ Short Trips ___ Courier ___ Sales ___ Taxi ___ Truck ✓ Police ___ Other (Explain) ___

COMPLAINT SYMPTOM:

L.F. Lower control arm broke at ball joint while delivering newspaper

SOURCE OF COMPLAINT: Drive ✓ Dealership ___ Inspection / Observation ___ Other (Explain) ___

CORRECTIVE ACTION/REPAIR:

Replace L.F. Lower control arm.

OBSERVATIONS/COMMENTS: (No Opinions) Dave John Lesich asked me to return this part after speaking with a contact at Truck & Bus. This condition was reported previously FIR 750c

PHOTOGRAPHS	OTHER ATTACHMENTS	PARTS	SHIPPED TO:
Yes ___ No ✓ Qty ___	Yes ___ No ✓ Qty ___	Yes ✓ No ___	Dave Horchler / John Lesich

ADDITIONAL COPIES TO:	SIGNATURE:	DATE	PHONE NO.
C. Matthews	Frank Dvorsky	6/6/88	412 351-0665

RESPONSE (If Req'd):

Interim ___ Final ___ Name: ___ Date: ___/___/___ Phone No. ___

RESPONSE ADDRESSEE: N. B. ZAUEL

ENGINEERING BLDG. S3-EFT
30200 MOUND RD.
WARREN, MI. 48090-9010

000465

Attention 2. Dept. Copy (N. B. Zauel) 3. Initiator 4. Attach to Mat'l

GM CURRENT PRODUCT ENGINEERING

PG-3670 Rev. 3/87

FIELD INFORMATION REPORT

REPORT NO. 857-02

☑ INCIDENT REQUIRES RESPONSE ☐ INFORMATION/ HEARSAY ☐ TEST/SURVEY PROGRAM Ref. No. ☐ SPECIAL REQUEST Ref. No.

TO (Div.) CPE EFT WARREN MI	ATTENTION: DAVE HORCHLER
FROM (Div.) CPE EFT PITTSBURGH PA	INITIATOR: JIM MORRIS · FRANK DVORSKY
FLEET NAME/DEALER PITTSBURGH PRESS	REPAIR ORDER NO. / INCIDENT DATE 6/2/85
MAKE CHEV / YEAR 86 / CARLINE/SERIES C-30	VIN 1GBGC34M0GJ175182
VEHICLE NO. 142 / ENGINE CYL & DISP 8 5.7L	TRANS AUTO X MAN ___ / ODOMETER 084,301
PART DESCRIPTION L.F LOWER CONTROL ARM / PRODUCTION X NON-PROD ___	PART MILES 084,301 / UPC 3A / RELATED SYSTEMS/OPTIONS

VEHICLE DUTY CYCLE: Family ___ Short Trips ___ Courier ___ Sales ___ Taxi ___ Truck ✓ Police ___ Other (Explain) ___

COMPLAINT SYMPTOM: L.F LOWER CONTROL ARM BROKE AT BALL JOINT WHILE DELIVERING NEWS PAPERS

SOURCE OF COMPLAINT: Driver ✓ Dealership ___ Inspection / Observation ___ Other (Explain) ___

CORRECTIVE ACTION/REPAIR: REPLACE L.F. LOWER CONTROL ARM

OBSERVATIONS/COMMENTS: (No Opinions) SAME AS INCIDENT # 849-02 & # 750-02

PHOTOGRAPHS	OTHER ATTACHMENTS	PARTS	SHIPPED TO:
Yes ___ No ___ Qty 1	Yes ___ No ✓ Qty ___	Yes ✓ No ___	DAVE HORCHLER JOHN LESICH

ADDITIONAL COPIES TO:	SIGNATURE:	DATE	PHONE NO.
[illegible]	James R. Morris	6/12/85	412 35[illegible] 0665

RESPONSE (If Req'd) C. MATTHEWS

Interim ___ Final ___ Name: ___ Date: ___/___/___ Phone No. ___

RESPONSE ADDRESSEE: N. B. ZAUEL

ENGINEERING BLDG. 33-EFT
30200 MOUND RD.
WARREN, MI. 48090-9010

COPY 1. Attention 2. Dept. Copy (N. B. Zauel) 3. Initiator Attach to Mat'l

T E C H N I C A L A S S I S T A N C E S Y S T E M

CASE NO: 0478147
DATE OPENED: 01/05/1988
DATE CLOSED: 01/15/1988
SOURCE:
DEALER CODE: T53528
ADDRESS:
HOME PHONE: 813 6216931

VIN: 2GDHG31M9G4503682
MODEL YR: 86
SERIES: G3
MILEAGE: 34896

BUS. PHONE:
EXT:

SYMPTOM ABSTRACT---- LEFT LOWER CONTROL ARM CRACKED
RESOLUTION ABSTRACT- REPLACED LOWER CONTROL ARM
UCC CODE 1---------- F17
UCC-1 DESCRIPTION--- CONTROL ARMS
UCC-CODE 2---------- S99
UCC-2 DESCRIPTION--- #POSSIBLE SAFETY
UCC-CODE 3----------
UCC-3 DESCRIPTION---

SM REPORTS 86G3 LEFT LOWER CONTROL ARM IS CRACKED AROUND THE BALL JOINT. VAN IS USED IN HOSPITAL WORK. RECOMMENDATION: REPLACE THE ARM. ALSO CHECK FOR HEAVY FRONT END LOADING AND LEAKING OR WEAK/WORN SHOCK. DOES A-FRAME RUBBER SNUBBER SHOW SIGNS OF HEAVY BOTTOMING INDICATING HARD USE?
SM REPORTS INSTALLED NEW LOWER CONTROL ARM.

000467

[redacted]

From the desk of
J.M. COMPAGNONI

GM Customer Service

6-8-88

Donna

P. Birsa

6-8, 9, 10
Travel Agenda

Rollins Leasings

504-837-5500 (Marty Weston)

Jefferson LA

[redacted]

Hotel - Holiday Inn
504 833-820

Return 6-10 A.M. Flight

[redacted]

Gerry

2nd Floor General Motors Building — Phone 6-4842
DETROIT

000468

50 V I N N U M B E R 1 G T E P 2 2 T 9 G 3 5 0 1 4 6 5 G 50 501465 KEYS: 9W24 FRAME: .E16
501465

23 ENGINE: IDB:V2F223 DATE SHIPPED: 86/02/27 DATE OF EXECUTION: 86/02/27 *LAST*

DESCRIPTION	LIST	D&H	INV PRICE	TOTAL
VALUE VAN STEEL	14338.00	.00	12373.69	12373.69
STL VAL VAN BODY	.00	.00	.00	.00
66 AMP DELCO GEN	22.00	.00	18.70	18.70
4-SPD MAN TRANS	.00	.00	.00	.00
FLT ORDER OPT	.00	.00	.00	.00
LT215/85R-16C TB	.00	.00	.00	.00
FLEET INCENTIVE	.00	.00	800.00-	800.00-
CHARGE			610.00	610.00
ICE	14413.00	.00	12247.84	12247.84
				.00
				432.39
CES (LESS ADVERTISING & HOLDBACK)				11815.45
50-332				
TON TRUCK SALES, INC.		DALTON		GA

ILLEGIBLE

RPO	C	DESCRIPTION	LIST	D&H	INV PRICE	TOTAL
B3W010	R	PRELIM PRICE IN	.00	.00	.40	.40
GT4010	R	REAR AXLE 3.73	.00	.00	.00	.00
L25010	R	4.8 LITER L6 EN	.00	.00	.00	.00
UA1020	R	HD BATTERY	53.00	.00	45.05	45.05
XYJ020	T	LT215/85R-16C T	.00	.00	.00	.00
ZY1010	R	SOLID PAINT	.00	.00	.00	.00
12U010	R	12 FROST WHITE	.00	.00	.00	.00

INVOICE #: 5A603508347 RAIL CAR #:DT TWT: 0.00
TERMS: GMAC SALES CLASS: 13C MCO WGHT: 5650 CE DEAL:
BUILT DATE: 86/02/11 PREP TIME: .50 EZ SPEC:
NOTE DATE: 86/03/01 RETAIL DELVRY: 50-332 86/04/17
INTEREST FROM DATE: 86/03/01 WARRANTY DELVRY: 00/00/00
TIRE BRANDS: GOODR-GOODR-GOODR 121/65 SHIP-TO CODE: 71-538
SHIP-TO: AMTRALEASE JEFFERSON LA

CREDIT AND DEBIT ACTIVITY

TYPE	TYPE DESCRIPTION	DOC #	REQUEST #	D&H	AMOUNT	TOTAL	DEALER
VQ1	FLEET ASSISTANCE PROGRAM DGL 2	5P604791462	93102313	.00	150.00-	150.00-	50-332
HBK	DEALER HOLD BACK	5P607222747	A603508347	.00	432.39-	432.39-	50-332

000469

UIRY FOR VIN 1 G T E P 2 2 T 9 G 3 5 0 1 4 6 5 DEPARTMENT
NIE BROUGH BIRSA PRODUCT SERVICE

N YEAR	G	BUILT DATE	86/02/11
ANT CODE	3	ORIG. SHIP DATE	86/02/27
ANT NAME	DETROIT PLANT	ORIG. INVOICE DATE	86/02/27
I.N.	1GTEP22T9G3501465	CURR. INVOICE DATE	00/00/00
DEL CODE	TP 20842 020	CURR. TRANSFER DATE	00/00/00
RIAL NUMBER	501465	RETAIL SALE(GMT1160):	86/04/17
D. NUMBER	V2F223	OUT OF SERVICE DATE	00/00/00
DER NUMBER	V2F223	WAREHOUSE DATE	00/00/00
DEL YEAR	1986	DEALER PREP VOID DT	00/00/00
T1160 REPORT DT	86/04/20	DEALER ORDER DATE	85/11/04
SERVICE MILES	00400	ORDER RECVIEVED DATE:	00/00/00
CATIONAL INFO.	2- -0-A-	IN SERVICE DATE	86/04/17
UNT TO W.I.C.	0	LINE NUMBER BUILT ON:	
GINE SERIAL #		KEY NUMBER 1	9W24
-SPEC ORDER #		KEY NUMBER 2	
RE MANUFACTURER1:	BA-GOODRICH	TOTAL INVOICE AMOUNT:	$12,247.84
RE MANUFACTURER2:	BA-GOODRICH	TOTAL INVOICE BASE	$12,983.69
RE MANUFACTURER3:	BA-GOODRICH	TOTAL INVOICE OPTION:	$735.85-
W RATING (LBS.)	6,800	AMA TONNAGE CODE	U
UCK WEIGHT (LBS):	5,650	OUT OF SERVICE CODE	
ECIAL ORDER #		PRODUCT TYPE CODE	1-GMC UNIT
IVELINE NUMBER		WARRANTY CMS MICRO#	0000000
IL CAR NUMBER		ROUTING CODE	DT
ISE CODE ASSN"ED:	0000000	DLR PREP INVOICE HRS:	0.5
GINEERING YEAR	6	ELIGIBLE-DEALER PREP:	YES
DER TYPE		FACTORY PREP"ED ??	NO
VOICE TERMS	G GMAC TERMS	SPECIAL BILLING CODE:	
GINEERING BOOK	03	ORIG. BAIL./POOL DLR:	
TAL OPTION COUNT:	32	INVOICE NUMBER	5A603508347
T CUSTOMER NAMES:	01	PAID WARRANTY CASES	0
T OF CAMPAIGNS	00	PAID DLR PREP CASES	0
ECIAL OPTIONS	NO	DETAIL WARRANTY CNT	0
W INFO. PRESENT	NO	CANCELLED CASE COUNT:	0
TE LAST UPDATED	88/01/30	COACH INFO. PRESENT?	NO

RIG. CLASS OF SALE D- 13C CLASS DESCRIPTION: DEALER SALE
CTG. PRODUCT CODE 051 DECR: LIGHT- FORWARD CONTROL (P MODEL: GAS

RIG. INVOICE DEALER G 50 332 DALTON TRUCK SALES, INC.
ZONE :MEMPHIS ZONE P.O. BOX 1677
DALTON GA 30720

URR. SHIP-TO DEALER Z 71 538 AMTRALEASE
ZONE :NOT DEFINED 670 ST GEORGE ST
JEFFERSON LA 70185

ETAIL DEALER(GMT1160): G 50 332 DALTON TRUCK SALES, INC.
ZONE :MEMPHIS ZONE P.O. BOX 1677
DALTON GA 30720

000470

.UIRY FOR . VIN 1 G T E P 2 2 T 9 G 3 5 0 1 4 6 5 DEPARTMENT .
NIE BROUGH BIRSA PRODUCT SERVICE

TION TION	C C	ECS #	ST #	A V	FAM COD	OPTION DESCRIPTION
3W010	R	00000			VAT	ADVANCE PRICE SHEET-
5U010	R	00000			GVW	GVW RATING-6800 LBS.
ET010	R	00000			PLT	PLANT CODE-DETROIT, MI, BOC.
1Y010	R	00000			SFG	GEAR-SPEEDO DRIVEN_(3866798).
32010	R	00000			BDS	BODY EQUIPMENT-FORWARD CONTROL_VAR 3.
5Z010	R	00000			SPA	ADAPTER-SPEEDO-----DELETE
.6W010	R	00000			SPS	SLEEVE-SPEEDO (326562).
:9Z010	R	00000			SPK	KEY-SPEEDO---DELETE-
LT010	R	00000			XXX	FLEET PROCESSING-OPTION
:Q1010	R	00000			XXX	AXLE REAR-STD RATIO.
:T4010	R	00000			AXL	AXLE REAR-3.73 RATIO
B6010	R	00000			BRK	BRAKE-POWER DISC, DRUM_7200 LBS.
.81020	R	00000			GEN	GENERATOR-66 AMP-
25010	R	00000			ENG	ENGINE-GAS, 6 CYL, 4.8L, 1BBL.
1M4010	R	00000			MTC	TRANSMISSION-MAN 4 SPD PROVISIONS.
120010	R	00000			TRN	TRANSMISSION-MAN 4 SPD, 117MM, 6.55 1ST
1A5010	R	00000			EMS	EMISSION SYSTEM-FEDERAL REQUIREMENTS
1A9010	R	00000			XXX	EMISSION SYSTEM-EVAPORATIVE.
1A1020	R	00000			BAT	BATTERY-HIGH-CAPACITY,WET
'Q1010	R	00000			XXX	FLEET PROGRAM-DEALER-ASSISTANCE, WITH HOLD BACK
'73010	R	00000			VCS	VEHICLE STATEMENT-US-
2YJ020	T	00000			FTR	TIRE FRONT-LT215/85R16/C BL_R/PE ST TL HWY_(959079
'D3010	R	00000			XXX	AXLE FRONT-(BASE EQUIP) FOR_SCHEDULING GVW PLATE.
'D5010	R	00000			XXX	SPRING FRONT-BASE EQUIPMENT
'D6010	R	00000			XXX	SPRING REAR-BASE EQUIPMENT
'C2010	R	00000			XXX	SPECIAL BODY OPTIONS-REQUIRED.
2YJ030	T	00000			RTR	TIRE REAR-LT215/85R16/C BL_R/PE ST TL HWY_(9590793
2Y1010	R	00000			CCC	COLOR COMBINATION-SOLID.
263010	R	00000			XXX	SALES INCENTIVE-FLEET #1_(BEFORE NOV. 15
288010	R	00000			XXX	CONVERSION-GMC-
12U010	R	00000			CCU	EXTERIOR COLOR-PRIMARY,SILVER MET
10842020	C					CHASSIS OPTION

--><--> NO SPECIAL OPTIONS ON THIS UNIT <---<---

000471

JIRY FOR . VIN 1 G T E P 2 2 T 9 G 3 5 0 1 4 6 5 DEPARTMENT .
IE BROUGH BIRSA PRODUCT SERVICE

---------- PAID DEALER NEW VEHICLE PREPARATION INFORMATION ----------

->---> NO DEALER PREPARATION PAID ON THIS UNIT <---<---

---------- PAID DEALER WARRANTY CASE INFORMATION ----------

->---> NO DEALER WARRANTY CASES PAID ON THIS UNIT <---<---

TAL VEHICLE WARRANTY EXPENSE $.00

000472

IRY FOR . VIN 1 G T E P 2 2 T 9 G 3 5 0 1 4 6 5 DEPARTMENT .
IE BROUGH BIRSA PRODUCT SERVICE

PAID DEALER WARRANTY DETAIL INFORMATION

>---> NO DEALER WARRANTY DETAIL ON THIS UNIT <---<---

JIRY FOR . VIN 1 G T E P 2 2 T 9 G 3 5 0 1 4 6 5 DEPARTMENT .
'IIE BROUGH BIRSA PRODUCT SERVICE

CAMPAIGN CURRENT DEALER RESPONSIBLE INFORMATION

RRENT DEALER RESP. . G 50 332 DALTON TRUCK SALES, INC.
ZONE :MEMPHIS ZONE P.O. BOX 1677
FECTIVE DATE OF CH 86/04/17 DALTON GA 30720

CAMPAIGN INFORMATION

->---> NO CAMPAIGNS PRESENT ON THIS UNIT <---<---

CUSTOMER NAME INFORMATION

TAIL DEALER(GMT1160): G 50 332 DALTON TRUCK SALES, INC.
ZONE :MEMPHIS ZONE P.O. BOX 1677
DALTON GA 30720

TAIL SALE DATE CUSTOMER NAME TRUCK RENTAL OF LOUI
/04/17 CUSTOMER ADDRESS #4 S 32ND ST
MES: POINTS:N CUSTOMER CITY,STATE . BIRMINGHAM AL 352330000
STOMER NAME TYPE . 2 DESCR FIRST RETAIL CUSTOMER NAME - GMT1160 CARD
STOMER NAME SOURCE: Z DESCR MANUAL INPUT FROM SYSTEMS DEVELOPMENT

000474

MAIL # 34

MAIL DATED 06/13/88 AT 08:52:08
FROM: GERRY H COMPAGNONI

SUBJECT: CONTACT REPORT-ROLLINS LEASING-JUNE 9,1988

TO: JAMES B OIFFIN
PAUL F BIRSA
RAYMOND J MOTS

CC: WILLIAM W VETTER/TBENG
EDWARD L PAULY/TBENG

OBJECTIVE: TO CONFIRM REPORTED LOWER BALL JOINT SEPARATION AND CRACKING OF THE LOWER CONTROL ARM ON 1986 P-25 MODELS OPERATED BY ROLLINS LEASING, NEW ORLEANS, LA.

DISCUSSION: TEN UNITS LEASED TO LEIDENHEIMER BAKING (ZIP BREAD) OPERATE IN THE NEW ORLEANS AREA, FOUR OF WHICH HAVE EXPERIENCED LOWER CONTROL ARM CRACKING REQUIRING REPLACEMENT. MILAGES RANGE FROM 20 TO 45000 WITH BOTH LEFT AND RIGHT ARMS FOUND TO HAVE CRACK INIATION OR LOWER BALL JOINT REPARATION. A LOADED FOR DELIVERY UNIT COULD NOT BE OBTAINED FOR WEIGHING, HOWEVER THE FLEET REPORTS A TYPICAL LOAD DOES NOT EXCEED 5 TO 600 LBS. AN EMPTY UNIT SCALED OUT AT 5460 WITH GVW AT 6800. ALL OF THE UNITS ARE POWERED BY L6-4.8L ENGINES AND OVERALL ARE WELL MAINTAINED BY THE DRIVERS AND FLEET. ALL FAILURES HAVE BEEN AT LOW SPEEDS OR WHILE PARKING. THREE OF THE REPLACEMENTS WERE LOWER LEFT (P/N 14026581) AND ONE WAS A RIGHT(14026582).

EACH UNIT IS INSPECTED FOR LOWER CONTROL ARM INTEGRITY AS PART OF THEIR PM SCHEDULE AND REPLACED WITH NEW MATERIAL PURCHASED FROM THE LOCAL CHEVROLET DEALER.
SUMMARY: COMPLETED VEHICLE EVALUATION SHEETS ARE ON FILE AND SUPPLEMENTAL PHOTOGRAPHS ARE AVAILABLE. THREE FAILED LCA'S ARE BEING RETURN SHIPPED TO THE SERVICE LAB FOR ANALYSIS.

000475

To P. Birsa 6-23-88

From R. Mots

Subject- Rollins Lease-Leidenheimer Bakery units (11 serial number list attached) front suspension "A' arm breakage. 4 left side, 1 right side.

Contacted Rollins people Mr. R. Richardson, Service Manager and Mr. M. Westin, Foreman at there New Orleans shop to inspect failed material and units in operation.

Inspected 2 pieces of failed material, 1-left side 'A"arm unit #400517 (67472),serial 1GTEP22T9G3501465 failed at 34,403 miles 4-21-88. Ball section missing, cracked across ball retaining area. See pictures forwarded.
1 right side 'A' arm unit #400524 (67479) serial 1GTEP22T3G350512 failed at 45,836 miles 1-8-88. Ball section still retained in arm cracked diagonally to base of "A' arm. See pictures enclosed.

Packaged failed material shipped via UPS to service lab. your attention 6-22-88.

Forwarding pictures of three vehicles inspected (#400515-67470,#400518-67473,&#400519-67474) showing wheel damage from hitting curbs and other objects,tire wear and bruises, also body damage. Talked to Leidenheimer driver Mr. J. Mathews unit # 67473, he stated these units are subjected to severe operation conditions in the city and local township deliveries. This unit failed the left side 'A' arm material being returned.

Inspection of failed material and unit conditions as described above, I do not feel that the load factor is contributing to the failure of these components.
The major contributing cause is the operating condition they are subjected to and probable maintenance factors.
Maintenance on these units will change as this operation was currently purchased from HERTZ and will shortly being moving into new facilities.

Please advise of engineerings findings on returned material, so we may resolve this matter with Rollins Leasing.

001476

Randy Richardson
[redacted]
Service Manager

Rollins Truck Leasing

351
Jefferson, LA 70121 (504) 837 5500

[illegible]	[illegible]	[illegible]	Rental	GHA 23153 1HTLDUXP5						Sold to [illegible] Lease 10/16/[illegible]
[illegible]	[illegible]	[illegible]	~~Dolgen Dist~~	36752 1HTLAHEMBAHA						
[illegible]	[illegible]	[illegible]	McDonald [illegible]	55634 1FTJE3415GHB						
1462	400504	"	Liberto Cleaners	02929 1FTCA15076ZB						
	400511	22' VAN	Rental	024467 VG6M111B5FB	85' Mach	29,000	B184980	6/2/86		transferred to Pensacola
1443	400512	"	Rental ~~Healy Sup. Rent~~	024477 VG6M111B8FB		"	B184982	6/18/86		
1444	400513	"	Rental	024486 VG6M111B9FB	"	"	B184981	6/2/86		
1469	400514	Step VAN	Leidenheimer Bakery	3501431 1GTEP22T3G	86' Gmc	10,000	B195866	4/23/86	[illegible]	
470	400515	"	Leidenheimer B.	3501439 1GTEP22T8G	86' Gmc	"	B195867	4/24/86		
471	400516	"	"	3501441 1GTEP22T6G	86' Gmc	"	B195869	4/23/86		
1472	400517	+31.88 "	34403 miles *L/S "	3501465 1GTEP22T9G	"	"	B195876	"		
473	400518	"	"	3501478 1GTEP22T7G	"	"	B195870		[illegible]	
1474	400519	"	"	3501479 1GTEP22T9G	"	"	B195871		[illegible]	
475	400520	"	Leidenheimer B.	3501480 1GTEP22T5G	86' Gmc	10,000	B195872	"		
1476	400521	"	"	3501482 1GTEP22T9G	"	"	B195873	4/28/86		
477	400522	"	"	3501484 1GTEP22T2G	"	"	B195874	"		
478	400523	"	"	3501511 1GTEP22T1G	"	"	B195868	4/29/86		
1479	400524	Step VAN	1388 *L/S " 45836 miles	3505120 1GTEP22T3G	"	"	B195875	4/28/86		
	400528	Econ.	Gulf So. – B.R.				B196064			Baton Rouge Unit

B.R. Unit

000477

Rollins Leasing Corp.

INVOICE NO.

LS 69105
L5069105

REMIT TO: P.O. BOX 744
METARIE LA 70004
504-837-5500

TO: G H LEIDENHEIMER BAKING
1501 SIMON BOLIVAR
NEW ORLEANS LA 70125

Milea 1/6 1-88

DUE UPON RECEIPT

REV. CODE	D-R-B NO.
	501

DATE	LESSEE NO.	CUST. PURCH. O.#
06/01/88	35170	

RENTAL PERIOD	UNIT NUMBER	SPEEDOMETER START	SPEEDOMETER END	MILES TRAVELED	SERVICE MILES	CHARGEABLE MILES	MILEAGE RATE	MILEAGE CHARGE	FIXED CHARGE	TOTAL CHARGE	STATE CODE #	SALES TAX	TOTAL CHARGES
06/01 06/30	67469								542.71	542.71	17	43.42	586.13
05/01 05/31	67469	42161	44017	1856		1856	.0612	113.59		113.59	17	9.08	122.67
06/01 06/30	67470								542.71	542.71	17	43.42	586.13
05/01 05/31	67470	39878	41450	1572		1572	.0612	96.21		96.21	17	7.70	103.91
06/01 06/30	67471								542.71	542.71	17	43.42	586.13
05/01 05/31	67471	23407	25942	2535		2535	.0612	155.14		155.14	17	12.42	167.56
06/01 06/30	67473								542.71	542.71	17	43.42	586.13
05/01 05/31	67473	42744	45390	2646		2646	.0612	161.94		161.94	17	12.96	174.90
06/01 06/30	67478								542.71	542.71	17	43.42	586.13
05/01 05/31	67478	68972	74272	5300		5300	.0612	324.36		324.36	17	25.94	350.30
06/01 06/30	67479								542.71	542.71	17	43.42	586.13
05/01 05/31	67479	53860	55860	2000		2000	.0612	122.40		122.40	17	9.80	132.20
							SUB-TOTAL	973.64	3256.26	4229.90		338.42	4568.32

PAY THIS AMOUNT 4568.32

DATE CHECK RECEIVED	CHECK NO.	CHECK AMOUNT	DATE CHECK RECEIVED

REMINDER — INVOICE PAYMENT IS DUE 10 DAYS FROM DATE OF INVOICE

BRANCH LESSEE COPY—FILE IN LESSEE FILE WHEN CHECK SENT TO G.A.O.

UNIQUE FORMS INC., WILMINGTON, DELAWARE

RLC 1077 8/84

000478

Rollins Leasing Corp.

REMIT TO: P.O. BOX 744
METAIRIE LA 70004
504-895-0694

INVOICE NO.
LS 69143
LS069143

REV. CODE	D-R-B NO.
	502

TO: G H LEIDENHEIMER BAKING
1501 SIMON BOLIVAR
NEW ORLEANS LA 70125

DUE UPON RECEIPT

DATE	LESSEE NO.	CUST. PURCH. O.#
06/01/88	35170	

RENTAL PERIOD		UNIT NUMBER	SPEEDOMETER START	SPEEDOMETER END	MILES TRAVELED	SERVICE MILES	CHARGEABLE MILES	MILEAGE RATE	MILEAGE CHARGE	FIXED CHARGE	TOTAL CHARGE	STATE CODE #	SALES TAX	TOTAL CHARGES
06/01	06/30	67472								542.71	542.71	17	48.85	591.56
05/01	05/31	67472	40380	41820	1440		1440	.0613	88.13		88.13	17	7.94	96.07
06/01	06/30	67474								54[illegible].71	542.71	17	48.85	591.56
05/01	05/31	67474	54186	54186				.0613				17		.00
06/01	06/30	67475								542.71	542.71	17	48.85	591.56
05/01	05/31	67475	55523	65336	9812		9812	.0614	600.49		600.49	17	54.04	654.53
06/01	06/30	67476								54[illegible].71	542.71	17	48.85	591.56
05/01	05/31	67476	52710	53423	713		713	.0614	43.64		43.64	17	3.93	47.57
06/01	06/30	67477								54[illegible].71	542.71	17	48.85	591.56
05/01	05/31	67477	53847	67856	13809		13809	.0613	845.11		845.11	17	76.06	921.17
								SUB-TOTAL	1577.37	27[illegible].55	4290.93		386.22	4677.14

PAY THIS AMOUNT ▶ 4677.14

DATE CHECK RECEIVED	CHECK NO.	CHECK AMOUNT	DATE CHECK RECEIVED

REMINDER — INVOICE PAYMENT IS DUE 10 DAYS FROM DATE OF INVOICE

BRANCH LESSEE COPY—FILE IN LESSEE FILE WHEN CHECK SENT TO G.A.O.

UNIQUE FORMS INC., WILMINGTON, DELAWARE

RLC 1077 8/84

000479

Rollins Leasing Corp.

REMIT TO: P.O. BOX 744
METAIRIE LA 70004
504-837-5500

INVOICE NO.
LS 69085
LS069085

REV. CODE	D.R.B. NO.
	501

TO: G H LEIDENHEIMER BAKING
1501 SIMON BOLIVAR
NEW ORLEANS LA 70125

DUE UPON RECEIPT

DATE	LESSEE NO.	CUST. PURCH. O. #
06/01/86	35178	

INV. PERIOD	UNIT NUMBER	SPEEDOMETER START	SPEEDOMETER END	MILES TRAVELED	SERVICE MILES	CHARGEABLE MILES	MILEAGE RATE	MILEAGE CHARGE	FIXED CHARGE	TOTAL CHARGE	TAX CODE	SALES TAX	TOTAL CHARGES
05/01 06/31	67660	100798	101498	700		700	.0612	42.84		42.84	17	3.42	46.26
							SUB-TOTAL	42.84		42.84		3.42	46.26
												PAY THIS AMOUNT ▶	46.26

DATE CHECK RECEIVED	CHECK NO.	CHECK AMOUNT	DATE CHECK RECEIVED

REMINDER — INVOICE PAYMENT IS DUE 10 DAYS FROM DATE OF INVOICE

BRANCH LESSEE COPY—FILE IN LESSEE FILE WHEN CHECK SENT TO G.A.O.

UNIQUE FORMS INC., WILMINGTON, DELAWARE
RLC 1077 8/84

000480

Public File

ENGINEERING ANALYSIS CLOSING REPORT

SUBJECT: Lower Control Arms

EA No. 88-007 Date Opened: 6-NOV-87 Date Closed: OCT 24 1988

BASIS: This Engineering Analysis was initiated by the Office of Defects Investigation (ODI) on November 6, 1987, based on a finding during PE87-056 indicating that cracks were developing in the left lower control arm of "30" series light duty trucks.

THE ALLEGED DEFECT: Blanks used for the base control arm stamping and built between July 26, 1984, and July 1, 1986, incorporate a less than specified radius at the transition area from the rear flange to the ball joint pad. Vehicle dynamic loads in service may initiate cracks at the improper transition area. Continued load cycling can cause the crack to propagate across the ball joint pad. If the crack is not detected during vehicle maintenance and allowed to progress, separation of the ball joint or ball joint end of the control arm could occur, resulting in a possible loss of vehicle control.

DESCRIPTION OF COMPONENT OR VEHICLE SYSTEM: The subject of this investigation is the left (driver's side) lower control arm of the vehicle's front suspension. The suspension system consists of upper and lower control arms pivoting on steel threaded or rubber bushings on upper and lower control arm shafts. The lower control arms are attached to the crossmember. The upper arms are connected to the steering knuckle through pivoting ball joints. A coil spring is located between the lower control arm and a formed seat in the suspension crossmember, thus the lower control arm is the load carrying member. Double acting shock absorbers are also attached to the rear of the lower control arms and connect to the frame.

A standard and heavy duty suspension system are available on the subject vehicles. Although both systems are identical in the ball joint attachment area, the heavy duty arms (see Figure 1) are reinforced. Additionally, the "C," "R," and "G" models have an air spring inside the coil springs.

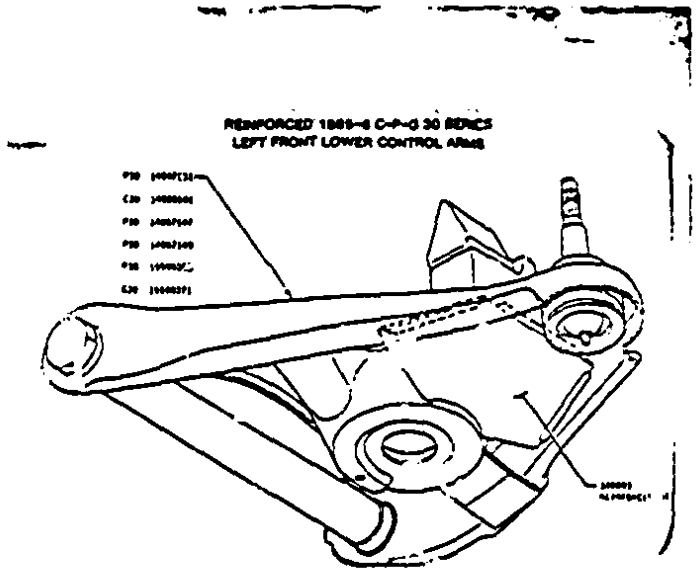

Figure 1

0000481

CORRESPONDENCE:

NHTSA to Mfg.	Mfg. to NHTSA	Mfg. to NHTSA Supplement	Confidentiality Date Requested	Confidentiality Date OCC Response	Confidentiality Items Confidential
11-SEP-87	22-OCT-87				NONE
19-NOV-87	29-JAN-88	31-MAR-88			NONE
		6-JUL-88	29-JAN-88	24-MAR-88	ATTCH "E"
26-JUL-88	20-SEP-88				NONE

STATUS

PROBLEM EXPERIENCE:	EA Opened		EA Closed	
Reports	ODI	MFG	ODI	MFG
Owner	1/1	1	2	7
Field	0	5	0	25/2
Lawsuits	0	0	0	0
Property Damage Accidents	0	0	0	3/3
Injury Accidents/ Injuries	0	0	0	2
Fatal Accidents/ Fatalities	0	0	0	0
Unknown Accidents	0	0	0	0

/1 Original ODI report was from a fleet owner and pertained to nine incidents of control arm failure.
/2 Twenty-five reports represent 27 VIN's.
/3 Three single vehicle accidents - two involving collisions with fixed objects, third involving suspension damage only. Both known injuries are minor.

VEHICLE POPULATION: Total population for vehicles in this investigation: Chevrolet - 436,181 GMC - 120,238
Population of vehicles built with the improperly formed control arm blank: Chevrolet - 344,528 GMC 96,699
The subject vehicles include a wide population of pickups, chassis cabs, vans, buses, hi-cube vans, commercial forward control chassis and motor home chassis. These vehicles have a wide range of gross vehicle weight ratings, axle ratings and vehicle use. The above population figures include 162,869 "20" series (3/4 ton) vehicles which were built with the misformed control arm blank. Three quarter ton vehicles were not targeted during this investigation, as ODI is not aware of any failures involving unmodified 3/4 ton vehicles.

WARRANTY: Warranty replacements for the subject control arm from January 1, 1984 to December 31, 1987, are as follows:

Division	Model Years	Model	No. of Claims
Chev	1984 - 1986	C30	26
Chev	1984 - 1987	G30	40
Chev	1984 - 1987	P30	46
Chev	1987	R30	11
GMC	1984 - 1986	C30	13
GMC	1984 - 1987	G30	19
GMC	1984 - 1987	P30	3
GMC	1987	R30	5
		Total:	162

Claims processed beyond the normal time/mileage warranty coverage:

Division	Model Years	Model	No. of Claims
Chev	1984 - 1986	C30	11
Chev	1984 - 1986	G30	14
Chev	1984 - 1986	P30	25
Chev	1987	R30	4
GMC	1984 - 1986	C30	6
GMC	1984 - 1986	G30	9
GMC	1984 - 1986	P30	3
GMC	1987	R30	0
		Total:	72

SERVICE BULLETINS: General Motors (GM) reports no service or technical bulletins have been published.

PART SALES: Part sales data are provided in Attachment "D" of GM's January 29, 1988 letter, which is available in the public file. Due to the number of years in which the control arms were utilized and the interchangability of control arm part numbers, it is difficult to identify component usage by vehicle model and year.

DESIGN, MATERIAL, AND/OR PRODUCTION MODIFICATIONS: According to GM, there were no changes in the design or material specifications for the subject lower control arms. However, the supplier of the lower control arm stamping was changed in July 1984. Subsequently, it was determined that the transition zone between the upturned flange and the ball joint pad on lower control arm stampings was smaller than shown (see Figure 2) on the stamping detail drawing. A change was made in the trim of the blank used for the stamping in July 1986, to provide the inch radius shown on the drawing.

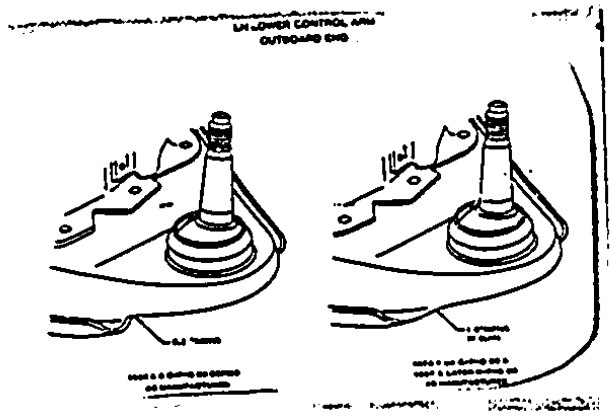

Figure 2

TESTING: ODI did not conduct any testing.

ADDITIONAL INFORMATION: In July 1988, GM announced a safety recall (88V-110) of the subject control arms in certain 1985-86 P30 model trucks with gas and diesel engines and G30 vans equipped with the 6.2 liter diesel engine. The recalled population pertained to 21,485 vehicles. In explaining their rationale for recalling the limited population of vehicles cited, GM stated that field examination of problem vehicles revealed that incidents were primarily confined to certain vehicles using the base front suspension arm at certain GVWR. These included G-30 cutaway commercial vans having diesel engines and GVWR's of 8,600 lbs. to 10,000 lbs. G-30 panel vans equipped with diesel engines and ordered for school bus usage and P-30 commercial chassis from 7,600 lbs. to 10,000 lbs. Only a small number of incidents were reported outside this vehicle population. Of these incidents, some involved either aftermarket modifications or lack of suspension maintenance which affected the control arm durability.

WARNING SYMPTOMS: Cracks in the control arm may be visible (depending on size) in a visual inspection during routine vehicle maintenance such as front suspension lubrication.

CONTRIBUTING FACTORS: Vehicle configuration, loads, use history, center of gravity, and aftermarket modifications can have a significant effect on the control arm durability. Suspension maintenance is also important. Two reports of control arm failures in G-30 vehicles revealed that the vehicles were equipped with air bag front suspensions in which the air bags were not inflated. This condition resulted in loads which were not representative for the suspension system of that class of vehicles.

FAILURE/MALFUNCTION MODES: The failure mode occurs when a crack is initiated at the improper transition area of the subject control arm. If the crack remains undetected and is allowed to propagate to the ball joint pad, separation of the ball joint or the ball joint end of the control arm could occur. This would cause the lower control arm to drop to the road surface, possibly resulting in a loss of vehicle control.

MANUFACTURER'S EVALUATION OF THE ALLEGED DEFECT: GM states "Separation of the ball joint or ball joint end of the control arm would result in the lower control arm dropping to the road surface. This condition could result in loss of vehicle control."

REASON FOR CLOSING:

On July 6, 1988, GM submitted a defect report (88V-110) which addresses suspected high risk vehicles. Lower risk vehicles will be monitored for any indication of a developing safety defect trend.

Richard P Boyd — 10/24/88
Automotive Equipment Specialist — Date

I Concur:

W H Rister — 10/24/88
Chief, Vehicle Control Branch — Date

W H Rister — 10/24/88
Chief, Defect Evaluation Division — Date

[illegible] — 10.24.88
Director, Office of Defects Investigation — Date

000C485