Dealer Operator / General Manager	Sales New Vehicles	Sales Used Vehicles	Business Manager (F&I)	Service	Parts & Accessories	Administration
Date 06/01 Bulletin # 00 06 01 Replaces		Source Parts Logistics Name Walter J. Ford Title Parts Publications Specialist Phone # 201-573-3946				

BMW Aftersales Parts Bulletin

01V-206

SUBJECT: TECH4 – RETURN OF AUXILIARY/COOLING ELECTRIC FANS

Effective immediately, please discontinue your use of the following auxiliary/cooling electric fans:

64 50 6 908 124 (E53) – ***64 50 6 908 024 (E52) (E38)*** – 17 11 7 510 086 (E46)

As of Monday, June 18, 2001, these auxiliary/cooling electric fans could be returned using the standard return section of the Dealer Return System (DRS) using the return reason code TECH4.

Only these part numbers should be returned under this code. A delivery note number is not required, but the delivery note field must be filled in (all zeros can be used). Please do not attempt to submit multiple return types with a TECH4 return.

Please place all new orders for replacement auxiliary/cooling electric fans using part numbers 64 54 6 919 051 (E53); 64 54 6 919 053 (E52) (E38) and 17 11 7 516 813 (E46).

All orders for the new auxiliary/cooling electric fans ***must be VIN specific***, since inventory is limited. When placing an order, the VIN must be used as the Purchase Order number. All backorders for the new part numbers which are not VIN-specific have been and will continue to be canceled. It is no longer necessary to contact the Parts Technical Hotline for a release of one of these parts. All orders will be reviewed regularly and those that are VIN-specific will be released. For information, please call 1-800-272-0202.

Thank you.

Printed on Recycled Paper

Very truly yours,

H.G. Duenzl
Vice President
Aftersales and Engineering

Very truly yours,

James Goldsmith
Manager
Parts Logistics

Dealer Operator / General Manager	Sales New Vehicles	Sales Used Vehicles	Business Manager (F&I)	Service	Parts & Accessories	Administration
Date: 10/01 Bulletin # 64 01 01 Replaces		Source: Parts Logistics Name: Barry Goldberg Title: Parts Communications Specialist Phone #: 1-800-272-0202				

BMW Aftersales Parts Bulletin

SUBJECT: FAN RECALL CAMPAIGN 01V-206 - UPDATE – 10-03-01

As per the DCS message from September 26, 2001, we are providing to you the customer mailed letter VIN listing. These VINs will be activated for automatic release of center-entered orders on Monday October 1, 2001.

We have attached the new VIN listing for this week's customer letter mailing. Only VIN specific center-entered orders from within this list will be automatically released. VIN ranges published prior to this list will no longer receive automatic allocation. This means that if you have an existing VIN specific order for the old VIN ranges you must call the PCG for release. If the VIN is outside the customer VIN mailing listing, the center must place an order via DCS and call the PCG at 1-800-272-0202, for release of the order.

This VIN listing may also be found on BMWTIS.NET as an attachment to Service Information Bulletin 64 07 01 and Parts Bulletin 64 01 01. As new VIN customer letter mailings occur we will revise this bulletin and inform the centers via DCS message.

Please order only the following part numbers:

Series	New Part Number
E46	17 11 7 510 617
E38	64 54 6 921 383
E39	64 54 6 921 395
E52 (Z8)	64 54 6 921 383
E53 (X5)	64 54 6 921 381

Please only use these new fans to repair: in stock vehicles before they are retailed, vehicle for which customers present recall notification letters, and vehicles with fan failures.

Kelly

Printed on Recycled Paper

Fax orders, non-VIN specific orders, and multiple quantity orders will not be accepted. Anything other than VIN specific orders will be cancelled.

DO NOT ORDER THE PARTS FOR STOCKING PURPOSES. These parts will not be accepted for return via AFA, 90-day return, or obsolescence.

We appreciate your patience and cooperation.

Very truly yours,

H.G. Duenzl
Vice President
Aftersales and Engineering

Very truly yours,

James Goldsmith
Manager
Parts Logistics

Service Information

June 2001

Heating and Air Conditioning 64 05 01 Service Engineering

PERFORM THE PROCEDURE OUTLINED IN THIS SERVICE INFORMATION ON ALL AFFECTED VEHICLES THE NEXT TIME THEY ARE IN THE SHOP FOR MAINTENANCE OR REPAIRS. Under the National Traffic and Motor Vehicle Safety Act of 1966, as amended, if there has been a recall campaign, dealers must assure that all new vehicles and new items of replacement equipment are free of safety defects and comply with all applicable Federal Motor Vehicle Safety Standards at the time of delivery to the consumer. This means that dealers may not deliver new motor vehicles or new items of replacement equipment to consumers unless the safety defect or noncompliance has been remedied before delivery.

SUBJECT

Recall Campaign 01V-206: Engine Auxiliary/Cooling Fan

MODEL

E46, 3 Series with manual transmission, produced 02/01/2001 up to 04/30/2001
E38, 7 Series from 11/01/2000 up to 01/08/2001 production
E53, X5 from 12/18/2000 up to 04/30/2001 production
E52, Z8 from 01/01/2001 up to 04/30/2001 production

SITUATION

The potential defect involves the engine auxiliary/cooling fan in certain MY 2001 BMW vehicles. Fan operation, including variable speed, is electronically controlled. It is possible for the electrical circuitry in the fan control unit to overheat and fail, causing the fan to stop operating. If this were to occur, engine overheating and subsequent engine damage could result if vehicle continues to be operated, despite the warning provided by the coolant temperature gauge.

In addition, it is possible in some cases for the failure of the electrical circuitry to cause smoldering. In the extreme case, a fire in the fan control unit, which is mounted in the fan and located in the front of the engine compartment, could occur. This could happen either while the engine is running, or after the ignition has been switched off, since fan may run for up to 11 minutes after engine shutdown.

AFFECTED VEHICLES

This Recall Campaign involves certain Model Year 2001 E46 with manual transmission, and certain E38, E53, and E52 vehicles.

Please initial and route to the following for information before filing											
X	Service Manager		X	Warranty		X	Service Technicians - Initial Below				
X	Service Advisor			Parts Mgr.							
X	Service Advisor			Body Shop							
X	Shop Foreman			PDI Dept.							

★ ★ FIX IT RIGHT THE FIRST TIME, ON TIME, EVERY TIME ★ ★

For administrative convenience and to reduce costs, this bulletin may contain repair procedures for authorized BMW car centers and/or authorized BMW SAV centers. All references to SAVs and/or the X5 are ONLY intended for authorized BMW SAV centers. Furthermore, ONLY BMW SAV centers are authorized to perform repair and service work on SAVs.

© 2001 BMW of North America, LLC

by: VO

In order to determine if a specific vehicle is affected by this Recall Campaign, it will be necessary to utilize the "Service Menu" of the DCS (Dealer Communication System). Based on the response of the system, either proceed with the corrective action or take no further action.

The Chassis Number Ranges listed below are only for informational purposes and are not to be considered as the only deciding factor.

Model	Chassis Number Range
740i	DN85210 – DN85835
740iLA	DP25926
	DP25931
	DP25952
	DP25960
	DP25971 – DP27906
750IL	DD74561
	DD74573 – DD74648
750iLP	DE35040
	DE35041
Z8	AH60509 – AH60914
325i	EE25793
	EE25839 – EE25842
	EE25935 – EE25962
	EE26118
	EE26146
	EE26157 – EE26161
	EE26171 – EE26197
	EE26247
	EE26254
	EE26362
	EE26368
	EE26379
	FV02938 – FV02941
	FV03009 – FV04147
	NE55308
	NE55319
	NE55323 – NE55329
	NE55343 – NE55351
	NE55360 – NE56038
325iT	EN80415 – EN80589
325Ci	JW48557
	JW48903 – JW49866
325Ci convertible	JY40799
	JY40945 – JY41521

330i	FT01376 – FT01378 FT01429 – FT02195
330xi	JR79731 JR79736 – JR80196
330Ci	JU23264 – JU24231
330Ci convertible	EV86726 – EV86727 EV86827 – EV87456
X5 4.4i	LH14482 LH14699 LH14746 LH14760 LH14778 LH14853 LH14886 LH14899 LH14958 LH14985 – LH22080
X5 3.0i	LH78923 – LH79274
X5 3.0iA	LM76123 LM77243 LM77601 LM77632 LM77649 LM77732 LM77754 LM77788 LM77796 LM77842 – LM77844 LM77921 LM77935 LM77956 LM78020 LM78041 – LM85821

CORRECTION

Due to the limited availability of parts, customer notification mailings will be sent out in stages to ensure adequate parts supply for customers receiving notification letters.
On the affected vehicles check the part number on the electric fan shroud, and replace the fan/shroud assembly if necessary.

The Customer Notification Letter is attached.

PROCEDURE

E38, 7 Series vehicles:

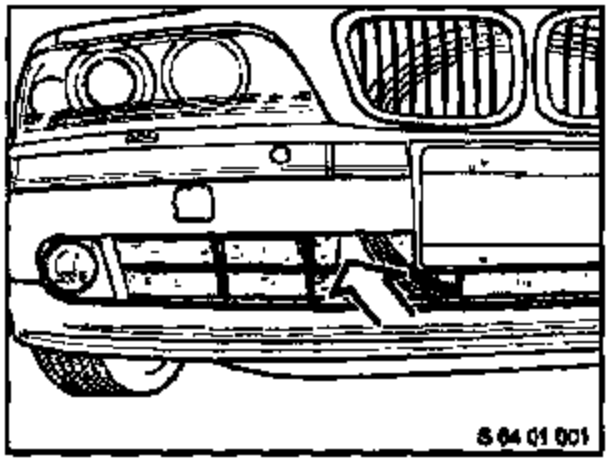

1. Check the BMW part number on the fan/shroud assembly. The part number is located on the lower right side of the shroud (molded next to the BMW logo, or on the label printed next to the logo). The number can be read from the outside, through the lower radiator grille (location indicated on the illustration).

   If the part number is: 64 54 6 919 053, then NO further action is required.

   If the part number differs from that listed, then continue with step 2.

2. Remove front bumper. For removal/installation instructions refer to RA 51 11 000 (which can be found in the BMW Technical Information System – TIS).
3. Remove air-guiding ducts in front of radiator.
4. Replace electric auxiliary fan/shroud assembly.
5. Reinstall all removed components.

E46, 3 Series (with manual transmission) vehicles:

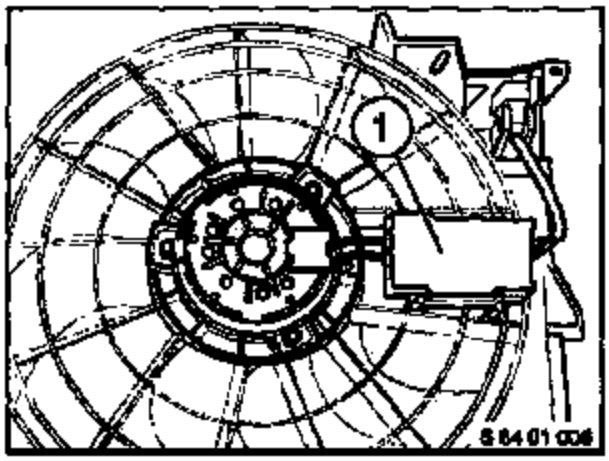

1. Check whether a fan with an external electronics box has been installed in the vehicle. The housing for the external electronics is installed on the fan shroud, between the fan and the engine block (1).

   If the electric fan with external electronics has been installed, then NO further action is required.

   If the electric fan with internal electronics has been installed, then continue with step 2.

2. Remove electric fan/shroud assembly. For removal/installation instructions refer to RA 17 11 031 (which can be found in the BMW Technical Information System – TIS).
3. Check the BMW part number on the fan/shroud assembly. The fan's part number can be found in the lower left corner of the shroud (molded next to the BMW logo, or on the label printed next to the logo).
   If the part number is 17 11 7 516 813, then NO further action is required. Reinstall all previously removed components.

   If the part number differs from that listed, then the electric fan has to be replaced with the improved unit.

E52, Z8 vehicles:

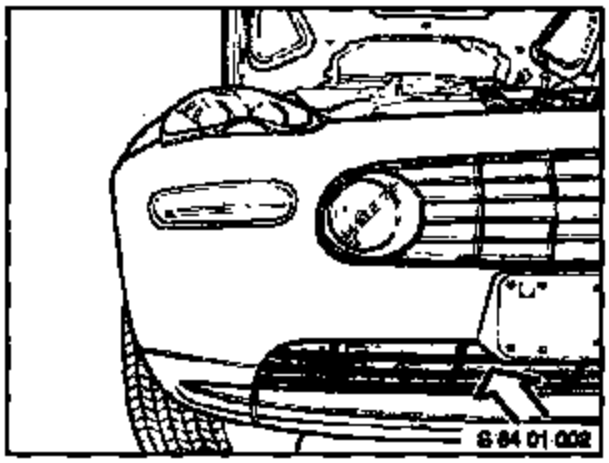

1. Check the BMW part number on the fan/shroud assembly. The part number is located on the lower right side of the shroud (molded next to the BMW logo, or on the label printed next to the logo). The number can be read from the outside, through the lower radiator grille (location indicated on the illustration).

   If the part number is: 64 54 6 919 053, then NO further action is required.

   If the part number differs from that listed, then continue with step 2.

2. Remove top radiator cover and center air-guiding ducts
3. Disconnect electrical connector to the auxiliary fan.
4. Replace electric auxiliary fan/shroud assembly.
5. Reinstall all removed components.

E53, X5 vehicles:

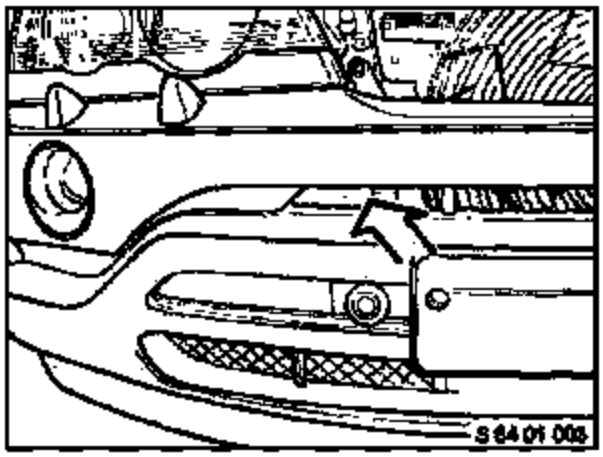

1. Check the BMW part number on the fan/shroud assembly. The part number is located on the lower right side of the shroud (molded next to the BMW logo, or on the label printed next to the logo). The number can be read from the outside, through the gap between bumper trim and the cover (location indicated on the illustration).

   If the part number is: 64 54 6 919 051, then NO further action is required.

   If the part number differs from that listed, then continue with step 2.

2. Replace the auxiliary fan. For removal/installation instructions refer to RA 17 40 000 ("Removing and refitting/replacing complete auxiliary fan M62, M54"), which can be found in the BMW Technical Information System – TIS.

PARTS INFORMATION

Part Number	Description	Quantity
64 54 6 919 053	Pusher fan E38/E52 vehicles	1
17 11 7 516 813	Cooling fan E46 w. manual trans.	1
64 54 6 919 051	Pusher fan E53 vehicles	1

Every BMW center will receive an initial allocation of the improved parts.

Ordering Information:
As soon as the automatic parts shipment takes place, all existing back orders will be cancelled. After the automatic parts shipment, the only orders that will be accepted are VIN specific, single line VOR orders.

The parts allocation will be coordinated with the customer notification process.

LABEL INSTRUCTIONS

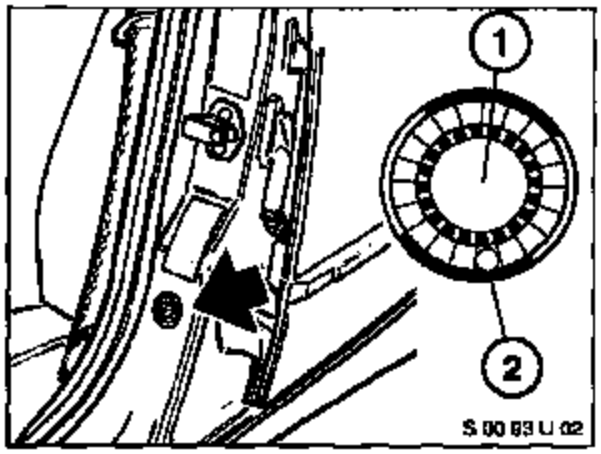

This Recall Campaign has been assigned code number **312**. After the vehicle has been checked, and corrected if necessary, obtain a label (SD 92-170) and:

a. emboss your BMW dealer warranty number in the middle of the label (1);

b. punch out code number **312** printed on the label and,

c. affix the label to the **B** pillar as shown.

If the vehicle already has a label from a previous Service Action/Recall Campaign, affix the new label next to the old one. Do not affix one label on top of another one because a number from an underlying label could appear in the punched-out hole of the new label.

WARRANTY INFORMATION

Reimbursement for this Recall Campaign will be provided through Campaign Entry.

Defect Code **00 64 32 01 00**

Work Package #1: Check electric fan part number only (all models)

Labor Operation: 00 53 026
Labor Allowance: 5 FRU

Work Package #2: Check and replace auxiliary/cooling fan on E38 (740i/iL with headlight washing - SRA only), E46, E52, & E53 vehicles

Labor Operation:	00 53 028	E38 (740i/iL with SRA only)
Labor Allowance:	11 FRU	
Parts Allowance:	64 54 6 919 053 – Pusher fan; Qty.= 1	
Labor Operation:	00 53 027	E46
Labor Allowance:	5 FRU	
Parts Allowance	17 11 7 516 813 – Cooling fan; Qty.= 1	
Labor Operation:	00 53 027	E52 (Z8)
Labor Allowance:	10 FRU	
Parts Allowance:	64 54 6 919 053 – Pusher fan; Qty.= 1	
Labor Operation:	00 53 027	E53
Labor Allowance:	24 FRU	
Parts Allowance	64 54 6 919 051 – Pusher fan; Qty.= 1	

Work Package #3: Check and replace auxiliary/cooling fan on E38, E53 vehicles with PDC <u>and</u> headlight washing system (SRA)

Labor Operation:	00 53 030	E38 (all 750iL & 740i/iL w/PDC & SRA)
Labor Allowance:	12 FRU	
Parts Allowance:	64 54 6 919 053 – Pusher fan; Qty.= 1	
Labor Operation:	00 53 030	E53 (w/PDC & SRA)
Labor Allowance:	26 FRU	
Parts Allowance	64 54 6 919 051 – Pusher fan; Qty.= 1	

Work Package #4: Check and replace auxiliary/cooling fan on E53 with PDC only

Labor Operation:	00 53 028	E53 (w/PDC only)
Labor Allowance:	25 FRU	
Parts Allowance	64 54 6 919 051 – Pusher fan; Qty.= 1	

Work Package #5: Check and replace auxiliary/cooling fan on E53 with headlight washer system (SRA) only

Labor Operation:	00 53 029	E53 (w/SRA only)
Labor Allowance:	25 FRU	
Parts Allowance	64 54 6 919 051 – Pusher fan; Qty.= 1	

July 2001

Recall Campaign No. 01V-206, ENGINE AUXILIARY/COOLING FAN

Dear BMW Owner:

This notice is sent to you in accordance with the requirements of the National Traffic and Motor Vehicle Safety Act.

BMW AG has decided that a defect which relates to motor vehicle safety exists in certain 2001 Model Year vehicles. Our records indicate that you are the owner of a potentially affected vehicle.

DESCRIPTION OF DEFECT

The potential defect involves the engine auxiliary/cooling fan of your vehicle.

Fan operation, including variable speed, is electronically controlled. It is possible for the electrical circuitry in the fan control unit to overheat and fail, causing the fan to stop operating. If this were to occur, **engine overheating and subsequent engine damage could result if you continued to drive and the warning provided by the coolant temperature gauge were ignored.**

In addition, it is possible in some cases for the failure of the electrical circuitry to cause **smoldering. In the extreme case, a fire in the fan control unit, which is mounted on the fan and located in the front of the engine compartment, could occur. This could happen either while the engine is running, or after the ignition has been switched off, since the fan may run for up to 11 minutes after engine shutdown.**

PRECAUTIONS

1. **CONTACT YOUR AUTHORIZED BMW CENTER IMMEDIATELY TO ARRANGE TO HAVE THE NECESSARY REPAIR PERFORMED AS SOON AS POSSIBLE.**
2. **Potential engine overheating will be indicated by the needle in the coolant temperature gauge moving from the approximate middle position to the red zone, and on some models by display of the message "COOLANT TEMPERATURE" in the instrument cluster.**

   In some cases, an electrical smell, or burning and/or smoke from the front of the vehicle may be noticed.

   Should any of these warnings occur, pull off the road to a safe location and switch off the engine. If you notice an electrical smell, or burning and/or smoke from the front of the vehicle, do not open the hood. All occupants should carefully exit the vehicle and move to a location away from traffic. Contact BMW Roadside Assistance at 1-800-332-4269 immediately to have your vehicle brought to the nearest BMW center.
3. **If you are not the only driver of this vehicle, please advise all other drivers of this important information.**

DESCRIPTION OF REPAIR

The fan will be replaced with an improved version.

Replacement of the fan will take approximately one hour and will be performed ***free of charge*** by your Authorized BMW center. Additional time may be required depending on the center's scheduling and processing. Call your Authorized BMW center for an appointment.

OTHER INFORMATION

If you are no longer the owner of this vehicle, we would appreciate your furnishing us with the name and address of the new owner, using the enclosed postage-paid card.

Should you have any questions about this campaign, please contact your Authorized BMW center.

We appreciate your confidence in our product, and we wish to do everything we can to retain your confidence. Should you need additional assistance, you may contact BMW Customer Relations at 1-800-831-1117.

If the BMW center is unable to remedy the defect without charge or within a reasonable period of time, you may notify the Administrator of the National Highway Traffic Safety Administration, Washington, DC 20590, or call the toll-free Auto Safety Hotline at 1-888-327-4236.

BMW OF NORTH AMERICA, LLC

01V-206

Service Information

August 2001

Heating and Air Conditioning 64 05 01 Service Engineering

This Service Information bulletin supersedes S.I. 64 05 01 dated June 2001.

Changes to this revision are identified by a black bar.

PERFORM THE PROCEDURE OUTLINED IN THIS SERVICE INFORMATION ON ALL AFFECTED VEHICLES THE NEXT TIME THEY ARE IN THE SHOP FOR MAINTENANCE OR REPAIRS.

Under the National Traffic and Motor Vehicle Safety Act of 1966, as amended, if there has been a recall campaign, dealers must assure that all new vehicles and new items of replacement equipment are free of safety defects and comply with all applicable Federal Motor Vehicle Safety Standards at the time of delivery to the consumer. This means that dealers may not deliver new motor vehicles or new items of replacement equipment to consumers unless the safety defect or noncompliance has been remedied before delivery.

SUBJECT

Recall Campaign 01V-206: Engine Auxiliary/Cooling Fan-E46, E38, E53, E52

MODEL

E46, 3 Series with manual transmission, produced 02/01/2001 up to 06/01/2001
E38, 7 Series from 11/01/2000 up to 01/08/2001 production
E53, X5 from 12/18/2000 up to 04/30/2001 production*
E52, Z8 from 01/01/2001 up to 06/01/2001 production

*** Note: 5 Series (E39) and additional X5 (E53) vehicles are affected by this recall campaign; however, the repair procedure for them is different from what is provided in this bulletin. SIB 64 06 01 covers the repair procedure on those vehicles.**

SITUATION

The potential defect involves the engine auxiliary/cooling fan in certain MY 2001 BMW vehicles. Fan operation, including variable speed, is electronically controlled. It is possible for the electrical circuitry in the fan control unit to overheat and fail, causing the fan to stop operating. If this were to occur, engine overheating and subsequent engine damage could result if vehicle continues to be operated, despite the warning provided by the coolant temperature gauge.

Please initial and route to the following for information before filing											
X	Service Manager		X	Warranty		X	Service Technicians - Initial Below				
X	Service Advisor			Parts Mgr.							
X	Service Advisor			Body Shop							
X	Shop Foreman			PDI Dept.							

★ ★ FIX IT RIGHT THE FIRST TIME, ON TIME, EVERY TIME ★ ★

For administrative convenience and to reduce costs, this bulletin may contain repair procedures for authorized BMW car centers and/or authorized BMW SAV centers. All references to SAVs and/or the X5 are ONLY intended for authorized BMW SAV centers. Furthermore, ONLY BMW SAV centers are authorized to perform repair and service work on SAVs.

© 2001 BMW of North America, LLC

by: VO

Recall

In addition, it is possible in some cases for the failure of the electrical circuitry to cause smoldering. In the extreme case, a fire in the fan control unit, which is mounted in the fan and located in the front of the engine compartment, could occur. This could happen either while the engine is running, or after the ignition has been switched off, since fan may run for up to 11 minutes after engine shutdown.

AFFECTED VEHICLES

This Recall Campaign involves certain Model Year 2001 E46 with manual transmission, and certain E38, E53, E52 and E39 vehicles.

In order to determine if a specific vehicle is affected by this Recall Campaign, it will be necessary to utilize the "Service Menu" of the DCS (Dealer Communication System). Based on the response of the system, either proceed with the corrective action or take no further action.

Corrective actions listed in this bulletin are only to be carried out on vehicles identified in DCS as having the following Open Campaign: 0064320100 SI 64 05 01 ...

The Chassis Number Ranges listed below are only for informational purposes and are not to be considered as the only deciding factor. These chassis numbers only pertain to the vehicles which require the repairs provided in this bulletin.

Model	Chassis Number Range
740i	DN85210 – DN85835
740iLA	DP25926
	DP25931
	DP25952
	DP25960
	DP25971 – DP27906
750iL	DD74561
	DD74573 – DD74848
750iLP	DE35040
	DE35041
Z8	AH60509 – AH60999
325i	EE25793
	EE25839 – EE25842
	EE25935 – EE25962
	EE26118
	EE26146
	EE26157 – EE26161
	EE26171 – EE26197
	EE26247
	EE26254
	EE26362
	EE26368
	EE26379
	FV02938 – FV02941
	FV03009 – FV04399
	NE55308
	NE55319

	NE55323 – NE55329 NE55343 – NE55351 NE55360 – NE56176
325iT	EN80415 – EN80636
325Ci	JW48557 JW48903 – JW49969
325Ci convertible	JY40799 JY40945 – JY41611
330i	FT01376 – FT01379 FT01429 – FT02372
330xi	JR79731 JR79736 – JR80234
330Ci	JU23264 – JU24439
330Ci convertible	EV86726 – EV86727 EV86827 – EV87571
X5 4.4i	LH14482 LH14699 LH14746 LH14760 LH14778 LH14853 LH14886 LH14899 LH14956 LH14985 – LH22080
X5 3.0i	LH78923 – LH79274
X5 3.0iA	LM76123 LM77243 LM77601 LM77632 LM77649 LM77732 LM77754 LM77788 LM77796 LM77842 – LM77844 LM77921 LM77935 LM77956 LM78020 LM78041 – LM85821

CORRECTION

Due to the limited availability of parts, customer notification mailings will be sent out in stages to ensure adequate parts supply for customers receiving notification letters.
On the affected vehicles check the part number on the electric fan shroud, and replace the fan/shroud assembly if necessary.

The Customer Notification Letter is attached.

PROCEDURE

E38, 7 Series vehicles:

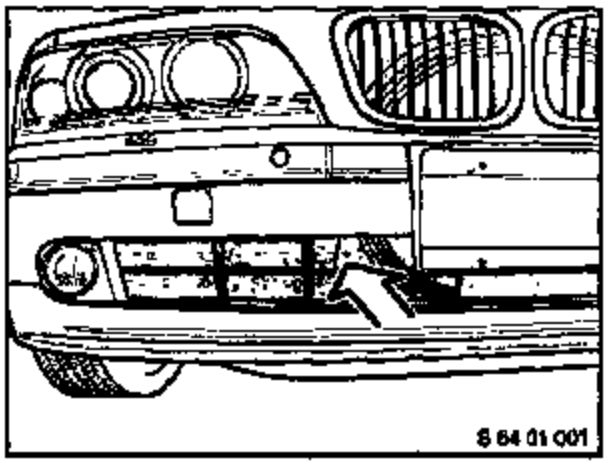

1. Check the BMW part number on the fan/shroud assembly. The part number is located on the lower right side of the shroud (molded next to the BMW logo, or on the label printed next to the logo). The number can be read from the outside, through the lower radiator grille (location indicated on the illustration).

   If the part number is: 64 54 6 919 053, then NO further action is required.

   If the part number differs from that listed, then continue with step 2.

2. Remove front bumper. For removal/installation instructions refer to RA 51 11 000 (which can be found in the BMW Technical Information System – TIS).
3. Remove air-guiding ducts in front of radiator.
4. Replace electric auxiliary fan/shroud assembly.
5. Reinstall all removed components.

E46, 3 Series (with manual transmission) vehicles:

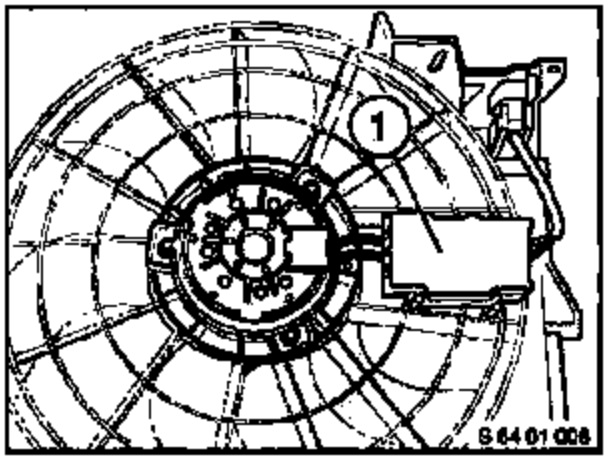

1. Check whether a fan with an external electronics box has been installed in the vehicle. The housing for the external electronics is installed on the fan shroud, between the fan and the engine block (1).

   If the electric fan with external electronics has been installed, then NO further action is required.

   If the electric fan with internal electronics has been installed, then continue with step 2.

2. Remove electric fan/shroud assembly. For removal/installation instructions refer to RA 17 11 031 (which can be found in the BMW Technical Information System – TIS).

3. Check the BMW part number on the fan/shroud assembly. The fan's part number can be found in the lower left corner of the shroud (molded next to the BMW logo, or on the label printed next to the logo).
   If the part number is 17 11 7 516 813, then NO further action is required. Reinstall all previously removed components.

   If the part number differs from that listed, then the electric fan has to be replaced with the improved unit.

E52, Z8 vehicles:

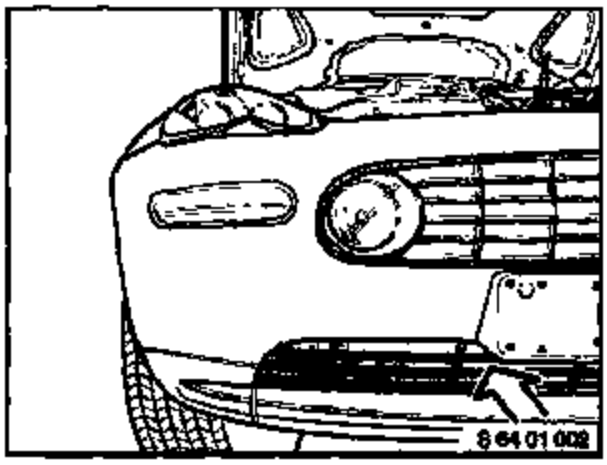

1. Check the BMW part number on the fan/shroud assembly. The part number is located on the lower right side of the shroud (molded next to the BMW logo, or on the label printed next to the logo). The number can be read from the outside, through the lower radiator grille (location indicated on the illustration).

   If the part number is: 64 54 6 919 053, then NO further action is required.

   If the part number differs from that listed, then continue with step 2.

2. Remove top radiator cover and center air-guiding ducts
3. Disconnect electrical connector to the auxiliary fan.
4. Replace electric auxiliary fan/shroud assembly.
5. Reinstall all removed components.

E53, X5 vehicles:

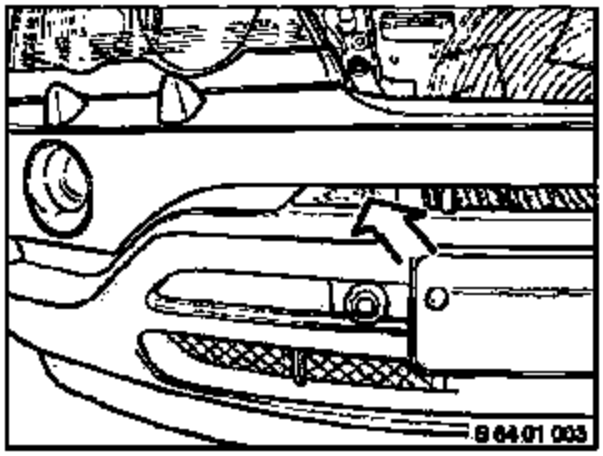

1. Check the BMW part number on the fan/shroud assembly. The part number is located on the lower right side of the shroud (molded next to the BMW logo, or on the label printed next to the logo). The number can be read from the outside, through the gap between bumper trim and the cover (location indicated on the illustration).

   If the part number is: 64 54 6 919 051, then NO further action is required.

   If the part number differs from that listed, then continue with step 2.

2. Replace the auxiliary fan. For removal/installation instructions refer to RA 17 40 000 ("Removing and refitting/replacing complete auxiliary fan M62, M54"), which can be found in the BMW Technical Information System – TIS.

PARTS INFORMATION

Part Number	Description	Quantity
64 54 6 919 053	Pusher fan E38/E52 vehicles	1
17 11 7 516 813	Cooling fan E46 w. manual trans.	1
64 54 6 919 051	Pusher fan E53 vehicles	1

Every BMW center will receive an initial allocation of the improved parts.

Ordering Information:
As soon as the automatic parts shipment takes place, all existing back orders will be cancelled. After the automatic parts shipment, the only orders that will be accepted are VIN specific, single line VOR orders.

The parts allocation will be coordinated with the customer notification process.

LABEL INSTRUCTIONS

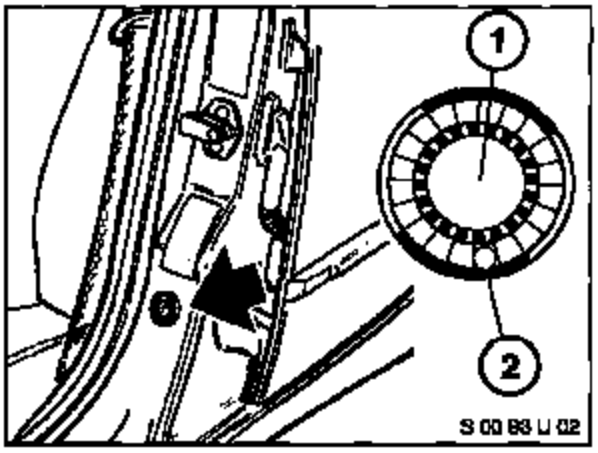

This Recall Campaign has been assigned code number **312**. After the vehicle has been checked, and corrected if necessary, obtain a label (SD 92-170) and:

a. emboss your BMW dealer warranty number in the middle of the label (1);

b. punch out code number **312** printed on the label and,

c. affix the label to the B pillar as shown.

If the vehicle already has a label from a previous Service Action/Recall Campaign, affix the new label next to the old one. Do not affix one label on top of another one because a number from an underlying label could appear in the punched-out hole of the new label.

WARRANTY INFORMATION

Reimbursement for this Recall Campaign will be provided through Campaign Entry.

Defect Code **00 64 32 01 00**

Work Package #1: Check electric fan part number only (all models)

Labor Operation: 00 53 026
Labor Allowance: 5 FRU

Work Package #2: Check and replace auxiliary/cooling fan on E38 (740i/iL with headlight washing - SRA only), E46, E52, & E53 vehicles

Labor Operation:	00 53 028	E38 (740i/iL with SRA only)
Labor Allowance:	11 FRU	
Parts Allowance:	64 54 6 919 053 – Pusher fan; Qty.= 1	
Labor Operation:	00 53 027	E46
Labor Allowance:	5 FRU	
Parts Allowance	17 11 7 516 813 – Cooling fan; Qty.= 1	
Labor Operation:	00 53 027	E52 (Z8)
Labor Allowance:	10 FRU	
Parts Allowance:	64 54 6 919 053 – Pusher fan; Qty.= 1	
Labor Operation:	00 53 027	E53
Labor Allowance:	24 FRU	
Parts Allowance	64 54 6 919 051 – Pusher fan; Qty.= 1	

Work Package #3: Check and replace auxiliary/cooling fan on E38, E53 vehicles with PDC <u>and</u> headlight washing system (SRA)

Labor Operation:	00 53 030	E38 (all 750iL & 740i/iL w/PDC & SRA)
Labor Allowance:	12 FRU	
Parts Allowance:	64 54 6 919 053 – Pusher fan; Qty.= 1	
Labor Operation:	00 53 030	E53 (w/PDC & SRA)
Labor Allowance:	26 FRU	
Parts Allowance	64 54 6 919 051 – Pusher fan; Qty.= 1	

Work Package #4: Check and replace auxiliary/cooling fan on E53 with PDC only

Labor Operation:	00 53 029	E53 (w/PDC only)
Labor Allowance:	25 FRU	
Parts Allowance	64 54 6 919 051 – Pusher fan; Qty.= 1	

Work Package #5: Check and replace auxiliary/cooling fan on E53 with headlight washer system (SRA) only

Labor Operation:	00 53 028	E53 (w/SRA only)
Labor Allowance:	25 FRU	
Parts Allowance	64 54 6 919 051 – Pusher fan; Qty.= 1	

July 2001

Recall Campaign No. 01V-206, ENGINE AUXILIARY/COOLING FAN

Dear BMW Owner:

This notice is sent to you in accordance with the requirements of the National Traffic and Motor Vehicle Safety Act.

BMW AG has decided that a defect which relates to motor vehicle safety exists in certain 2001 Model Year vehicles. Our records indicate that you are the owner of a potentially affected vehicle.

DESCRIPTION OF DEFECT

The potential defect involves the engine auxiliary/cooling fan of your vehicle.

Fan operation, including variable speed, is electronically controlled. It is possible for the electrical circuitry in the fan control unit to overheat and fail, causing the fan to stop operating. If this were to occur, **engine overheating and subsequent engine damage could result if you continued to drive and the warning provided by the coolant temperature gauge were ignored.**

In addition, it is possible in some cases for the failure of the electrical circuitry to cause **smoldering. In the extreme case, a fire in the fan control unit, which is mounted on the fan and located in the front of the engine compartment, could occur. This could happen either while the engine is running, or after the ignition has been switched off, since the fan may run for up to 11 minutes after engine shutdown.**

PRECAUTIONS

1. **CONTACT YOUR AUTHORIZED BMW CENTER IMMEDIATELY TO ARRANGE TO HAVE THE NECESSARY REPAIR PERFORMED AS SOON AS POSSIBLE.**
2. **Potential engine overheating will be indicated by the needle in the coolant temperature gauge moving from the approximate middle position to the red zone, and on some models by display of the message "COOLANT TEMPERATURE" in the instrument cluster.**

   In some cases, an electrical smell, or burning and/or smoke from the front of the vehicle may be noticed.

   Should any of these warnings occur, pull off the road to a safe location and switch off the engine. If you notice an electrical smell, or burning and/or smoke from the front of the vehicle, do not open the hood. All occupants should carefully exit the vehicle and move to a location away from traffic. Contact BMW Roadside Assistance at 1-800-332-4289 immediately to have your vehicle brought to the nearest BMW center.
3. **If you are not the only driver of this vehicle, please advise all other drivers of this important information.**

DESCRIPTION OF REPAIR

The fan will be replaced with an improved version.

Replacement of the fan will take approximately one hour and will be performed ***free of charge*** by your Authorized BMW center. Additional time may be required depending on the center's scheduling and processing. Call your Authorized BMW center for an appointment.

OTHER INFORMATION

If you are no longer the owner of this vehicle, we would appreciate your furnishing us with the name and address of the new owner, using the enclosed postage-paid card.

Should you have any questions about this campaign, please contact your Authorized BMW center.

We appreciate your confidence in our product, and we wish to do everything we can to retain your confidence. Should you need additional assistance, you may contact BMW Customer Relations at 1-800-831-1117.

If the BMW center is unable to remedy the defect without charge or within a reasonable period of time, you may notify the Administrator of the National Highway Traffic Safety Administration, Washington, DC 20590, or call the toll-free Auto Safety Hotline at 1-888-327-4236.

BMW OF NORTH AMERICA, LLC

Service Information

September 2001

Heating and Air Conditioning 64 07 01 Service Engineering

This Service Information bulletin supersedes SI 64 07 01 **dated September 2001**, and replaces S.I. 64 05 01 and S.I. 64 06 01 **dated August 2001** which should be removed from your SI binder.

Changes to this revision are identified by a black bar.

PERFORM THE PROCEDURE OUTLINED IN THIS SERVICE INFORMATION ON ALL AFFECTED VEHICLES IN STOCK PRIOR TO CUSTOMER DELIVERY, OR THE NEXT TIME THEY ARE IN THE SHOP FOR MAINTENANCE OR REPAIRS.

Under the National Traffic and Motor Vehicle Safety Act of 1966, as amended, if there has been a recall campaign, dealers must assure that all new vehicles and new items of replacement equipment are free of safety defects and comply with all applicable Federal Motor Vehicle Safety Standards at the time of delivery to the consumer. This means that dealers may not deliver new motor vehicles or new items of replacement equipment to consumers unless the safety defect or noncompliance has been remedied before delivery.

SUBJECT

Recall Campaign 01V-206: Engine Auxiliary/Cooling Fan - E46, E38, E39, E52, E53

MODEL

E46, 3 Series with manual transmission, produced 02/01/2001 up to 06/01/2001
E38, 7 Series from 11/01/2000 up to 07/27/2001
E39, 5 Series from 01/16/2001 up to 08/31/2001
E52, Z8 from 01/01/2001 up to 08/31/2001
E53, X5 from 12/18/2000 up to 09/05/2001

NOTE:
This notification contains important changes to the current Recall Campaign 01V-206, Engine Auxiliary /Cooling Fan.

Please initial and route to the following for information before filing												
X	Service Manager		X	Warranty		X	Service Technicians - Initial Below					
X	Service Advisor			Parts Mgr.								
X	Service Advisor			Body Shop								
X	Shop Foreman			PDI Dept.								

★ ★ FIX IT RIGHT THE FIRST TIME, ON TIME, EVERY TIME ★ ★

For administrative convenience and to reduce costs, this bulletin may contain repair procedures for authorized BMW car owners and/or authorized BMW SAV centers. All references to SAVs and/or the X5 are ONLY intended for authorized BMW SAV centers. Furthermore, ONLY BMW SAV centers are authorized to perform repair and service work on SAVs.

© 2001 BMW of North America, LLC

by: VO

ALL VEHICLES CAMPAIGNED UNDER THE CURRENT RECALL 01V-206 WILL BE RECALLED AGAIN USING THE FOLLOWING, NEW PART NUMBERS:

- **E46 – PN 17 11 7 510 617**
- **E39 – PN 64 54 6 921 395**
- **E38/E52 – PN 64 54 6 921 383**
- **E53 – PN 64 54 6 921 381**

IN ADDITION, THE AFFECTED VEHICLES CHASSIS NUMBER RANGES HAVE BEEN EXPANDED.

Should a customer who has received a Notification Letter for Recall 01V-206 request that Recall 01V-206 be performed, proceed with the repairs described in this Service Bulletin.

SITUATION

The potential defect involves the engine auxiliary/cooling fan in certain MY 2001 BMW vehicles. Fan operation, including variable speed, is electronically controlled. It is possible for the electrical circuitry in the fan control unit to overheat and fail, causing the fan to stop operating. If this were to occur, engine overheating and subsequent engine damage could result if vehicle continues to be operated, despite the warning provided by the coolant temperature gauge.

In addition, it is possible in some cases for the failure of the electrical circuitry to cause smoldering. In the extreme case, a fire in the fan control unit, which is mounted in the fan and located in the front of the engine compartment, could occur. This could happen either while the engine is running or after the ignition has been switched off since fan may run for up to 11 minutes after engine shutdown.

AFFECTED VEHICLES

This Recall Campaign involves certain Model Year 2001 E46 with manual transmission, and certain E38, E53, E52 and E39 vehicles.

In order to determine if a specific vehicle is affected by this Recall Campaign, it will be necessary to utilize the "Service Menu" of the DCS (Dealer Communication System). Based on the response of the system, either proceed with the corrective action or take no further action.

Corrective actions listed in this bulletin are only to be carried out on vehicles identified in DCS as having the following Open Campaign: 0064360100 SI 64 07 01.

The Chassis Number Ranges listed below are **only** for informational purposes and are not to be considered as the only deciding factor. These chassis numbers only pertain to the vehicles which require the repairs provided in this bulletin.

Model	**Chassis Number Range**
740i	DN85210 – DN89753
740iLA	DP25926 DP25931 DP25952 DP25960 DP25971 – DP34408
740iLP	DE05040 – DE05041
750IL	DD74561 DD74573 – DD74804
750iLP	DE35040 DE35041
Z8	AH60509 – AH61229
325i	EE25793 EE25839 – EE25842 EE25935 – EE25962 EE26116 EE26148 EE26157 – EE26161 EE26171 – EE26197 EE26247 EE26254 EE26362 EE26368 EE26379 FV02938 – FV02941 FV03009 – FV04399 NE55308 NE55319 NE55323 – NE55329 NE55343 – NE55351 NE55360 – NE56176
325xiT	EN80415 – EN80636
325Ci	JW48557 JW48903 – JW49969
325CI convertible	JY40799 JY40945 – JY41611
330i	FT01376 – FT01379 FT01429 – FT02372

330xi	JR79731 JR79736 – JR80234
330Ci	JU23264 – JU24439
330Ci convertible	EV86726 – EV86727 EV86827 – EV87571
M5	BZ98393 – BZ99697
530I	CE90571 – CE91973
530iA	CF04877 CF04889 CF04899 CF04906 CF04928 – CF14933
540i	GC96871 – GC98571
525iT	GD50120 – GD50260
525iTA	GD85103 – GD86220
525i	GF40563 – GF59999
540IA	GM71202 GM71213 – GM74059
540ITA	GN91705 – GN91975
525IA	GX20000 GX20193 – GX27907
X5 4.4I	LH14482 LH14699 LH14746 LH14760 LH14778 LH14853 LH14886 LH14899 LH14958 LH14985 – LH27182
X5 3.0i	LH78923 – LH79589
X5 3.0iA	LM76123 LM77243 LM77601 LM77632 LM77649 LM77732 LM77754

LM77788
LM77796
LM77842
LM77844
LM77921
LM77935
LM77956
LM78020
LM78041 – LM90999
LP20000
LP20021 – LP24703
LP24724
LP24730
LP24741 – LP24764

CORRECTION

Customer notification mailings will be sent out in stages to ensure adequate parts supply for customers receiving notification letters.

On the affected vehicles check the part number on the electric fan shroud, and replace the fan/shroud assembly if necessary.

The Customer Notification Letter is attached.

PROCEDURE

E38, 7 Series vehicles:

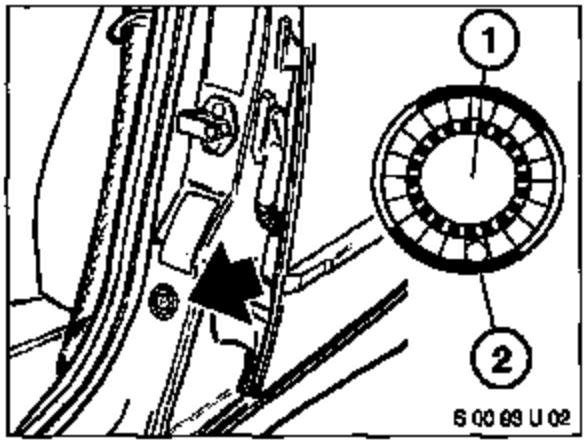

1. Check the Recall Campaign label affixed to the B-pillar:

   If the recall code number 316 is punched-out on the on the label (2), then NO further action is required.

   If the number differs from 316, or recall label is not found, then continue with step 2.

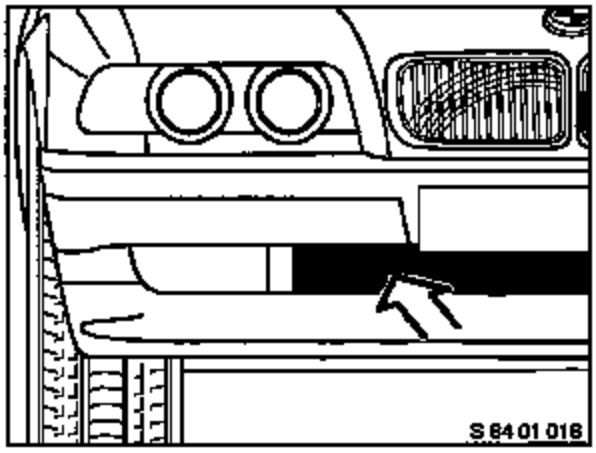

2. Check the BMW part number on the fan/shroud assembly. The part number is located on the lower right side of the shroud (molded next to the BMW logo, or on the label printed next to the logo). The number can be read from the outside, through the lower radiator grille (location indicated on the illustration).

   If the part number is: 84 54 6 921 383, then NO further action is required.

   If the part number differs from that listed, then continue with step 3.

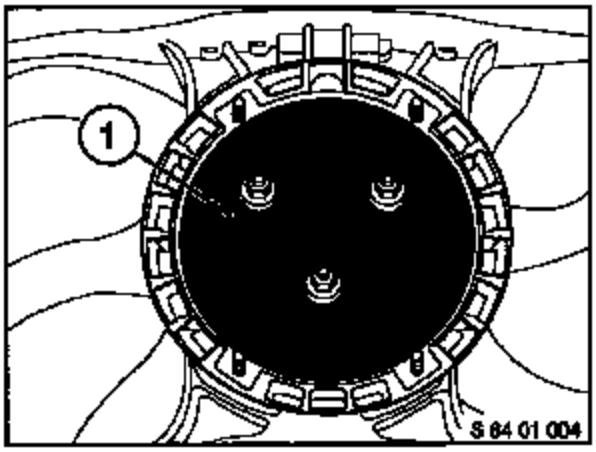

3. Remove front bumper. For removal/installation instructions refer to RA 51 11 000 (which can be found in the BMW Technical Information System – TIS).
4. Remove air-guiding ducts in front of radiator.
5. Remove electric auxiliary fan/shroud assembly, and inspect the back of the fan housing.

   If the motor housing (1) is solid black, without cutouts (as shown on the illustration), then NO further action is required. Reinstall all previously removed components.

   If the motor housing has cutouts and the aluminum body of the fan module can be seen, then replace electric auxiliary fan/shroud assembly with the new part - PN 84 54 6 921 383.

E39, 5 Series vehicles:

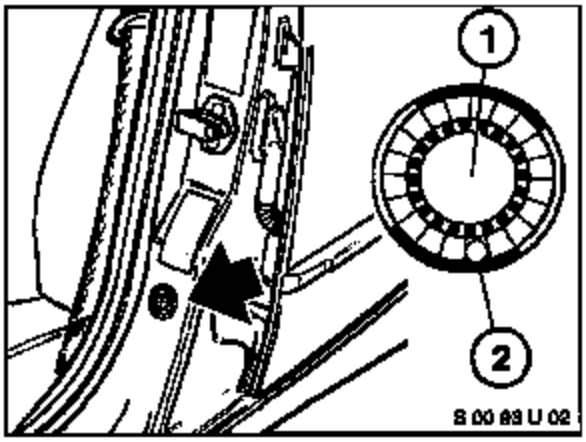

1. Check the Recall Campaign label affixed to the B-pillar:

   If the recall code number 316 is punched-out on the on the label (2), then NO further action is required.

   If the number differs from 316, or recall label is not found, then continue with step 2.

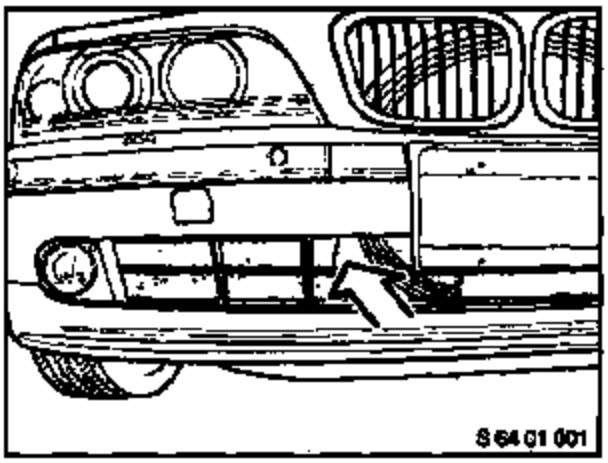

2. Check the BMW part number on the fan/shroud assembly. The part number is located on the lower right side of the shroud (molded next to the BMW logo, or on the label printed next to the logo). The number can be read from the outside, through the lower radiator grille (location indicated on the illustration).

   If the part number is: 64 54 6 921 395, then NO further action is required.

   If the part number differs from that listed, then continue with step 3.

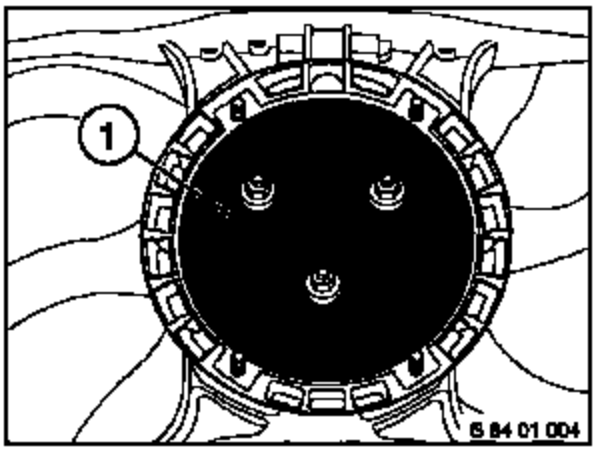

3. Remove front bumper. For removal/installation instructions refer to RA 51 11 000 (which can be found in the BMW Technical Information System – TIS).
4. Remove air-guiding ducts in front of radiator.
5. Remove electric auxiliary fan/shroud assembly, and inspect the back of the fan housing.

   If the motor housing (1) is solid black, without cutouts (as shown on the illustration), then NO further action is required. Reinstall all previously removed components.

   If the motor housing has cutouts and the aluminum body of the fan module can be seen, then replace electric auxiliary fan/shroud assembly with the new part - PN 64 54 6 921 395.

E46, 3 Series (with manual transmission) vehicles:

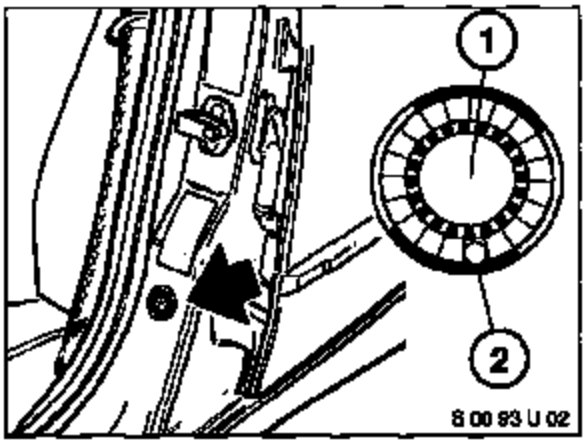

1. Check the Recall Campaign label affixed to the B-pillar:

   If the recall code number 316 is punched-out on the on the label (2), then NO further action is required.

   If the number differs from 316, or recall label is not found, then continue with step 2.

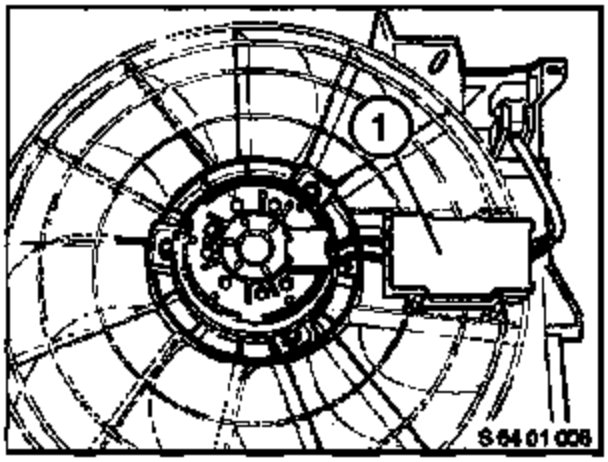

2. Check whether a fan with an external electronics box has been installed in the vehicle. The housing for the external electronics is installed on the fan shroud, between the fan and the engine block (1).

   If the electric fan with external electronics has been installed, then NO further action is required.

   If the electric fan with internal electronics has been installed, then continue with step 3.

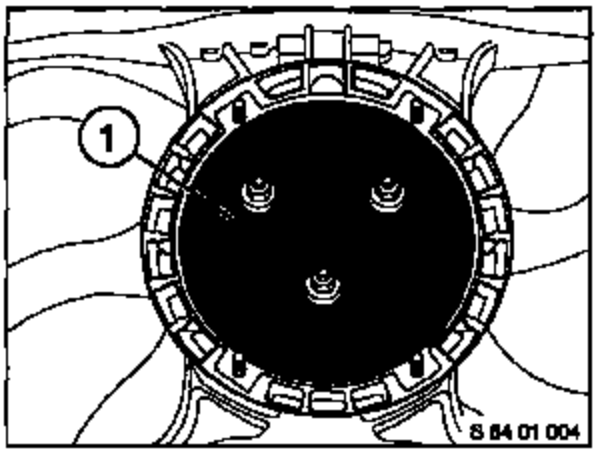

3. Remove electric fan/shroud assembly. For removal/installation instructions refer to TIS RA 17 11 031. Inspect the back of the fan housing:

   If the motor housing (1) is solid black, without cutouts (as shown on the illustration), then NO further action is required. Reinstall all previously removed components.

   If the motor housing has cutouts and the aluminum body of the fan module can be seen, then replace electric auxiliary fan/shroud assembly with the new part - PN 17 11 7 510 817.

E52, Z8 vehicles:

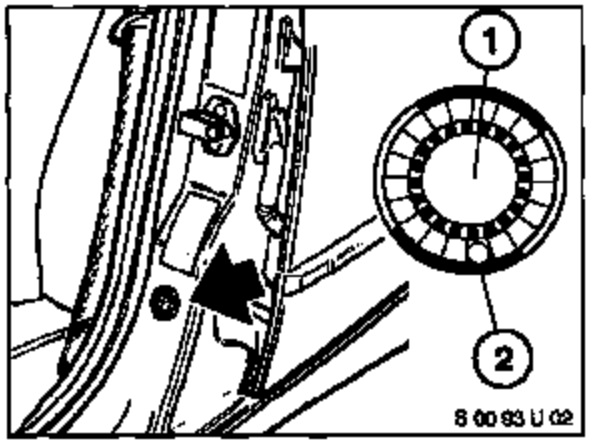

1. Check the Recall Campaign label affixed to the B-pillar:

   If the recall code number 316 is punched-out on the on the label (2), then NO further action is required.

   If the number differs from 316, or recall label is not found, then continue with step 2.

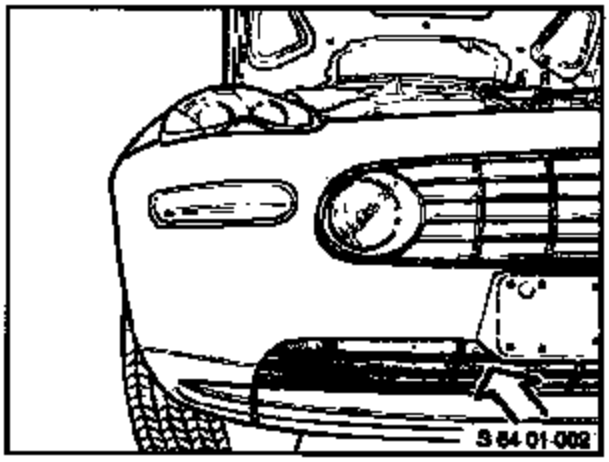

2. Check the BMW part number on the fan/shroud assembly. The part number is located on the lower right side of the shroud (molded next to the BMW logo, or on the label printed next to the logo). The number can be read from the outside, through the lower radiator grille (location indicated on the illustration).

   If the part number is: 64 54 6 921 383, then NO further action is required.

   If the part number differs from that listed, then continue with step 3.

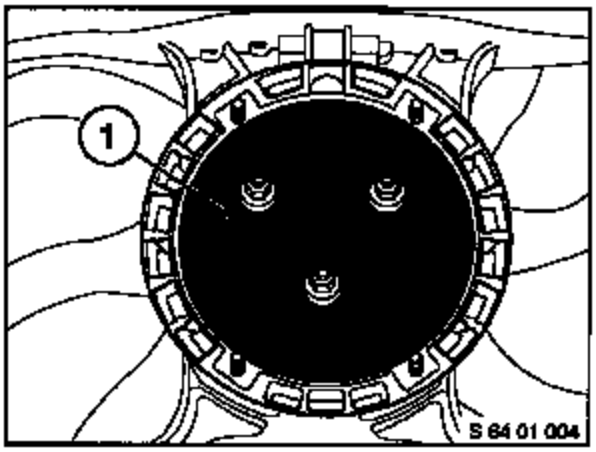

3. Remove top radiator cover and center air-guiding ducts.
4. Disconnect electrical connector to the auxiliary fan.
5. Remove electric auxiliary fan/shroud assembly, and inspect the back of the fan housing.

   If the motor housing (1) is solid black, without cutouts (as shown on the illustration), then NO further action is required. Reinstall all previously removed components.

   If the motor housing has cutouts and the aluminum body of the fan module can be seen, then replace electric auxiliary fan/shroud assembly with the new part - PN 64 54 6 921 383.

E53, X5 vehicles:

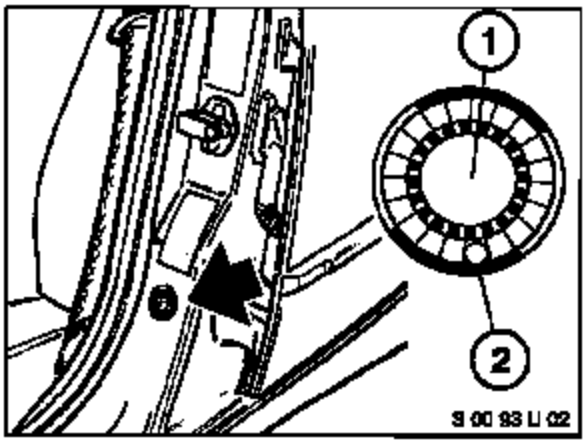

1. Check the Recall Campaign label affixed to the B-pillar:

   If the recall code number 316 is punched-out on the on the label (2), then NO further action is required.

   If the number differs from 316, or recall label is not found, then continue with step 2.

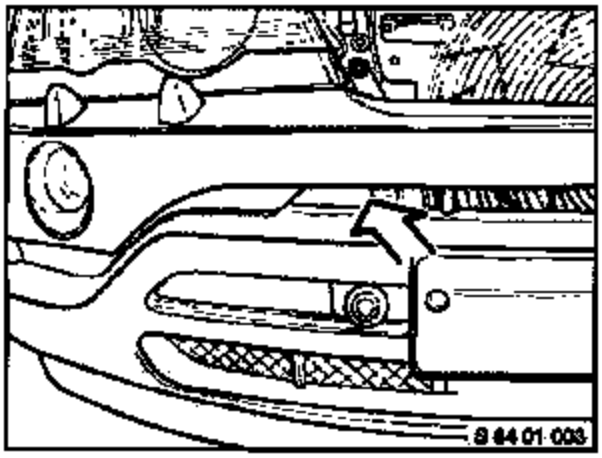

2. Check the BMW part number on the fan/shroud assembly. The part number is located on the lower right side of the shroud (molded next to the BMW logo, or on the label printed next to the logo). The number can be read from the outside, through the gap between bumper trim and the cover (location indicated on the illustration).

   If the part number is: 64 54 6 921 381, then NO further action is required.

   If the part number differs from that listed, then continue with step 3.

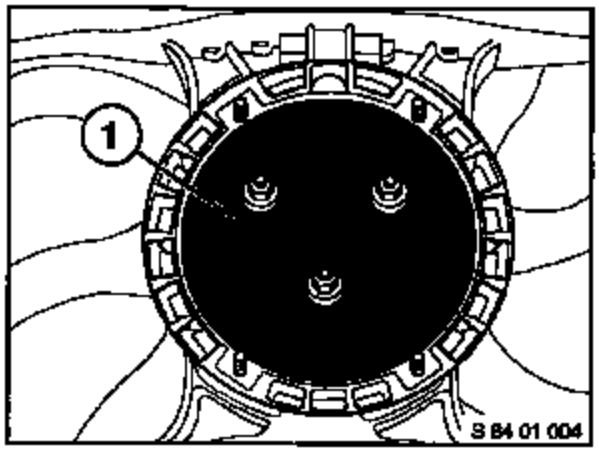

3. Remove electric fan/shroud assembly. For removal/installation instructions refer to TIS RA 17 40 000. Inspect the back of the fan housing:

   If the motor housing (1) is solid black, without cutouts (as shown on the illustration), then NO further action is required. Reinstall all previously removed components.

   If the motor housing has cutouts and the aluminum body of the fan module can be seen, then replace electric auxiliary fan/shroud assembly with the new part - PN 64 54 6 921 381.

PARTS INFORMATION

Part Number	Description	Quantity
17 11 7 510 617	Cooling fan E46 w. manual trans.	1
64 54 6 921 383	Pusher fan E38/E52 vehicles	1
64 54 6 921 395	Pusher fan E39 vehicles	1
64 54 6 921 381	Pusher fan E53 vehicles	1

An initial shipment of the new part numbers will be sent to each center, with the exception of the E46, for which you have already been ordering the new part number. We will stagger shipments of the new numbers for the E38/E52, E39, and E53, due to the initial limited parts supply. Please only use these new fans to repair: In stock vehicles before they are retailed, vehicle for which customers present recall notification letters, and vehicles with fan failures.

After the initial inventory of the new fans is depleted, centers should only place orders using the new part numbers, for vehicles that are off the road due to a fan failure, or if a customer presents a recall notification letter. All orders must be placed as VIN specific single-line orders. These orders must coincide with the mailed VIN ranges that have been previously issued. Centers will be notified once the new mailed VIN ranges are issued. Fax orders, non-VIN specific orders, and multiple quantity orders will not be accepted. Anything other than VIN specific orders will be cancelled.

DO NOT ORDER THE PARTS FOR STOCKING PURPOSES. These parts will not be accepted for return via AFA, 90-day return, or obsolescence.

PLEASE PLACE ORDERS FOR VEHICLES OUTSIDE THE SPECIFIC MAILED VIN RANGES AND THEN CONTACT THE PARTS CONSULTANT GROUP AT 1-800-272-0202, TO GET THE PARTS RELEASED.

Effective immediately do not use any of the old part numbers in any vehicles. These parts may be returned to your facing PDC using the standard return section of the dealer return system, using the return reason code Tech6 (only valid through October 5th, 2001).

LABEL INSTRUCTIONS

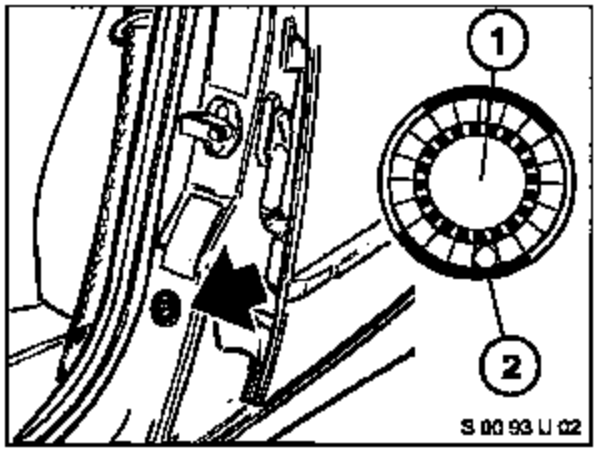

This Recall Campaign has been assigned code number **316**. After the vehicle has been checked, and corrected if necessary, obtain a label (SD 92-170) and:

a. emboss your BMW dealer warranty number in the middle of the label (1);

b. punch out code number **316** printed on the label and,

c. affix the label to the **B** pillar as shown.

If the vehicle already has a label from a previous Service Action/Recall Campaign, affix the new label next to the old one. Do not affix one label on top of another one because a number from an underlying label could appear in the punched-out hole of the new label.

WARRANTY INFORMATION

- Reimbursement for this Recall Campaign will be provided through Campaign Entry.
- If fan replacement is necessary, and the required improved part is not on hand, the customer should be provided with a **service loaner**. If all loaners are in use, BMW NA will reimburse for actual invoiced rental in sublet under the following defect code, up to a maximum of $49.00 per day (plus tax) for a maximum of five days under the terms of the "Self-Authorization Program". The BMW agreement with Enterprise Rent-A-Car should be utilized whenever possible to provide the best service to the customer.
- BMW NA needs to track the use of rentals required in conjunction with failures of the auxiliary fan motor. For this reason, a unique rental defect code: **11 00 99 99 ZZ** is being assigned. All rentals in conjunction with this repair, whether self-authorized or Market Team authorized, must use this defect code.
- Please do not use rental vendor codes PB, SA, ER, SR, WR or CR if rental is claimed for this repair only.

Defect Code **00 64 36 01 00**

Work Package #1: Check electric fan part number only (all models) without fan removal

Labor Operation: 00 53 092
Labor Allowance: 5 FRU

Work Package #2: Check electric fan part number, remove fan and check housing only on E38 (740i/iL with headlight washing only), E39, E46, E52, & E53 vehicles

Labor Operation:	00 53 108	
Labor Allowance:	5 FRU	E46
Labor Allowance:	10 FRU	E52 (Z8)
Labor Allowance:	16 FRU	E39 (Not applicable for M5)
Labor Allowance:	24 FRU	E53
Labor Operation:	00 53 109	
Labor Allowance:	11 FRU	E38 (740i/iL with headlight washing only)

Work Package #3: Check electric fan part number, remove fan and check housing only on E38 (all 750iL & 740i/iL w/PDC & SRA), and E39, E53 vehicles with SRA only, or SRA and PDC

Labor Operation:	00 53 111	
Labor Allowance:	12 FRU	E38 with PDC and SRA
Labor Operation:	00 53 109	
Labor Allowance:	17 FRU	E39 w/SRA, or w/SRA & PDC (Applicable for M5)
Labor Allowance:	25 FRU	E53 w/SRA, or w/SRA & PDC

Work Package #4: Check and **replace** auxiliary/cooling fan on E38 (740i/iL with headlight washing only), E39, E46, E52, E53 vehicles

Labor Operation:	00 53 094	E38 (740i/iL with SRA only)
Labor Allowance:	11 FRU	
Parts Allowance:	64 54 6 921 383 – Pusher fan; Qty.= 1	
Labor Operation:	00 53 093	E39 (Not applicable for M5)
Labor Allowance:	16 FRU	
Parts Allowance	64 54 6 921 385 – Cooling fan; Qty.= 1	
Labor Operation:	00 53 093	E46
Labor Allowance:	5 FRU	
Parts Allowance	17 11 7 510 617 – Cooling fan; Qty.= 1	
Labor Operation:	00 53 093	E52 (Z8)
Labor Allowance:	10 FRU	
Parts Allowance:	64 54 6 921 383 – Pusher fan; Qty.= 1	
Labor Operation:	00 53 093	E53
Labor Allowance:	24 FRU	
Parts Allowance	64 54 6 921 381 – Pusher fan; Qty.= 1	

Work Package #5: Check and **replace** auxiliary/cooling fan on E38, E39, E53 vehicles with PDC and headlight washing system (SRA)

Labor Operation:	00 53 096	E38 (all 750iL & 740i/iL w/PDC & SRA)
Labor Allowance:	12 FRU	
Parts Allowance:	64 54 6 921 383 – Pusher fan; Qty.= 1	
Labor Operation:	00 53 096	E39 (w/PDC & SRA)
Labor Allowance:	17 FRU	Applicable for M5
Parts Allowance	64 54 6 921 395 – Pusher fan; Qty.= 1	
Labor Operation:	00 53 096	E53 (w/PDC & SRA)
Labor Allowance:	26 FRU	
Parts Allowance	64 54 6 921 381 – Pusher fan; Qty.= 1	

Work Package #6: Check and **replace** auxiliary/cooling fan on E39, E53 with PDC only

Labor Operation:	00 53 095	E39 (w/PDC only)
Labor Allowance:	16 FRU	Not applicable for M5
Parts Allowance	64 54 6 921 395 – Pusher fan; Qty.= 1	
Labor Operation:	00 53 095	E53 (w/PDC only)
Labor Allowance:	25 FRU	
Parts Allowance	64 54 6 921 381 – Pusher fan; Qty.= 1	

Work Package #7: Check and **replace** auxiliary/cooling fan on E39, E53 with headlight washer system (SRA) only

Labor Operation:	00 53 094	E39 (w/SRA only)
Labor Allowance:	17 FRU	Applicable for M5
Parts Allowance	64 54 6 921 395 – Pusher fan; Qty.= 1	
Labor Operation:	00 53 094	E53 (w/SRA only)
Labor Allowance:	25 FRU	
Parts Allowance	64 54 6 921 381 – Pusher fan; Qty.= 1	

September 2001

Recall Campaign No. 01V-206, ENGINE AUXILIARY/COOLING FAN

Dear BMW Owner:

This notice is sent to you in accordance with the requirements of the National Traffic and Motor Vehicle Safety Act.

BMW AG has decided that a defect which relates to motor vehicle safety exists in certain 2001 Model Year vehicles. Our records indicate that you are the owner of a potentially affected vehicle.

You may already have received a recall notice for this campaign and may also have had the repair performed. Please note that this campaign is being reissued on all affected vehicles to incorporate an updated repair part.

THIS MEANS THAT EVEN IF YOUR VEHICLE HAS ALREADY BEEN REPAIRED FOR THIS PROBLEM, IT IS INVOLVED IN THIS REISSUED RECALL. PLEASE CONTACT YOUR BMW CENTER AS SOON AS POSSIBLE TO ARRANGE TO HAVE THE UPDATED REPAIR PART INSTALLED.

DESCRIPTION OF DEFECT

The potential defect involves the engine auxiliary/cooling fan of your vehicle.

Fan operation is electronically controlled. It is possible for the electrical circuitry in the fan control unit to overheat and fail, causing the fan to stop operating. If this were to occur, **engine overheating and subsequent engine damage could result if the warning provided by the coolant temperature gauge were ignored and you continued to drive.**

It is also possible in some cases for the failure of the electrical circuitry to cause **smoldering. In the extreme case, a fire in the fan control unit, which is mounted on the fan and located in the front of the engine compartment, could occur. This could happen either while the engine is running, or after the ignition has been switched off, since the fan may run for up to 11 minutes after engine shutdown.**

PRECAUTIONS

1. **CONTACT YOUR AUTHORIZED BMW CENTER IMMEDIATELY TO ARRANGE TO HAVE THE NECESSARY REPAIR PERFORMED AS SOON AS POSSIBLE.**
2. **Potential engine overheating will be indicated by the needle in the coolant temperature gauge moving from the approximate middle position to the red zone, and on some models by display of the message "COOLANT TEMPERATURE" in the instrument cluster.**

   In some cases, an electrical smell, or burning and/or smoke from the front of the vehicle may be noticed.

   Should any of these warnings occur, pull off the road to a safe location and switch off the engine. If you notice an electrical smell, or burning and/or smoke from the front of the

vehicle, do not open the hood. All occupants should carefully exit the vehicle and move to a location away from traffic. Contact BMW Roadside Assistance at 1-800-332-4269 immediately to have your vehicle brought to the nearest BMW center.

3. **If you are not the only driver of this vehicle, please advise all other drivers of this important information.**

DESCRIPTION OF REPAIR

The fan will be replaced with an improved version.

Replacement of the fan will take approximately one to three hours, depending on the vehicle model, and will be performed ***free of charge*** by your Authorized BMW center. Additional time may be required depending on the center's scheduling and processing. Call your Authorized BMW center for an appointment.

OTHER INFORMATION

If you are no longer the owner of this vehicle, we would appreciate your furnishing us with the name and address of the new owner, using the enclosed postage-paid card.

Should you have any questions about this campaign, please contact your Authorized BMW center.

We appreciate your confidence in our product, and we wish to do everything we can to retain your confidence. Should you need additional assistance, you may contact BMW Customer Relations at 1-800-831-1117.

If the BMW center is unable to remedy the defect without charge or within a reasonable period of time, you may notify the Administrator of the National Highway Traffic Safety Administration, Washington, DC 20590, or call the toll-free Auto Safety Hotline at 1-888-327-4236.

BMW OF NORTH AMERICA, LLC

Service Information

December 2001

Heating and Air Conditioning 64 07 01 Service Engineering

This Service Information bulletin supersedes SI 64 07 01 **dated September 2001,** which should be removed from your SI binder.

Changes to this revision are identified by a black bar.

PERFORM THE PROCEDURE OUTLINED IN THIS SERVICE INFORMATION ON ALL AFFECTED VEHICLES IN STOCK PRIOR TO CUSTOMER DELIVERY, OR THE NEXT TIME THEY ARE IN THE SHOP FOR MAINTENANCE OR REPAIRS.

Under the National Traffic and Motor Vehicle Safety Act of 1966, as amended, if there has been a recall campaign, dealers must assure that all new vehicles and new items of replacement equipment are free of safety defects and comply with all applicable Federal Motor Vehicle Safety Standards at the time of delivery to the consumer. This means that dealers may not deliver new motor vehicles or new items of replacement equipment to consumers unless the safety defect or noncompliance has been remedied before delivery.

SUBJECT

Recall Campaign 01V-206: Engine Auxiliary/Cooling Fan - E46, E38, E39, E52, E53

MODEL

E46, 3 Series with manual transmission, produced 02/01/2001 up to 06/01/2001
E38, 7 Series from 11/01/2000 up to 07/27/2001
E39, 5 Series from 01/16/2001 up to 08/31/2001
E52, Z8 from 01/01/2001 up to 08/31/2001
E53, X5 from 12/18/2000 up to 09/05/2001

SITUATION

The potential defect involves the engine auxiliary/cooling fan in certain MY 2001 BMW vehicles. Fan operation, including variable speed, is electronically controlled. It is possible for the electrical circuitry in the fan control unit to overheat and fail, causing the fan to stop operating. If this were to occur, engine overheating and subsequent engine damage could result if vehicle continues to be operated, despite the warning provided by the coolant temperature gauge.

Please initial and route to the following for information before filing												
X	Service Manager		X	Warranty		X	Service Technicians - Initial Below					
X	Service Advisor		X	Parts Mgr.								
X	Service Advisor			Body Shop								
X	Shop Foreman			PDI Dept.								

★ ★ FIX IT RIGHT THE FIRST TIME, ON TIME, EVERY TIME ★ ★

For administrative convenience and to reduce costs, this bulletin may contain repair procedures for authorized BMW car centers and/or authorized BMW SAV centers. All references to SAVs and/or the X5 are ONLY intended for authorized BMW SAV centers. Furthermore, ONLY BMW SAV centers are authorized to perform repair and service work on SAVs.

© 2001 BMW of North America, LLC

by: VO

In addition, it is possible in some cases for the failure of the electrical circuitry to cause smoldering. In the extreme case, a fire in the fan control unit, which is mounted in the fan and located in the front of the engine compartment, could occur. This could happen either while the engine is running or after the ignition has been switched off since fan may run for up to 11 minutes after engine shutdown.

AFFECTED VEHICLES

This Recall Campaign involves certain Model Year 2001 E46 with manual transmission, and certain E38, E53, E52 and E39 vehicles.

In order to determine if a specific vehicle is affected by this Recall Campaign, it will be necessary to utilize the "Service Menu" of the DCS (Dealer Communication System). Based on the response of the system, either proceed with the corrective action or take no further action.

Corrective actions listed in this bulletin are only to be carried out on vehicles identified in DCS as having the following Open Campaign: 0064360100 SI 64 07 01.

The Chassis Number Ranges listed below are **only** for informational purposes and are not to be considered as the only deciding factor. These chassis numbers only pertain to the vehicles which require the repairs provided in this bulletin.

Model	**Chassis Number Range**
740i	DN85210 – DN89753
740iLA	DP25926 DP25931 DP25952 DP25960 DP25971 – DP34408
740iLP	DE05040 – DE05041
750iL	DD74561 DD74573 – DD74604
750iLP	DE35040 DE35041
Z8	AH60509 – AH61229

325i	EE25793
	EE25839 – EE25842
	EE25935 – EE25962
	EE26118
	EE26148
	EE26157 – EE26161
	EE26171 – EE26197
	EE26247
	EE26254
	EE26362
	EE26368
	EE26379
	FV02938 – FV02941
	FV03009 – FV04399
	NE55308
	NE55319
	NE55323 – NE55329
	NE55343 – NE55351
	NE55360 – NE56176
325xiT	EN80415 – EN80636
325Ci	JW48557
	JW48903 – JW49969
325Ci convertible	JY40799
	JY40945 – JY41811
330i	FT01376 – FT01379
	FT01429 – FT02372
330xi	JR79731
	JR79736 – JR80234
330Ci	JU23264 – JU24439
330Ci convertible	EV86726 – EV86727
	EV86827 – EV87571
M5	BZ98393 – BZ99697
530i	CE90571 – CE91973
530iA	CF04877
	CF04889
	CF04899
	CF04906
	CF04928 – CF14933
540i	GC96871 – GC98571
525iT	GD50120 – GD50260

525ITA	GD85103 – GD86220
525i	GF40563 – GF59999
540iA	GM71202 GM71213 – GM74059
540ITA	GN91705 – GN91975
525iA	GX20000 GX20193 – GX27907
X5 4.4i	LH14482 LH14699 LH14746 LH14760 LH14778 LH14853 LH14886 LH14899 LH14958 LH14965 – LH27182
X5 3.0I	LH78923 – LH79589
X5 3.0IA	LM76123 LM77243 LM77601 LM77632 LM77649 LM77732 LM77754 LM77788 LM77798 LM77842 LM77844 LM77921 LM77935 LM77956 LM78020 LM78041 – LM90999 LP20000 LP20021 – LP24703 LP24724 LP24730 LP24741 – LP24764

CORRECTION

On the affected vehicles check the part number on the electric fan shroud, and replace the fan/shroud assembly if necessary.

The Customer Notification Letter is attached.

PROCEDURE

E38, 7 Series vehicles:

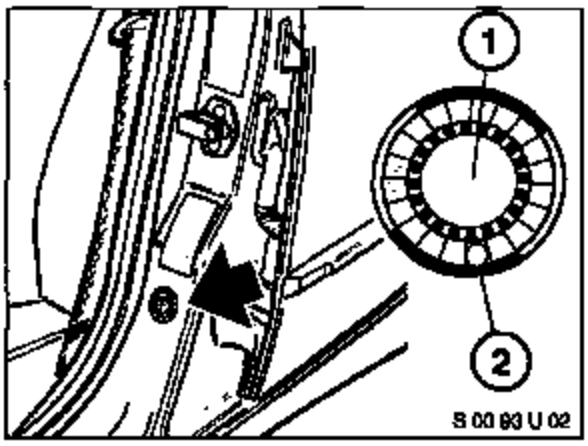

1. Check the Recall Campaign label affixed to the B-pillar.

   If the recall code number 316 is punched-out on the on the label (2), then NO further action is required.

   If the number differs from 316, or recall label is not found, then continue with step 2.

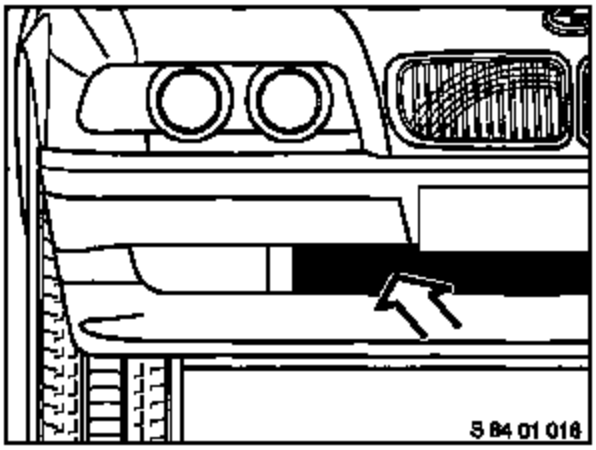

2. Check the BMW part number on the fan/shroud assembly. The part number is located on the lower right side of the shroud (molded next to the BMW logo, or on the label printed next to the logo). The number can be read from the outside, through the lower radiator grille (location indicated on the illustration).

   If the part number is: 64 54 6 921 383, then NO further action is required.

   If the part number differs from that listed, then continue with step 3.

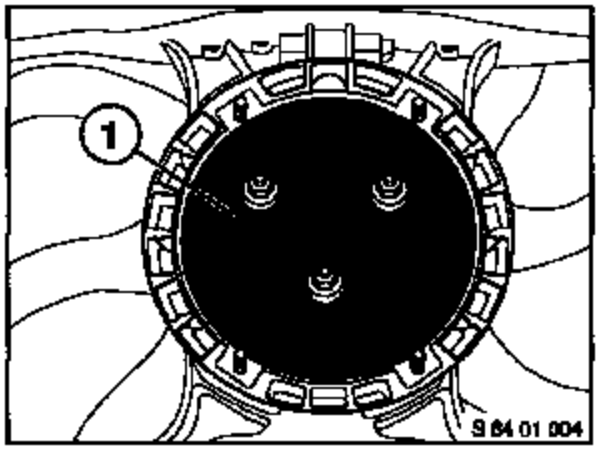

3. Remove front bumper. For removal/installation instructions refer to RA 51 11 000 (which can be found in the BMW Technical Information System – TIS).
4. Remove air-guiding ducts in front of radiator.
5. Remove electric auxiliary fan/shroud assembly, and inspect the back of the fan housing.

   If the motor housing (1) is solid black, without cutouts (as shown on the illustration), then NO further action is required. Reinstall all previously removed components.

   If the motor housing has cutouts and the aluminum body of the fan module can be seen, then replace electric auxiliary fan/shroud assembly with the new part - PN 64 54 6 921 383.

E39, 5 Series vehicles:

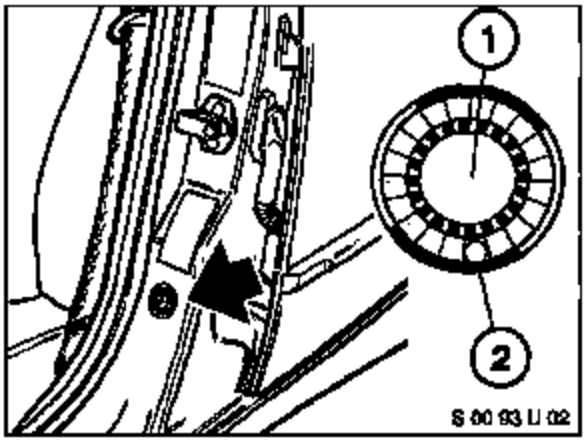

1. Check the Recall Campaign label affixed to the B-pillar:

   If the recall code number 316 is punched-out on the on the label (2), then NO further action is required.

   If the number differs from 316, or recall label is not found, then continue with step 2.

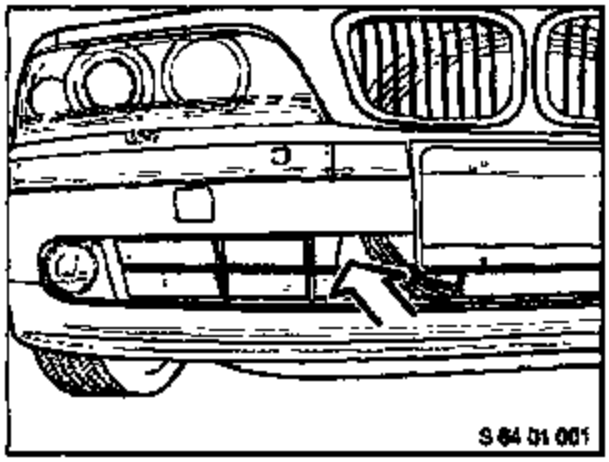

2. Check the BMW part number on the fan/shroud assembly. The part number is located on the lower right side of the shroud (molded next to the BMW logo, or on the label printed next to the logo). The number can be read from the outside, through the lower radiator grille (location indicated on the illustration).

   If the part number is: 64 54 6 921 395, then NO further action is required.

   If the part number differs from that listed, then continue with step 3.

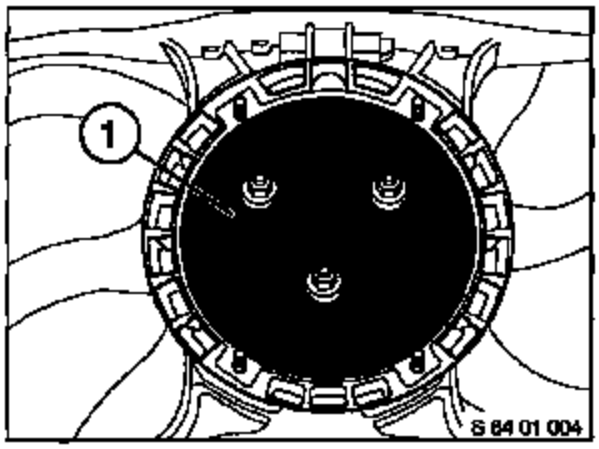

3. Remove front bumper. For removal/installation instructions refer to RA 51 11 000 (which can be found in the BMW Technical Information System – TIS).
4. Remove air-guiding ducts in front of radiator.
5. Remove electric auxiliary fan/shroud assembly, and inspect the back of the fan housing.

   If the motor housing (1) is solid black, without cutouts (as shown on the illustration), then NO further action is required. Reinstall all previously removed components.

   If the motor housing has cutouts and the aluminum body of the fan module can be seen, then replace electric auxiliary fan/shroud assembly with the new part - PN 64 54 6 921 395.

E46, 3 Series (with manual transmission) vehicles:

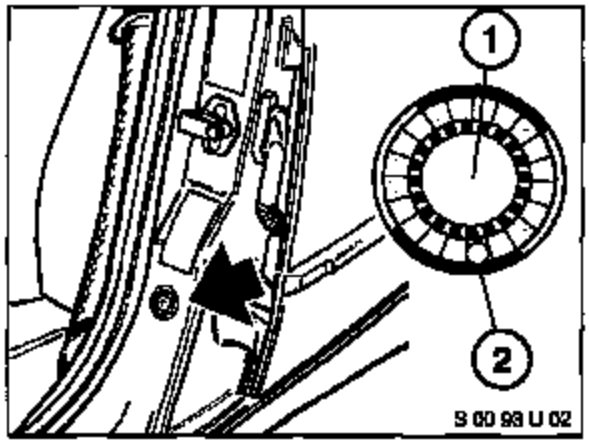

1. Check the Recall Campaign label affixed to the B-pillar:

   If the recall code number 316 is punched-out on the on the label (2), then NO further action is required.

   If the number differs from 316, or recall label is not found, then continue with step 2.

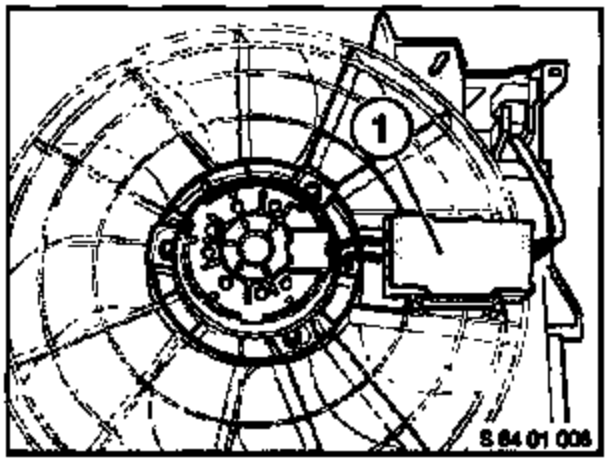

2. Check whether a fan with an external electronics box has been installed in the vehicle. The housing for the external electronics is installed on the fan shroud, between the fan and the engine block (1).

   If the electric fan with external electronics has been installed, then NO further action is required.

   If the electric fan with internal electronics has been installed, then continue with step 3.

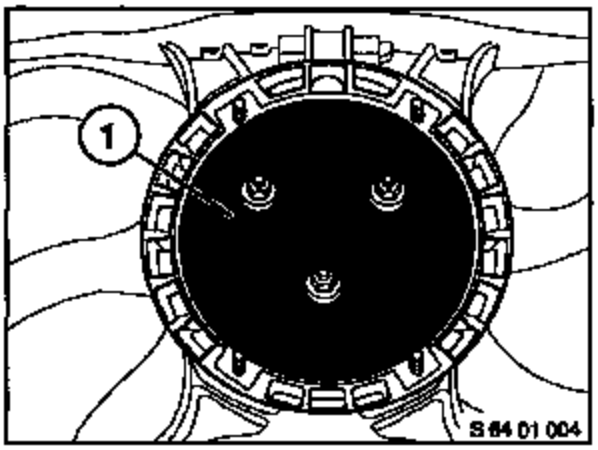

3. Remove electric fan/shroud assembly. For removal/installation instructions refer to TIS RA 17 11 031. Inspect the back of the fan housing:

   If the motor housing (1) is solid black, without cutouts (as shown on the illustration), then NO further action is required. Reinstall all previously removed components.

   If the motor housing has cutouts and the aluminum body of the fan module can be seen, then replace electric auxiliary fan/shroud assembly with the new part - PN 17 11 7 510 617.

E52, Z8 vehicles:

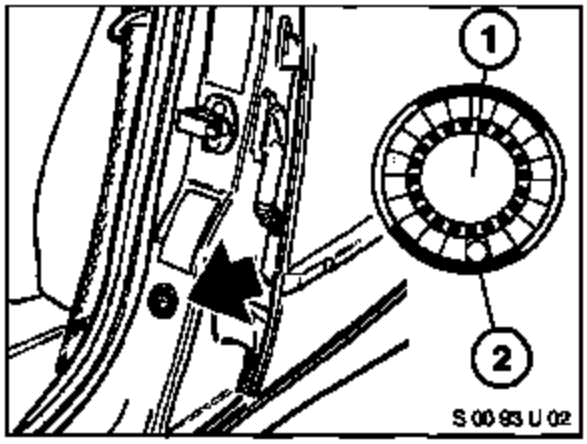

1. Check the Recall Campaign label affixed to the B-pillar:

   If the recall code number 316 is punched-out on the on the label (2), then NO further action is required.

   If the number differs from 316, or recall label is not found, then continue with step 2.

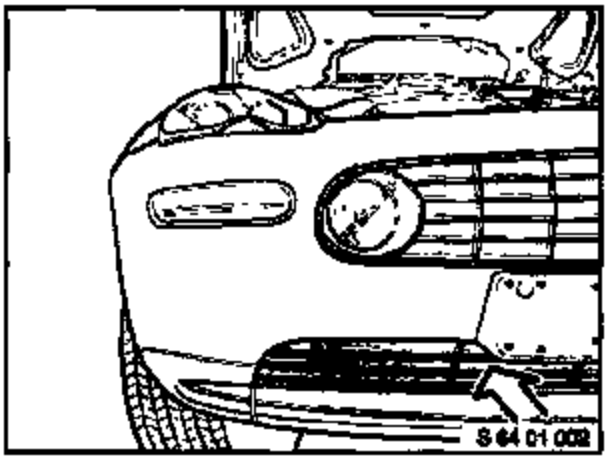

2. Check the BMW part number on the fan/shroud assembly. The part number is located on the lower right side of the shroud (molded next to the BMW logo, or on the label printed next to the logo). The number can be read from the outside, through the lower radiator grille (location indicated on the illustration).

   If the part number is: 64 54 6 921 383, then NO further action is required.

   If the part number differs from that listed, then continue with step 3.

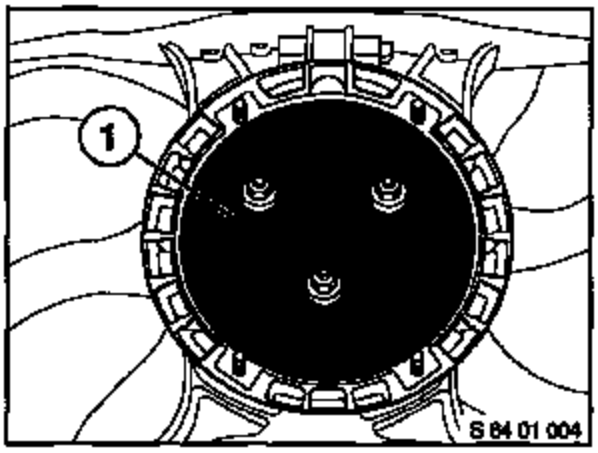

3. Remove top radiator cover and center air-guiding ducts.
4. Disconnect electrical connector to the auxiliary fan.
5. Remove electric auxiliary fan/shroud assembly, and inspect the back of the fan housing.

   If the motor housing (1) is solid black, without cutouts (as shown on the illustration), then NO further action is required. Reinstall all previously removed components.

   If the motor housing has cutouts and the aluminum body of the fan module can be seen, then replace electric auxiliary fan/shroud assembly with the new part - PN 64 54 6 921 383.

E53, X5 vehicles:

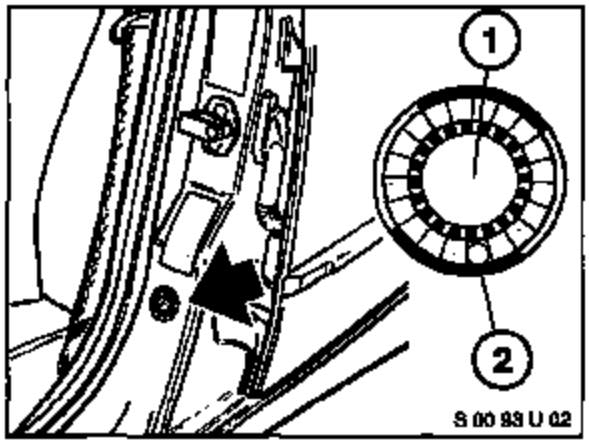

1. Check the Recall Campaign label affixed to the B-pillar:

   If the recall code number 316 is punched-out on the on the label (2), then NO further action is required.

   If the number differs from 316, or recall label is not found, then continue with step 2.

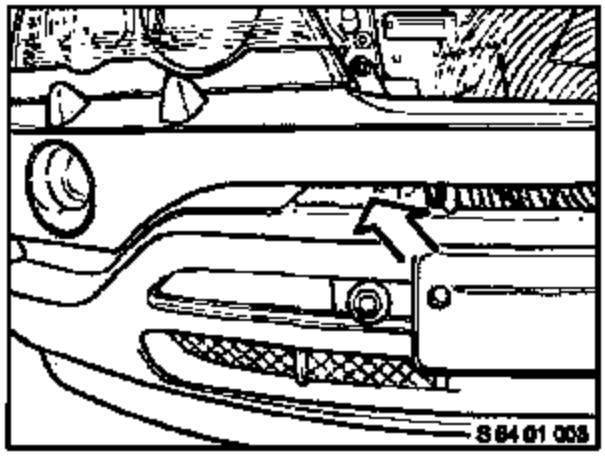

2. Check the BMW part number on the fan/shroud assembly. The part number is located on the lower right side of the shroud (molded next to the BMW logo, or on the label printed next to the logo). The number can be read from the outside, through the gap between bumper trim and the cover (location indicated on the illustration).

   If the part number is: 64 54 6 921 381, then NO further action is required.

   If the part number differs from that listed, then continue with step 3.

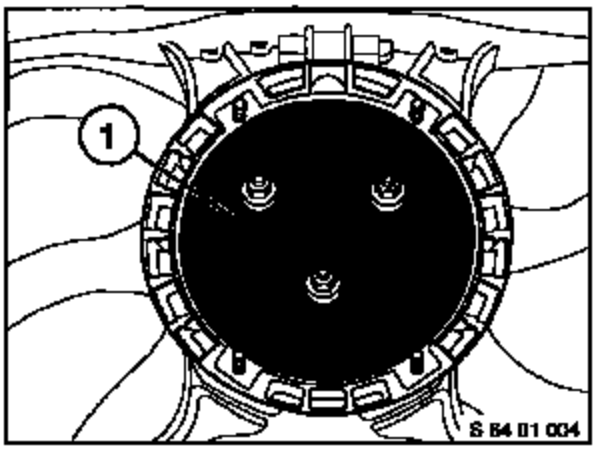

3. Remove electric fan/shroud assembly. For removal/installation instructions refer to TIS RA 17 40 000. Inspect the back of the fan housing:

   If the motor housing (1) is solid black, without cutouts (as shown on the illustration), then NO further action is required. Reinstall all previously removed components.

   If the motor housing has cutouts and the aluminum body of the fan module can be seen, then replace electric auxiliary fan/shroud assembly with the new part - PN 64 54 6 921 381.

PARTS INFORMATION

Part Number	Description	Quantity
17 11 7 510 617	Cooling fan E46 w. manual trans.	1
64 54 6 921 383	Pusher fan E38/E52 vehicles	1
64 54 6 921 395	Pusher fan E39 vehicles	1
64 54 6 921 381	Pusher fan E53 vehicles	1

LABEL INSTRUCTIONS

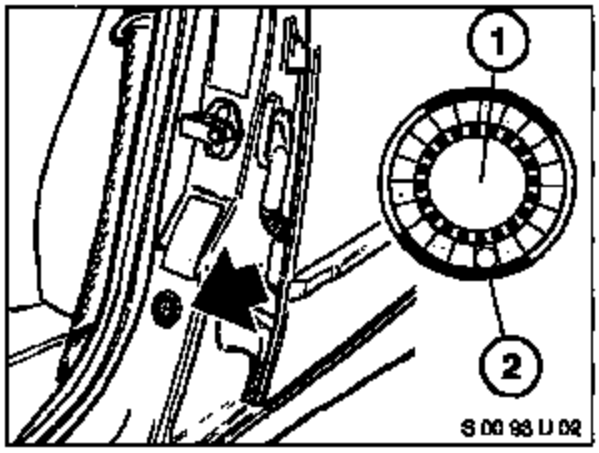

This Recall Campaign has been assigned code number **316**. After the vehicle has been checked, and corrected if necessary, obtain a label (SD 92-170) and:

a. emboss your BMW dealer warranty number in the middle of the label (1);

b. punch out code number **316** printed on the label and,

c. affix the label to the **B** pillar as shown.

If the vehicle already has a label from a previous Service Action/Recall Campaign, affix the new label next to the old one. Do not affix one label on top of another one because a number from an underlying label could appear in the punched-out hole of the new label.

WARRANTY INFORMATION

- Reimbursement for this Recall Campaign will be provided through Campaign Entry.
- If fan replacement is necessary, and the required improved part is not on hand, the customer should be provided with a **service loaner**. If all loaners are in use, BMW NA will reimburse for actual invoiced rental in sublet under the following defect code, up to a maximum of $49.00 per day (plus tax) for a maximum of five days under the terms of the "Self-Authorization Program". The BMW agreement with Enterprise Rent-A-Car should be utilized whenever possible to provide the best service to the customer.
- BMW NA needs to track the use of rentals required in conjunction with failures of the auxiliary fan motor. For this reason, a unique rental defect code: **11 00 99 99 ZZ** is being assigned. All rentals in conjunction with this repair, whether self-authorized or Market Team authorized, must use this defect code.
- Please do not use rental vendor codes PB, SA, ER, SR, WR or CR if rental is claimed for this repair only.

Defect Code	**00 64 36 01 00**
Work Package #1:	Check electric fan part number only (all models) without fan removal
Labor Operation:	00 53 092
Labor Allowance:	5 FRU

Work Package #2:	Check electric fan part number, remove fan and check housing only on E38 (740i/iL with headlight washing only), E39, E46, E52, & E53 vehicles	
Labor Operation:	00 53 108	
Labor Allowance:	5 FRU	E46
Labor Allowance:	10 FRU	E52 (Z8)
Labor Allowance:	16 FRU	E39 (Not applicable for M5)
Labor Allowance:	24 FRU	E53
Labor Operation:	00 53 109	
Labor Allowance:	11 FRU	E38 (740i/iL with headlight washing only)

Work Package #3:	Check electric fan part number, remove fan and check housing only on E38 (all 750iL & 740i/iL w/PDC & SRA), and E39, E53 vehicles with SRA only, or SRA and PDC	
Labor Operation:	00 53 111	
Labor Allowance:	12 FRU	E38 with PDC and SRA
Labor Operation:	00 53 109	
Labor Allowance:	17 FRU	E39 w/SRA, or w/SRA & PDC (Applicable for M5)
Labor Allowance:	25 FRU	E53 w/SRA, or w/SRA & PDC

Work Package #4:	Check and replace auxiliary/cooling fan on E38 (740i/iL with headlight washing only), E39, E46, E52, E53 vehicles	
Labor Operation:	00 53 094	E38 (740i/iL with SRA only)
Labor Allowance:	11 FRU	
Parts Allowance:	64 54 6 921 383 – Pusher fan; Qty.= 1	
Labor Operation:	00 53 093	E39 (Not applicable for M5)
Labor Allowance:	16 FRU	
Parts Allowance	64 54 6 921 395 – Cooling fan; Qty.= 1	
Labor Operation:	00 53 093	E46
Labor Allowance:	5 FRU	
Parts Allowance	17 11 7 510 617 – Cooling fan; Qty.= 1	
Labor Operation:	00 53 093	E52 (Z8)
Labor Allowance:	10 FRU	
Parts Allowance:	64 54 6 921 383 – Pusher fan; Qty.= 1	
Labor Operation:	00 53 093	E53
Labor Allowance:	24 FRU	
Parts Allowance	64 54 6 921 381 – Pusher fan; Qty.= 1	

Work Package #5:	Check and **replace** auxiliary/cooling fan on E38, E39, E53 vehicles with PDC <u>and</u> headlight washing system (SRA)	
Labor Operation:	00 53 096	E38 (all 750iL & 740i/iL w/PDC & SRA)
Labor Allowance:	12 FRU	
Parts Allowance:	64 54 6 921 383 – Pusher fan; Qty.= 1	
Labor Operation:	00 53 096	E39 (w/PDC & SRA)
Labor Allowance:	17 FRU	Applicable for M5
Parts Allowance	64 54 6 921 395 – Pusher fan; Qty.= 1	
Labor Operation:	00 53 096	E53 (w/PDC & SRA)
Labor Allowance:	26 FRU	
Parts Allowance	64 54 6 921 381 – Pusher fan; Qty.= 1	

Work Package #6:	Check and **replace** auxiliary/cooling fan on E39, E53 with PDC only	
Labor Operation:	00 53 095	E39 (w/PDC only)
Labor Allowance:	16 FRU	Not applicable for M5
Parts Allowance	64 54 6 921 395 – Pusher fan; Qty.= 1	
Labor Operation:	00 53 095	E53 (w/PDC only)
Labor Allowance:	25 FRU	
Parts Allowance	64 54 6 921 381 – Pusher fan; Qty.= 1	

Work Package #7:	Check and **replace** auxiliary/cooling fan on E39, E53 with headlight washer system (SRA) only	
Labor Operation:	00 53 094	E39 (w/SRA only)
Labor Allowance:	17 FRU	Applicable for M5
Parts Allowance	64 54 6 921 395 – Pusher fan; Qty.= 1	
Labor Operation:	00 53 094	E53 (w/SRA only)
Labor Allowance:	25 FRU	
Parts Allowance	64 54 6 921 381 – Pusher fan; Qty.= 1	

September 2001

Recall Campaign No. 01V-205, ENGINE AUXILIARY/COOLING FAN

Dear BMW Owner:

This notice is sent to you in accordance with the requirements of the National Traffic and Motor Vehicle Safety Act.

BMW AG has decided that a defect which relates to motor vehicle safety exists in certain 2001 Model Year vehicles. Our records indicate that you are the owner of a potentially affected vehicle.

You may already have received a recall notice for this campaign and may also have had the repair performed. Please note that this campaign is being reissued on all affected vehicles to incorporate an updated repair part.

THIS MEANS THAT EVEN IF YOUR VEHICLE HAS ALREADY BEEN REPAIRED FOR THIS PROBLEM, IT IS INVOLVED IN THIS REISSUED RECALL. PLEASE CONTACT YOUR BMW CENTER AS SOON AS POSSIBLE TO ARRANGE TO HAVE THE UPDATED REPAIR PART INSTALLED.

DESCRIPTION OF DEFECT

The potential defect involves the engine auxiliary/cooling fan of your vehicle.

Fan operation is electronically controlled. It is possible for the electrical circuitry in the fan control unit to overheat and fail, causing the fan to stop operating. If this were to occur, **engine overheating and subsequent engine damage could result if the warning provided by the coolant temperature gauge were ignored and you continued to drive.**

It is also possible in some cases for the failure of the electrical circuitry to cause **smoldering. In the extreme case, a fire in the fan control unit, which is mounted on the fan and located in the front of the engine compartment, could occur. This could happen either while the engine is running, or after the ignition has been switched off, since the fan may run for up to 11 minutes after engine shutdown.**

PRECAUTIONS

1. **CONTACT YOUR AUTHORIZED BMW CENTER IMMEDIATELY TO ARRANGE TO HAVE THE NECESSARY REPAIR PERFORMED AS SOON AS POSSIBLE.**
2. **Potential engine overheating will be indicated by the needle in the coolant temperature gauge moving from the approximate middle position to the red zone, and on some models by display of the message "COOLANT TEMPERATURE" in the instrument cluster.**

   In some cases, an electrical smell, or burning and/or smoke from the front of the vehicle may be noticed.

   Should any of these warnings occur, pull off the road to a safe location and switch off

the engine. If you notice an electrical smell, or burning and/or smoke from the front of the vehicle, do not open the hood. All occupants should carefully exit the vehicle and move to a location away from traffic. Contact BMW Roadside Assistance at 1-800-332-4269 immediately to have your vehicle brought to the nearest BMW center.

3. **If you are not the only driver of this vehicle, please advise all other drivers of this important information.**

DESCRIPTION OF REPAIR

The fan will be replaced with an improved version.

Replacement of the fan will take approximately one to three hours, depending on the vehicle model, and will be performed ***free of charge*** by your Authorized BMW center. Additional time may be required depending on the center's scheduling and processing. Call your Authorized BMW center for an appointment.

OTHER INFORMATION

If you are no longer the owner of this vehicle, we would appreciate your furnishing us with the name and address of the new owner, using the enclosed postage-paid card.

Should you have any questions about this campaign, please contact your Authorized BMW center.

We appreciate your confidence in our product, and we wish to do everything we can to retain your confidence. Should you need additional assistance, you may contact BMW Customer Relations at 1-800-831-1117.

If the BMW center is unable to remedy the defect without charge or within a reasonable period of time, you may notify the Administrator of the National Highway Traffic Safety Administration, Washington, DC 20590, or call the toll-free Auto Safety Hotline at 1-888-327-4236.

BMW OF NORTH AMERICA, LLC

SI B64 07 01
Heating and Air Conditioning

June 2002
Service Engineering

This Service Information bulletin supersedes SI 64 07 01 **dated December 2001**.

PERFORM THE PROCEDURE OUTLINED IN THIS SERVICE INFORMATION ON ALL AFFECTED VEHICLES IN STOCK PRIOR TO CUSTOMER DELIVERY, OR THE NEXT TIME THEY ARE IN THE SHOP FOR MAINTENANCE OR REPAIRS.

Under the National Traffic and Motor Vehicle Safety Act of 1966, as amended, if there has been a recall campaign, dealers must assure that all new vehicles and new items of replacement equipment are free of safety defects and comply with all applicable Federal Motor Vehicle Safety Standards at the time of delivery to the consumer. This means that dealers may not deliver new motor vehicles or new items of replacement equipment to consumers unless the safety defect or noncompliance has been remedied before delivery.

[redacted] designates changes to this revision

SUBJECT
Recall Campaign 01V-206: Engine Auxiliary/Cooling Fan - E46, E38, E39, E52, E53

MODEL
E46, 3 Series with manual transmission, produced 02/01/2001 up to 06/01/2001

E38, 7 Series from 11/01/2000 up to 07/27/2001

E39, 5 Series from 01/16/2001 up to 08/31/2001

E52, Z8 from 01/01/2001 up to 08/31/2001

E53, X5 from 12/18/2000 up to 09/05/2001

SITUATION
[redacted] The potential defect involves the engine auxiliary/cooling fan in certain MY 2001 BMW vehicles, and in approx. 1550 additional MY 1998-2001 E38, E39, E46, E52, and E53 vehicles manufactured outside the above listed production range.

Fan operation, including variable speed, is electronically controlled. It is possible for the electrical circuitry in the fan control unit to overheat and fail, causing the fan to stop operating. If this were to occur, engine overheating and subsequent engine damage could result if vehicle continues to be operated, despite the warning provided by the coolant temperature gauge.

In addition, it is possible in some cases for the failure of the electrical circuitry to cause smoldering. In the extreme case, a fire in the fan control unit, which is mounted in the fan and located in the front of the engine compartment, could occur. This could happen either while the engine is running or after the ignition has been switched off since fan may run for up to 11 minutes after engine shutdown.

AFFECTED VEHICLES
[redacted] This Recall Campaign involves certain Model Year 2001 E46 with manual transmission, E38, E53, E52 and E39 vehicles, as well as approximately additional 1550 vehicles MY 1998-2001 (E38, E39, E46, E52, and E53) produced outside of the original recall range, which had a potentially defective fan installed as a part of a

previous warranty repair.

In order to determine if a specific vehicle is affected by this Recall Campaign, it will be necessary to utilize the "Service Menu" of the DCS (Dealer Communication System). Based on the response of the system, either proceed with the corrective action or take no further action.

Corrective actions listed in this bulletin are only to be carried out on vehicles identified in DCS as having the following Open Campaign: 0064360100 SI 64 07 01.

The Chassis Number Ranges listed below are only for informational purposes and are not to be considered as the only deciding factor. These chassis numbers only pertain to the vehicles which require the repairs provided in this bulletin.

Model	Chassis Number Range
740i	DN85210 – DN89753
740iLA	DP25926
	DP25931
	DP25952
	DP25960
	DP25971 – DP34408
740iLP	DE05040 – DE05041
750iL	DD74561
	DD74573 – DD74804
750iLP	DE35040
	DE35041
Z8	AH60509 – AH61229
325i	EE25793
	EE25839 – EE25842
	EE25935 – EE25962
	EE26118
	EE26148
	EE26157 – EE26161
	EE26171 – EE26197
	EE26247
	EE26254
	EE26362

	EE26368
	EE26379
	FV02938 – FV02941
	FV03009 – FV04399
	NE55308
	NE55319
	NE55323 – NE55329
	NE55343 – NE55351
	NE55360 – NE56176
325xiT	EN80415 – EN80636
325Ci	JW48557
	JW48903 – JW49969
325Ci convertible	JY40799
	JY40945 – JY41611
330i	FT01376 – FT01379
	FT01429 – FT02372
330xi	JR79731
	JR79736 – JR80234
330Ci	JU23264 – JU24439
330Ci convertible	EV86726 – EV86727
	EV86827 – EV87571
M5	BZ98393 – BZ99697
530i	CE90571 – CE91973
530iA	CF04877
	CF04889
	CF04899
	CF04906
	CF04928 – CF14933
540i	GC96871 – GC98571
525iT	GD50120 – GD50260
525iTA	GD85103 – GD86220

525i	GF40563 – GF59999
540iA	GM71202
	GM71213 – GM74059
540iTA	GN91705 – GN91975
525iA	GX20000
	GX20193 – GX27907
X5 4.4i	LH14482
	LH14699
	LH14746
	LH14760
	LH14778
	LH14853
	LH14886
	LH14899
	LH14958
	LH14985 – LH27182
X5 3.0i	LH78923 – LH79589
X5 3.0iA	LM76123
	LM77243
	LM77601
	LM77632
	LM77649
	LM77732
	LM77754
	LM77788
	LM77796
	LM77842
	LM77844
	LM77921
	LM77935
	LM77956

LM78020

LM78041 – LM90999

LP20000

LP20021 – LP24703

LP24724

LP24730

LP24741 – LP24764

CORRECTION

On the affected vehicles check the part number on the electric fan shroud, and replace the fan/shroud assembly if necessary.

The Customer Notification Letter is attached.

PROCEDURE

E38, 7 Series vehicles:

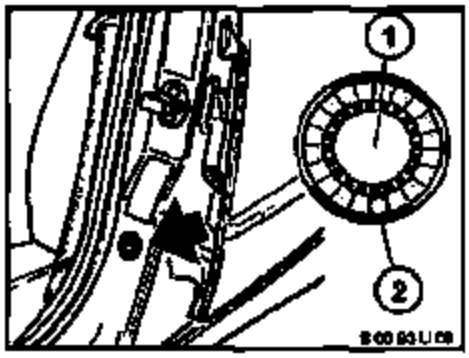

1. Check the Recall Campaign label affixed to the B-pillar:
If the recall code number 316 is punched-out on the on the label (2), then NO further action is required. If the number differs from 316, or recall label is not found, then continue with step 2.

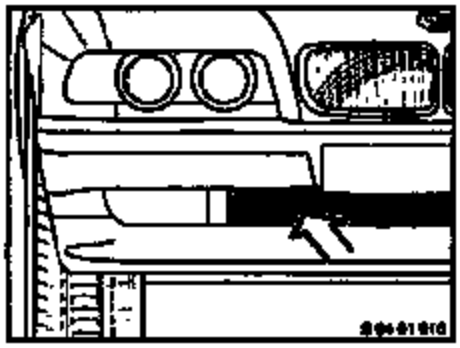

2. Check the BMW part number on the fan/shroud assembly. The part number is located on the lower right side of the shroud (molded next to the BMW logo, or on the label printed next to the logo). The number can be read from the outside, through the lower radiator grille (location indicated on the illustration).
If the part number is: 64 54 6 921 383 or 64 54 6 921 942, then NO further action is required. If the part number differs from that listed, then continue with step 3.

3. Remove front bumper. For removal/installation instructions refer to RA 51 11 000 (which can be found in the BMW Technical Information System – TIS).
4. Remove air-guiding ducts in front of radiator.
5. Remove electric auxiliary fan/shroud assembly, and inspect the back of the fan housing.
If the motor housing (1) is solid black, without cutouts (as shown on the illustration), then NO further action is required. Reinstall all previously

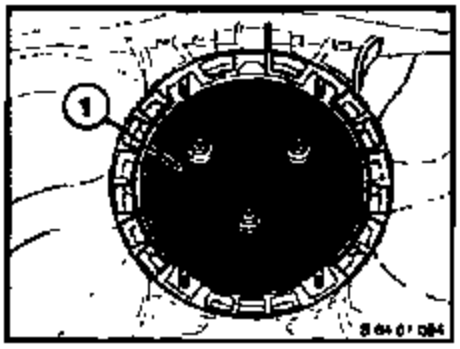

removed components.
If the motor housing has cutouts and the aluminum body of the fan module can be seen, then replace electric auxiliary fan/shroud assembly with the new part - PN 64 54 6 921 942.

E39, 5 Series vehicles:

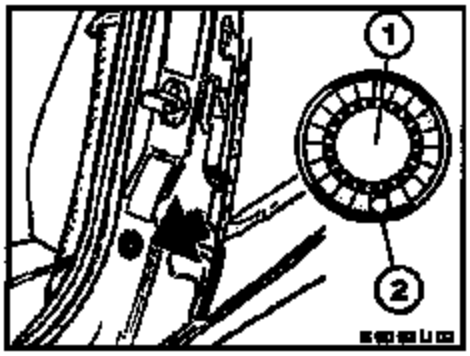

1. Check the Recall Campaign label affixed to the B-pillar:
If the recall code number 316 is punched-out on the on the label (2), then NO further action is required. If the number differs from 316, or recall label is not found, then continue with step 2.

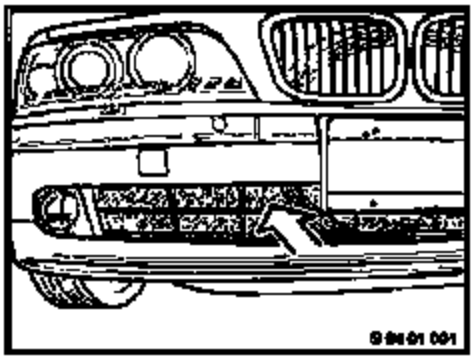

2. Check the BMW part number on the fan/shroud assembly. The part number is located on the lower right side of the shroud (molded next to the BMW logo, or on the label printed next to the logo). The number can be read from the outside, through the lower radiator grille (location indicated on the illustration).
If the part number is: 64 54 6 921 395, then NO further action is required.
If the part number differs from that listed, then continue with step 3.

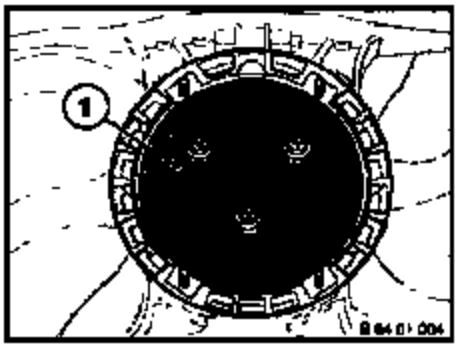

3. Remove front bumper. For removal/installation instructions refer to RA 51 11 000 (which can be found in the BMW Technical Information System – TIS).
4. Remove air-guiding ducts in front of radiator.
5. Remove electric auxiliary fan/shroud assembly, and inspect the back of the fan housing.
If the motor housing (1) is solid black, without cutouts (as shown on the illustration), then NO further action is required. Reinstall all previously removed components.
If the motor housing has cutouts and the aluminum body of the fan module can be seen, then replace electric auxiliary fan/shroud assembly with the new part - PN 64 54 6 921 395.

E46, 3 Series (with manual transmission) vehicles:

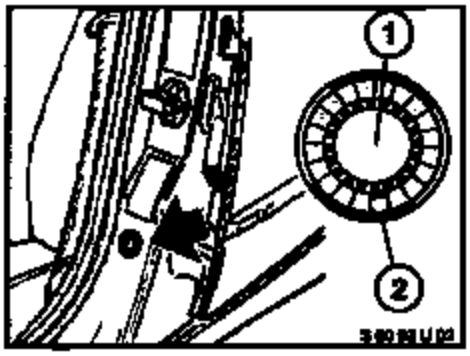

1. Check the Recall Campaign label affixed to the B-pillar:
If the recall code number 316 is punched-out on the on the label (2), then NO further action is required. If the number differs from 316, or recall label is not found, then continue with step 2.

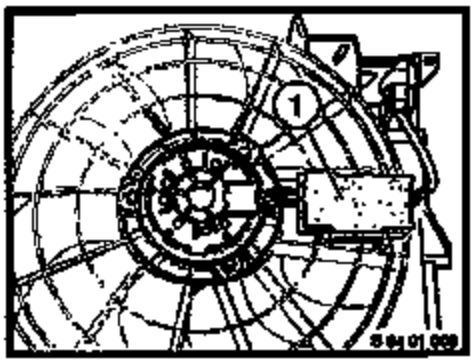

2. Check whether a fan with an external electronics box has been installed in the vehicle. The housing for the external electronics is installed on the fan shroud, between the fan and the engine block (1).
If the electric fan with external electronics has been installed, then NO further action is required.
If the electric fan with internal electronics has been installed, then continue with step 3.

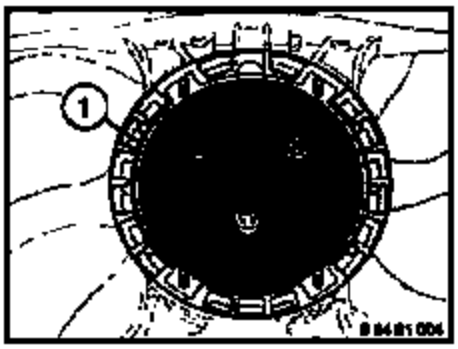

3. Remove electric fan/shroud assembly. For removal/installation instructions refer to TIS RA 17 11 031. Inspect the back of the fan housing:
If the motor housing (1) is solid black, without cutouts (as shown on the illustration), then NO further action is required. Reinstall all previously removed components.
If the motor housing has cutouts and the aluminum body of the fan module can be seen, then replace electric auxiliary fan/shroud assembly with the new part - PN 17 11 7 510 617.

E52, Z8 vehicles:

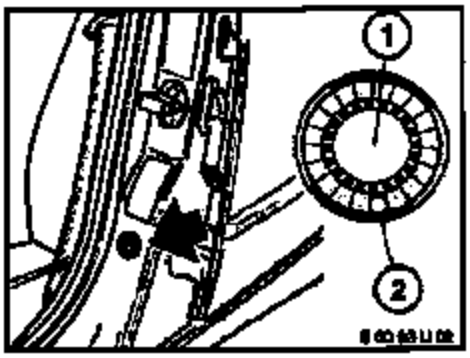

1. Check the Recall Campaign label affixed to the B-pillar:
If the recall code number 316 is punched-out on the on the label (2), then NO further action is required. If the number differs from 316, or recall label is not found, then continue with step 2.

2. Check the BMW part number on the fan/shroud assembly. The part number is located on the lower right side of the shroud (molded next to the BMW logo, or on the label printed next to the logo). The number can be read from the outside, through the

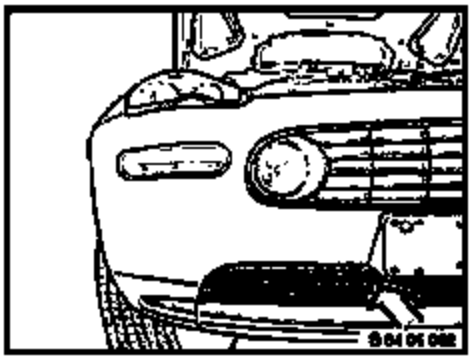

lower radiator grille (location indicated on the illustration).

If the part number is: 64 54 6 921 383 or 64 54 6 921 942, then NO further action is required.
If the part number differs from that listed, then continue with step 3.

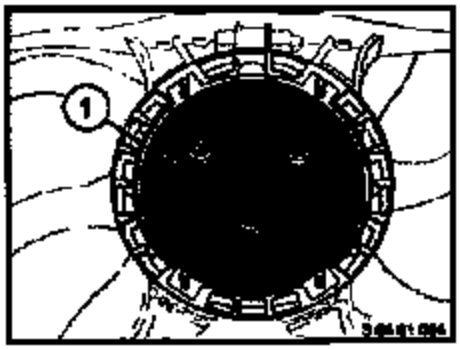

3. Remove top radiator cover and center air-guiding ducts.
4. Disconnect electrical connector to the auxiliary fan.
5. Remove electric auxiliary fan/shroud assembly, and inspect the back of the fan housing.
If the motor housing (1) is solid black, without cutouts (as shown on the illustration), then NO further action is required. Reinstall all previously removed components.
If the motor housing has cutouts and the aluminum body of the fan module can be seen, then replace electric auxiliary fan/shroud assembly with the new part - PN 64 54 6 921 942.

E53, X5 vehicles:

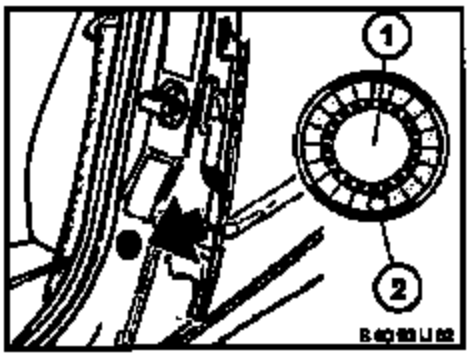

1. Check the Recall Campaign label affixed to the B-pillar:
If the recall code number 316 is punched-out on the on the label (2), then NO further action is required.
If the number differs from 316, or recall label is not found, then continue with step 2.

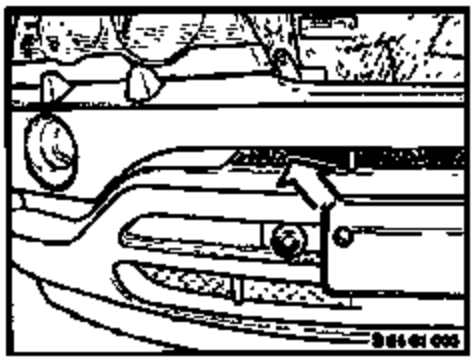

2. Check the BMW part number on the fan/shroud assembly. The part number is located on the lower right side of the shroud (molded next to the BMW logo, or on the label printed next to the logo). The number can be read from the outside, through the gap between bumper trim and the cover (location indicated on the illustration).
If the part number is: 64 54 6 921 381 or 64 54 6 921 940, then NO further action is required.
If the part number differs from that listed, then continue with step 3.

3. Remove electric fan/shroud assembly. For removal/installation instructions refer to TIS RA 17 40

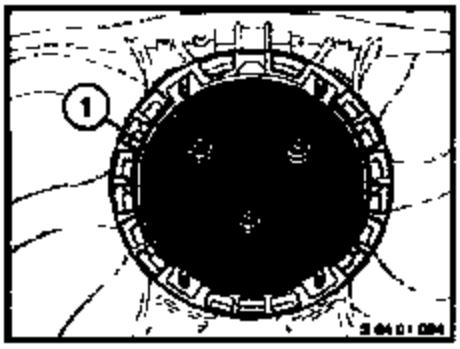

000. Inspect the back of the fan housing:
If the motor housing (1) is solid black, without cutouts (as shown on the illustration), then NO further action is required. Reinstall all previously removed components.
If the motor housing has cutouts and the aluminum body of the fan module can be seen, then replace electric auxiliary fan/shroud assembly with the new part - PN 64 54 6 921 940.

PARTS INFORMATION

Part Number	Description	Quantity
17 11 7 510 617	Cooling fan E46 w. manual trans.	1
64 54 6 921 942	Pusher fan E38/E52 vehicles	1
64 54 6 921 395	Pusher fan E39 vehicles	1
64 54 6 921 940	Pusher fan E53 vehicles	1

LABEL INSTRUCTIONS

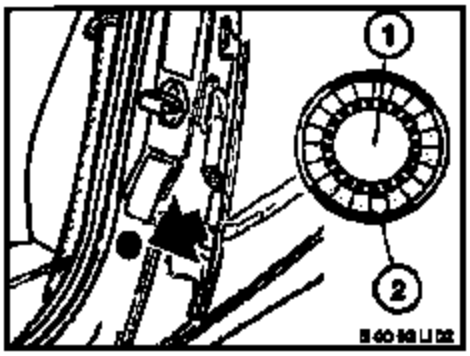

This Recall Campaign has been assigned code number **316**. After the vehicle has been checked, and corrected if necessary, obtain a label (SD 92-170) and:
a. emboss your BMW dealer warranty number in the middle of the label (1);
b. punch out code number **316** printed on the label and,
c. affix the label to the **B** pillar as shown.

If the vehicle already has a label from a previous Service Action/Recall Campaign, affix the new label next to the old one. Do not affix one label on top of another one because a number from an underlying label could appear in the punched-out hole of the new label.

WARRANTY INFORMATION

- Reimbursement for this Recall Campaign will be provided through Campaign Entry.
- If fan replacement is necessary, and the required improved part is not on hand, the customer should be provided with a **service loaner**. If all loaners are in use, BMW NA will reimburse for actual invoiced rental in sublet under the following defect code, up to a maximum of $49.00 per day (plus tax) for a maximum of five days under the terms of the "Self-Authorization Program". The BMW agreement with Enterprise Rent-A-Car should be utilized whenever possible to provide the best service to the customer.
- BMW NA needs to track the use of rentals required in conjunction with failures of the auxiliary fan motor. For this reason, a unique rental defect code: **11 00 99 99 ZZ** is being assigned. All rentals in conjunction with this repair, whether self-authorized or Market Team authorized, must use this defect code.

- Please do not use rental vendor codes PB, SA, ER, SR, WR or CR if rental is claimed for this repair only.

Defect Code	**00 64 36 01 00**	
Work Package #1:	Check electric fan part number only (all models) without fan removal	
Labor Operation:	00 53 092	
Labor Allowance:	5 FRU	
Work Package #2:	Check electric fan part number, remove fan and check housing only on E38 (740i/iL with headlight washing only), E39, E46, E52, & E53 vehicles	
Labor Operation:	00 53 108	
Labor Allowance:	5 FRU	E46
Labor Allowance:	10 FRU	E52 (Z8)
Labor Allowance:	16 FRU	E39 (Not applicable for M5)
Labor Allowance:	24 FRU	E53
Labor Operation:	00 53 109	
Labor Allowance:	11 FRU	E38 (740i/iL with headlight washing only)
Work Package #3:	Check electric fan part number, remove fan and check housing only on E38 (all 750iL & 740i/iL w/PDC & SRA), and E39, E53 vehicles with SRA only, or SRA and PDC	
Labor Operation:	00 53 111	
Labor Allowance:	12 FRU	E38 with PDC and SRA
Labor Operation:	00 53 109	
Labor Allowance:	17 FRU	E39 w/SRA, or w/SRA & PDC (Applicable for M5)
Labor Allowance:	25 FRU	E53 w/SRA, or w/SRA & PDC
Work Package #4:	Check and **replace** auxiliary/cooling fan on E38 (740i/iL with headlight washing only),	

E39, E46, E52, E53 vehicles

Labor Operation: 00 53 094 E38 (740i/iL with SRA only)

Labor Allowance: 11 FRU

[redacted] Parts Allowance: 64 54 6 921 942 – Pusher fan; Qty.= 1

Labor Operation: 00 53 093 E39 (Not applicable for M5)

Labor Allowance: 16 FRU

Parts Allowance 64 54 6 921 395 – Cooling fan; Qty.= 1

Labor Operation: 00 53 093 E46

Labor Allowance: 5 FRU

Parts Allowance 17 11 7 510 617 – Cooling fan; Qty.= 1

Labor Operation: 00 53 093 E52 (Z8)

Labor Allowance: 10 FRU

[redacted] Parts Allowance: 64 54 6 921 942 – Pusher fan; Qty.= 1

Labor Operation: 00 53 093 E53

Labor Allowance: 24 FRU

[redacted] Parts Allowance 64 54 6 921 940 – Pusher fan; Qty.= 1

Work Package #5: Check and **replace** auxiliary/cooling fan on E38, E39, E53 vehicles with PDC **and** headlight washing system (SRA)

Labor Operation: 00 53 096 E38 (all 750iL & 740i/iL w/PDC & SRA)

Labor Allowance: 12 FRU

[redacted] Parts Allowance: 64 54 6 921 942 – Pusher fan; Qty.= 1

Labor Operation: 00 53 096 E39 (w/PDC & SRA)

Labor Allowance: 17 FRU Applicable for M5

Parts Allowance 64 54 6 921 395 – Pusher fan; Qty.= 1

Labor Operation: 00 53 096 E53 (w/PDC & SRA)

Labor Allowance: 26 FRU

[redacted] Parts Allowance 64 54 6 921 940 – Pusher fan; Qty.= 1

Work Package #6: Check and **replace** auxiliary/cooling fan on E39, E53 with PDC only

Labor Operation:	00 53 095	E39 (w/PDC only)
Labor Allowance:	16 FRU	Not applicable for M5
Parts Allowance	64 54 6 921 395 – Pusher fan; Qty.= 1	
Labor Operation:	00 53 095	E53 (w/PDC only)
Labor Allowance:	25 FRU	
[redacted] Parts Allowance	64 54 6 921 940 – Pusher fan; Qty.= 1	
Work Package #7:	Check and **replace** auxiliary/cooling fan on E39, E53 with headlight washer system (SRA) only	
Labor Operation:	00 53 094	E39 (w/SRA only)
Labor Allowance:	17 FRU	Applicable for M5
Parts Allowance	64 54 6 921 395 – Pusher fan; Qty.= 1	
Labor Operation:	00 53 094	E53 (w/SRA only)
Labor Allowance:	25 FRU	
[redacted] Parts Allowance	64 54 6 921 940 – Pusher fan; Qty.= 1	

ATTACHMENTS
view PDF attachment **640701Letter**.

[Copyright © 2002 BMW of North America, LLC]

June 2002

Recall Campaign No. 01V-206, ENGINE AUXILIARY/COOLING FAN

Dear BMW Owner:

This notice is sent to you in accordance with the requirements of the National Traffic and Motor Vehicle Safety Act.

BMW AG has decided that a defect which relates to motor vehicle safety exists in the engine cooling fan which was installed as a replacement part in certain 1998-2001 Model Year vehicles. Our records indicate that you are the owner of a potentially affected vehicle with such a cooling fan replacement history.

According to our records, a potentially defective engine cooling fan was installed as a replacement part during your ownership or previous ownership of your vehicle. This recall campaign involves that replacement fan.

THIS MEANS THAT, EVEN IF YOUR ENGINE COOLING FAN HAS ALREADY BEEN REPLACED, IT IS INVOLVED IN THIS RECALL.

PLEASE CONTACT YOUR BMW CENTER AS SOON AS POSSIBLE TO ARRANGE TO HAVE THE UPDATED REPAIR PART INSTALLED.

DESCRIPTION OF DEFECT

The potential defect involves the engine auxiliary/cooling fan of your vehicle.

Fan operation is electronically controlled. It is possible for the electrical circuitry in the fan control unit to overheat and fail, causing the fan to stop operating. If this were to occur, **engine overheating and subsequent engine damage could result if the warning provided by the coolant temperature gauge were ignored and you continued to drive.**

It is also possible in some cases for the failure of the electrical circuitry to cause **smoldering. In the extreme case, a fire in the fan control unit, which is mounted on the fan and located in the front of the engine compartment, could occur. This could happen either while the engine is running, or after the ignition has been switched off, since the fan may run for up to 11 minutes after engine shutdown.**

PRECAUTIONS

1. **CONTACT YOUR AUTHORIZED BMW CENTER IMMEDIATELY TO ARRANGE TO HAVE THE NECESSARY REPAIR PERFORMED AS SOON AS POSSIBLE.**
2. **Potential engine overheating will be indicated by the needle in the coolant temperature gauge moving from the approximate middle position to the red**

zone, and on some models by display of the message "COOLANT TEMPERATURE" in the instrument cluster.

In some cases, an electrical smell, or burning and/or smoke from the front of the vehicle may be noticed.

Should any of these warnings occur, pull off the road to a safe location and switch off the engine. If you notice an electrical smell, or burning and/or smoke from the front of the vehicle, do not open the hood. All occupants should carefully exit the vehicle and move to a location away from traffic. Contact BMW Roadside Assistance at 1-800-332-4269 immediately to have your vehicle brought to the nearest BMW center.

3. **If you are not the only driver of this vehicle, please advise all other drivers of this important information.**

DESCRIPTION OF REPAIR

The fan will be replaced with an improved version.

Replacement of the fan will take approximately one to three hours, depending on the vehicle model, and will be performed ***free of charge*** by your Authorized BMW center. Additional time may be required depending on the center's scheduling and processing. Call your Authorized BMW center for an appointment.

OTHER INFORMATION

If you are no longer the owner of this vehicle, we would appreciate your furnishing us with the name and address of the new owner, using the enclosed postage-paid card.

Should you have any questions about this campaign, please contact your Authorized BMW center.

We appreciate your confidence in our product, and we wish to do everything we can to retain your confidence. Should you need additional assistance, you may contact BMW Customer Relations at 1-800-831-1117.

If the BMW center is unable to remedy the defect without charge or within a reasonable period of time, you may notify the Administrator of the National Highway Traffic Safety Administration, Washington, DC 20590, or call the toll-free Auto Safety Hotline at 1-888-327-4236.

BMW OF NORTH AMERICA, LLC