SUZUKI

AMERICAN SUZUKI MOTOR CORPORATION

RECEIVED
VS-215

04V-350
(12 pages)

July 13, 2004

2004 JUL 19 A 11:00

OFFICE OF
DEFECTS INVESTIGATION

Mr. Kenneth N. Weinstein
Associate Administrator for Safety Assurance
National Highway Traffic Safety Administration
400 7th Street, S.W.
Washington, D.C. 20590

Dear Mr. Weinstein:

The following information is submitted in accordance with the defect reporting regulations in Title 49 of the Code of Federal Regulations, Part 573.

1. Name of Manufacturer and Importer

Manufacturer: Suzuki Motor Corporation

Importer: American Suzuki Motor Corporation

2. Identification of Motor Vehicles Potentially Involved

Affected vehicles are all 1999-2004 VZ800 motorcycles certified to California emission standards ("California-specification VZ800 motorcycles"). California-specification VZ800 motorcycles are equipped with an evaporative emission control system. This system is not equipped on VZ800 motorcycles that are not certified to California emission standards.

Attached is a listing of the Vehicle Identification Numbers of California-specification VZ800 motorcycles produced for model years 1999-2004. California-specification VZ800 motorcycles can be distinguished from non-California-specification VZ800 motorcycles by the compliance statement that appears on the Vehicle Emission Control Information label that is affixed to the motorcycle frame. The compliance statement on the label for California-specification VZ800 motorcycles states "...conforms to U.S. EPA and California regulations ..." The compliance statement for non-California-specification VZ800 motorcycles states "... conforms to U.S. EPA regulations ..."

Affected motorcycles were produced from November, 1998 to November, 2003.

3. Total Number of Motor Vehicles Involved

849 motorcycles

4. Percentage of Motor Vehicles Estimated to Contain the Defect

100%

5. Description of Defect

Illustration #1 shows the layout of the California-specification VZ800 evaporative emission control system. When a subject motorcycle is parked after city driving in heavy traffic, under some conditions elevated pressure in the fuel tank vent line due to restricted flow through the carbon canister, can cause backpressure in the carburetor vent lines through the surge control valve. Due to the orientation of the rear carburetor, this can on some occasions cause liquid fuel from the rear carburetor float bowl to overflow into the rear carburetor air filter box. In the presence of an ignition source, this fuel can cause a fire.

6. Chronology of Principal Events

July, 2001	- Suzuki Motor Corporation ("SMC") received a report from American Suzuki about a VZ800 carburetor overflow problem.
April, 2002	- SMC received a report from American Suzuki about VZ800 engine starting difficulty. SMC requested American Suzuki to provide information about any further reports and to collect parts for investigation.
January, 2004	- SMC received a report from American Suzuki concerning fuel overflow into the rear air filter box of a VZ800 motorcycle. SMC conducted an evaluation of the motorcycle exhibiting this problem, and initiated an investigation to determine the cause and extent of the condition.

7. Description of Corrective Action

Suzuki will conduct a safety-related recall to correct the defect in affected motorcycles. The carbon canister on affected motorcycles will be replaced with a new-design canister and associated vent line changes will be made. The new canister has reduced backpressure due to a revised structure and an additional port for separate routing of fuel tank vapors and carburetor vapors to the carbon canister. Illustration #2 (attached) shows the layout of the new evaporative emission control system. The vacuum hose routing diagram on affected motorcycles will also be updated to show the new system design.

American Suzuki currently anticipates that it will notify owners of affected vehicles about the recall during the first week of August, 2004.

8. Copy of Notices

Attached is a copy of the recall notification letter that Suzuki Motor Corporation sent to American Suzuki Motor Corporation. Copies of other notices will be provided when they have been finalized.

9. Suzuki Campaign Number

2067

Sincerely,

AMERICAN SUZUKI MOTOR CORPORATION

for

Kenneth M. Bush
Regulations Manager
Government Relations Department

ILLUSTRATION #1

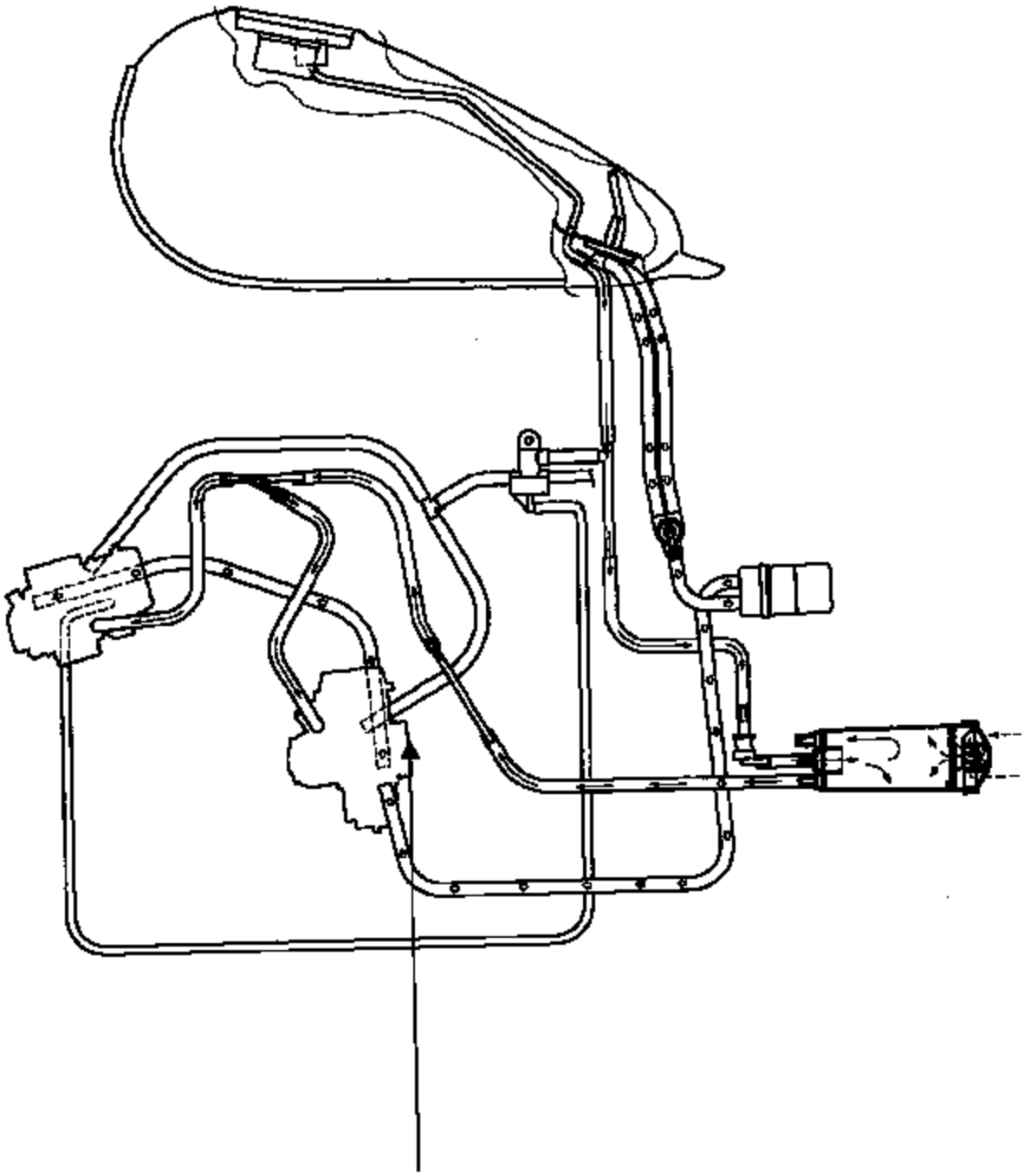

Rear Carburetor Inlet From Air Cleaner

ILLUSTRATION #2

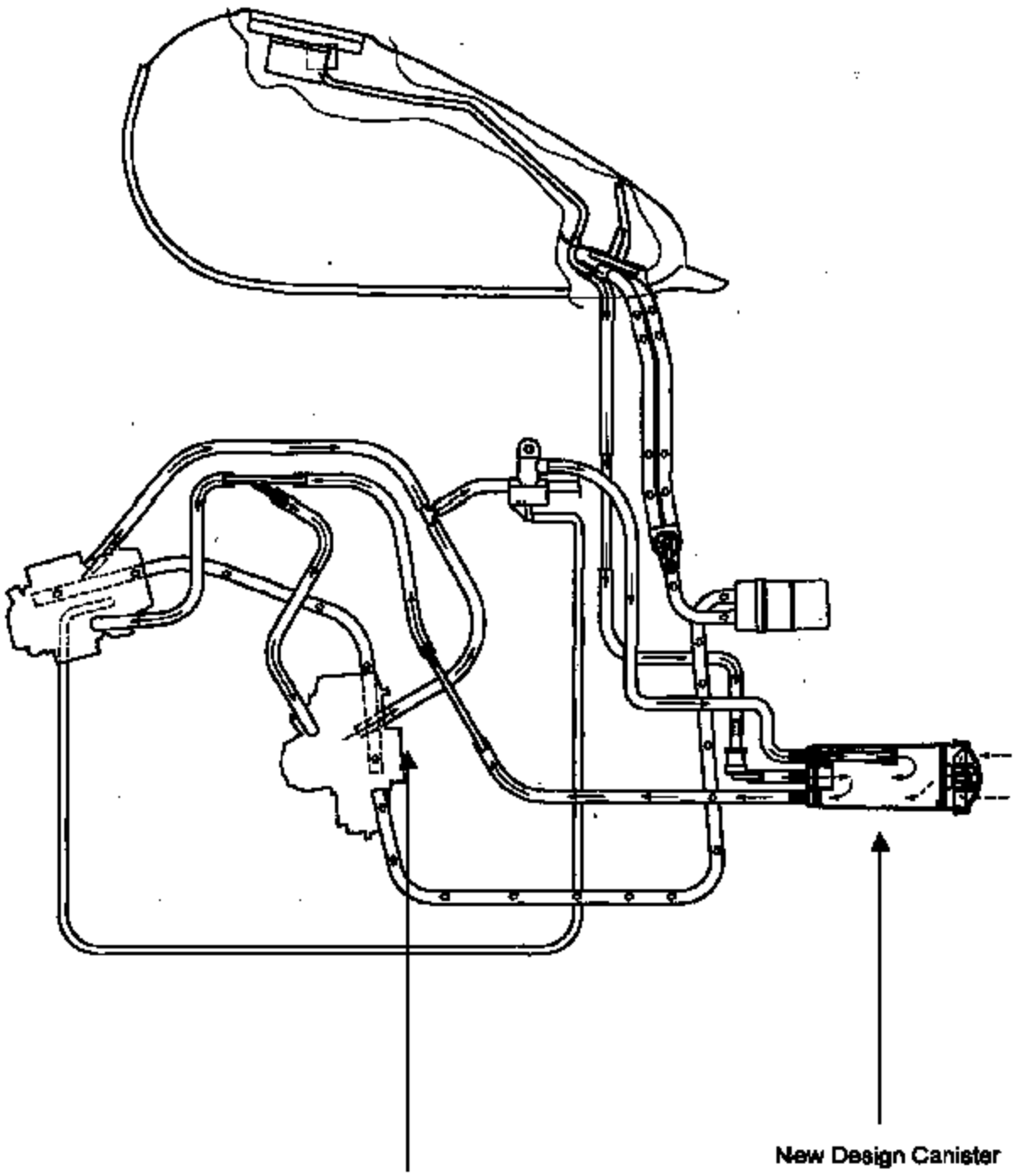

SUZUKI

SUZUKI MOTOR CORPORATION
MOTORCYCLE SERVICE DEPARTMENT

Date: July 12, 2004

TO : American Suzuki Motor Corporation

ATTN: Mr. M Kato, President

Mr. N.Fukui, Executive Director

Subject : Recall Campaign for Canister and Evaporative system on VZ800 E33 spec.

We have found that there is a possibility of fuel overflow from carburetor resulting possible engine misfiring or engine stall. In the worst case, overflowed fuel can cause a fire.

In view of the nature of the problem, we have decided to carry out the RECALL CAMPAIGN to replace the canister and change the hose routing in order to prevent above-mentioned problem.

To carry out this campaign, we kindly request you to start the following preparations.

1. Report this recall campaign to your authorities.
2. Notify all dealers by Service Bulletin not to sell the affected units prior to the completion of the recall campaign. Also notify the dealers to carry out the recall campaign promptly and properly.
3. Notify all customers by means of issuing the Recall Notice Letter to bring the affected unit to Suzuki Authorized Dealer for the recall campaign as soon as possible.
   As to the sample letters, please refer to the past campaign letters.

We apologize for any inconveniences this may cause to you and your customers.
We would appreciate your maximum cooperation in carrying out this campaign.

Yours sincerely,

H. Nakamura

T.Machii
General Manager
Motorcycle service Dept.

1.Affected Model

VZ800X/Y/K1/K2/K3/K4 E33(California)specification only

2. Modification procedure and parts

The replacement parts and replacement procedure will be sent to you separately.
After replacing the necessary parts, please issue the warranty applications as below.

Applicable model	:	VZ800
Claim category	:	2
Trouble code	:	99-BR
Causal part number	:	17210-26E00
Causal part name	:	Canister
Quantity	:	0 (zero)
Job code	:	FB9999
Labor	:	2.0 hours

3. Modification parts delivery

We will send the modification parts kit in accordance with equally to the number of units exported to your company on a F.O.C basis.
Shipping schedule and amount will be informed to you separately.
The replaced old parts should be scrapped at your dealer side.

End

1999 - 2004 California-specification VZ800

VIN	VIN	VIN	VIN
JS1VS53A812101255	JS1VS53A812101868	JS1VS53A112102599	JS1VS53A912103757
JS1VS53AX12101256	JS1VS53AX12101869	JS1VS53A412102600	JS1VS53A012103758
JS1VS53A112101257	JS1VS53A612101870	JS1VS53A612102601	JS1VS53A212103759
JS1VS53A312101258	JS1VS53A812101871	JS1VS53A812102602	JS1VS53A912103760
JS1VS53A512101259	JS1VS53AX12101872	JS1VS53AX12102603	JS1VS53A012103761
JS1VS53A112101260	JS1VS53A112101873	JS1VS53A112102604	JS1VS53A212103762
JS1VS53A312101261	JS1VS53A312101874	JS1VS53A312102605	JS1VS53A412103763
JS1VS53A512101262	JS1VS53A512101875	JS1VS53A512102606	JS1VS53A612103764
JS1VS53A712101263	JS1VS53A712101876	JS1VS53A712102607	JS1VS53A812103765
JS1VS53A912101264	JS1VS53A912101877	JS1VS53A912102608	JS1VS53AX12103766
JS1VS53A012101265	JS1VS53A012101878	JS1VS53A012102609	JS1VS53A112103767
JS1VS53A212101266	JS1VS53A212101879	JS1VS53A712102610	JS1VS53A312103768
JS1VS53A412101267	JS1VS53A912101880	JS1VS53A912102611	JS1VS53A512103769
JS1VS53A612101268	JS1VS53A012101881	JS1VS53A012102612	JS1VS53A112103770
JS1VS53A812101269	JS1VS53A212101882	JS1VS53A212102613	JS1VS53A312103771
JS1VS53A412101270	JS1VS53A412101883	JS1VS53A412102614	JS1VS53A512103772
JS1VS53A612101271	JS1VS53A612101884	JS1VS53A612102615	JS1VS53A712103773
JS1VS53A812101272	JS1VS53A812101885	JS1VS53A812102616	JS1VS53A912103774
JS1VS53AX12101273	JS1VS53AX12101886	JS1VS53AX12102617	JS1VS53A012103775
JS1VS53A112101274	JS1VS53A112101887	JS1VS53A112102618	JS1VS53A212103776
JS1VS53A312101275	JS1VS53A912102124	JS1VS53A312102619	JS1VS53A412103777
JS1VS53A512101276	JS1VS53A012102125	JS1VS53AX12102620	JS1VS53A612103778
JS1VS53A712101277	JS1VS53A212102126	JS1VS53A112102621	JS1VS53A812103779
JS1VS53A912101278	JS1VS53A412102127	JS1VS53A312102622	JS1VS53A412103780
JS1VS53A012101279	JS1VS53A612102128	JS1VS53A512102623	JS1VS53A612103781
JS1VS53A712101280	JS1VS53A812102129	JS1VS53A712102624	JS1VS53A812103782
JS1VS53A912101281	JS1VS53A412102130	JS1VS53A912102625	JS1VS53AX12103783
JS1VS53A012101282	JS1VS53A612102131	JS1VS53A012102626	JS1VS53A112103784
JS1VS53A212101283	JS1VS53A812102132	JS1VS53A212102627	JS1VS53A312103785
JS1VS53A412101284	JS1VS53AX12102133	JS1VS53A412102628	JS1VS53A512103786
JS1VS53A612101285	JS1VS53A612102579	JS1VS53A612102629	JS1VS53A712103787
JS1VS53A812101286	JS1VS53A212102580	JS1VS53A212102630	JS1VS53A912103788
JS1VS53AX12101287	JS1VS53A412102581	JS1VS53A412102631	JS1VS53A012103789
JS1VS53A112101288	JS1VS53A612102582	JS1VS53A612102632	JS1VS53A712103790
JS1VS53A312101289	JS1VS53A812102583	JS1VS53A812102633	JS1VS53A912103791
JS1VS53AX12101290	JS1VS53AX12102584	JS1VS53AX12102634	JS1VS53A012103792
JS1VS53A112101291	JS1VS53A112102585	JS1VS53A112102635	JS1VS53A212103793
JS1VS53A312101292	JS1VS53A312102586	JS1VS53A312102636	JS1VS53A412103794
JS1VS53A512101293	JS1VS53A512102587	JS1VS53A512102637	JS1VS53A612103795
JS1VS53A712101294	JS1VS53A712102588	JS1VS53A712102638	JS1VS53A812103796
JS1VS53A412101544	JS1VS53A912102589	JS1VS53A912102639	JS1VS53A512104467
JS1VS53A612101545	JS1VS53A512102590	JS1VS53A512102640	JS1VS53A712104468
JS1VS53A812101546	JS1VS53A712102591	JS1VS53A712102641	JS1VS53A912104469
JS1VS53AX12101547	JS1VS53A912102592	JS1VS53A912102642	JS1VS53A512104470
JS1VS53A112101548	JS1VS53A012102593	JS1VS53A012102643	JS1VS53A712104471
JS1VS53A312101549	JS1VS53A212102594	JS1VS53A212102644	JS1VS53A912104472
JS1VS53AX12101550	JS1VS53A412102595	JS1VS53A412102645	JS1VS53A012104473
JS1VS53A112101551	JS1VS53A612102596	JS1VS53A612102646	JS1VS53A212104474
JS1VS53A312101552	JS1VS53A812102597	JS1VS53A812102647	JS1VS53A412104475
JS1VS53A512101553	JS1VS53AX12102598	JS1VS53AX12102648	JS1VS53A612104476

1999 - 2004 California-specification VZ800

VIN	VIN	VIN	VIN
JS1VS53A812104477	JS1VS53A712104860	JS1VS53A522101117	JS1VS53A022102854
JS1VS53AX12104478	JS1VS53A912104861	JS1VS53A722101118	JS1VS53A222102855
JS1VS53A112104479	JS1VS53A012104862	JS1VS53A922101119	JS1VS53A422102856
JS1VS53A812104480	JS1VS53A212104863	JS1VS53A522101120	JS1VS53A622102857
JS1VS53AX12104481	JS1VS53A412104864	JS1VS53A722101121	JS1VS53A822102858
JS1VS53A112104482	JS1VS53A612104865	JS1VS53A922101122	JS1VS53AX22102859
JS1VS53A312104483	JS1VS53A812104866	JS1VS53A022101123	JS1VS53A622102860
JS1VS53A512104484	JS1VS53AX12104867	JS1VS53A222101124	JS1VS53A822102861
JS1VS53A712104485	JS1VS53A112104868	JS1VS53A422101125	JS1VS53AX22102862
JS1VS53A912104486	JS1VS53A312104869	JS1VS53A622101126	JS1VS53A122102863
JS1VS53A012104487	JS1VS53AX12104870	JS1VS53A922102027	JS1VS53A422103229
JS1VS53A212104488	JS1VS53A112104871	JS1VS53A022102028	JS1VS53A022103230
JS1VS53A412104489	JS1VS53A312104872	JS1VS53A222102029	JS1VS53A222103231
JS1VS53A012104490	JS1VS53A512104873	JS1VS53A922102030	JS1VS53A422103232
JS1VS53A212104491	JS1VS53A712104874	JS1VS53A022102031	JS1VS53A822103329
JS1VS53A412104492	JS1VS53A912104875	JS1VS53A222102032	JS1VS53A422103330
JS1VS53A612104493	JS1VS53A012104876	JS1VS53A422102033	JS1VS53A622103331
JS1VS53A812104494	JS1VS53A212104877	JS1VS53A622102034	JS1VS53A822103332
JS1VS53AX12104495	JS1VS53A412104878	JS1VS53A822102035	JS1VS53AX22103333
JS1VS53A112104496	JS1VS53A612104879	JS1VS53AX22102036	JS1VS53A122103334
JS1VS53A312104497	JS1VS53A422100783	JS1VS53A122102037	JS1VS53A322103335
JS1VS53A512104498	JS1VS53A622100784	JS1VS53A322102038	JS1VS53A522103336
JS1VS53A712104499	JS1VS53A822100785	JS1VS53A522102039	JS1VS53A722103337
JS1VS53AX12104500	JS1VS53AX22100786	JS1VS53A122102040	JS1VS53A922103338
JS1VS53A112104501	JS1VS53A122100787	JS1VS53A322102041	JS1VS53A022103339
JS1VS53A312104502	JS1VS53A322100788	JS1VS53A522102042	JS1VS53AX32100529
JS1VS53A512104503	JS1VS53A522100789	JS1VS53A722102043	JS1VS53A632100530
JS1VS53A712104504	JS1VS53A122100790	JS1VS53A922102044	JS1VS53A832100531
JS1VS53A912104505	JS1VS53A322100791	JS1VS53A022102045	JS1VS53AX32100532
JS1VS53A012104506	JS1VS53A522100792	JS1VS53A222102046	JS1VS53A132100533
JS1VS53A912104648	JS1VS53A722100793	JS1VS53A422102047	JS1VS53A332100534
JS1VS53A012104649	JS1VS53A922100794	JS1VS53A622102048	JS1VS53A532100535
JS1VS53A712104650	JS1VS53A022100795	JS1VS53A822102049	JS1VS53A732100536
JS1VS53A912104651	JS1VS53A222100796	JS1VS53A422102050	JS1VS53A932100537
JS1VS53A012104652	JS1VS53A422100797	JS1VS53A622102051	JS1VS53A032100538
JS1VS53A212104653	JS1VS53A622100798	JS1VS53A822102052	JS1VS53A232100539
JS1VS53A412104654	JS1VS53A822100799	JS1VS53AX22102053	JS1VS53A932100540
JS1VS53A612104655	JS1VS53A022100800	JS1VS53A122102054	JS1VS53A032100541
JS1VS53A812104656	JS1VS53A222100801	JS1VS53A322102055	JS1VS53A232100542
JS1VS53AX12104657	JS1VS53A422100802	JS1VS53A522102056	JS1VS53A432100543
JS1VS53A112104658	JS1VS53A222101107	JS1VS53A722102057	JS1VS53A632100544
JS1VS53A312104659	JS1VS53A422101108	JS1VS53A922102058	JS1VS53A832100545
JS1VS53AX12104660	JS1VS53A622101109	JS1VS53A022102059	JS1VS53AX32100546
JS1VS53A112104661	JS1VS53A222101110	JS1VS53A722102060	JS1VS53A132100547
JS1VS53A312104662	JS1VS53A422101111	JS1VS53A922102061	JS1VS53A332100548
JS1VS53A312104855	JS1VS53A622101112	JS1VS53A022102062	JS1VS53A532100549
JS1VS53A512104856	JS1VS53A822101113	JS1VS53A222102063	JS1VS53A132100550
JS1VS53A712104857	JS1VS53AX22101114	JS1VS53A422102064	JS1VS53A332100551
JS1VS53A912104858	JS1VS53A122101115	JS1VS53A622102065	JS1VS53A532100552
JS1VS53A012104859	JS1VS53A322101116	JS1VS53A822102066	JS1VS53A732100553

1999 - 2004 California-specification VZ800

VIN	VIN	VIN	VIN
JS1VS53A932100554	JS1VS53A732102030	JS1VS53A642100951	JS1VS53A4X2101164
JS1VS53A032100555	JS1VS53A532102074	JS1VS53A2X2101115	JS1VS53A6X2101165
JS1VS53A232100556	JS1VS53A732102075	JS1VS53A4X2101116	JS1VS53A8X2101166
JS1VS53A432100557	JS1VS53A932102076	JS1VS53A6X2101117	JS1VS53AXX2101167
JS1VS53A632100558	JS1VS53A032102077	JS1VS53A8X2101118	JS1VS53A1X2101168
JS1VS53A832100559	JS1VS53A232102078	JS1VS53AXX2101119	JS1VS53A3X2101169
JS1VS53A432100560	JS1VS53A432102079	JS1VS53A6X2101120	JS1VS53AXX2101170
JS1VS53A632100561	JS1VS53A032102080	JS1VS53A8X2101121	JS1VS53A1X2101171
JS1VS53A832100562	JS1VS53A232102081	JS1VS53AXX2101122	JS1VS53A3X2101172
JS1VS53AX32100563	JS1VS53A432102082	JS1VS53A1X2101123	JS1VS53A5X2101173
JS1VS53A132100564	JS1VS53A632102083	JS1VS53A3X2101124	JS1VS53A7X2101174
JS1VS53A332100565	JS1VS53A832102084	JS1VS53A5X2101125	JS1VS53A9X2101175
JS1VS53A532100566	JS1VS53AX32102085	JS1VS53A7X2101126	JS1VS53A0X2101176
JS1VS53A732100567	JS1VS53A132102086	JS1VS53A9X2101127	JS1VS53A2X2101177
JS1VS53A932100568	JS1VS53A332102087	JS1VS53A0X2101128	JS1VS53A4X2101178
JS1VS53A132101021	JS1VS53A532102088	JS1VS53A2X2101129	JS1VS53A6X2101179
JS1VS53A332101022	JS1VS53A732102089	JS1VS53A9X2101130	JS1VS53A2X2101180
JS1VS53A532101023	JS1VS53A332102090	JS1VS53A0X2101131	JS1VS53A4X2101181
JS1VS53A732101024	JS1VS53A532102091	JS1VS53A2X2101132	JS1VS53A6X2101182
JS1VS53A932101025	JS1VS53A732102092	JS1VS53A4X2101133	JS1VS53A8X2101183
JS1VS53A032101026	JS1VS53A932102093	JS1VS53A6X2101134	JS1VS53AXX2101184
JS1VS53A232101027	JS1VS53A242100610	JS1VS53A8X2101135	JS1VS53A1X2101185
JS1VS53A432101028	JS1VS53A442100611	JS1VS53AXX2101136	JS1VS53A3X2101186
JS1VS53A632101029	JS1VS53A642100612	JS1VS53A1X2101137	JS1VS53A5X2101187
JS1VS53A232101030	JS1VS53A842100613	JS1VS53A3X2101138	JS1VS53A7X2101188
JS1VS53A432101031	JS1VS53AX42100614	JS1VS53A5X2101139	JS1VS53A9X2101189
JS1VS53A632101032	JS1VS53A142100615	JS1VS53A1X2101140	JS1VS53A5X2101190
JS1VS53A832101033	JS1VS53A342100616	JS1VS53A3X2101141	JS1VS53A7X2101191
JS1VS53AX32101034	JS1VS53A542100617	JS1VS53A5X2101142	JS1VS53A9X2101192
JS1VS53A132101035	JS1VS53A742100618	JS1VS53A7X2101143	JS1VS53A0X2101193
JS1VS53A332101036	JS1VS53A942100619	JS1VS53A9X2101144	JS1VS53A2X2101194
JS1VS53A532101037	JS1VS53A542100620	JS1VS53A0X2101145	JS1VS53A4X2101195
JS1VS53A732101038	JS1VS53A742100621	JS1VS53A2X2101146	JS1VS53A6X2101196
JS1VS53A932101039	JS1VS53A942100622	JS1VS53A4X2101147	JS1VS53A8X2101197
JS1VS53A532101040	JS1VS53A042100623	JS1VS53A6X2101148	JS1VS53AXX2101198
JS1VS53A932102014	JS1VS53A242100624	JS1VS53A8X2101149	JS1VS53A1X2101199
JS1VS53A032102015	JS1VS53A442100625	JS1VS53A4X2101150	JS1VS53A4X2101200
JS1VS53A232102016	JS1VS53A642100626	JS1VS53A6X2101151	JS1VS53A6X2101201
JS1VS53A432102017	JS1VS53A842100627	JS1VS53A8X2101152	JS1VS53A8X2101202
JS1VS53A632102018	JS1VS53AX42100628	JS1VS53AXX2101153	JS1VS53AXX2101203
JS1VS53A832102019	JS1VS53A142100629	JS1VS53A1X2101154	JS1VS53A1X2101204
JS1VS53A432102020	JS1VS53A542100942	JS1VS53A3X2101155	JS1VS53A1X2102658
JS1VS53A632102021	JS1VS53A742100943	JS1VS53A5X2101156	JS1VS53A3X2102659
JS1VS53AX32102023	JS1VS53A942100944	JS1VS53A7X2101157	JS1VS53AXX2102660
JS1VS53A132102024	JS1VS53A042100945	JS1VS53A9X2101158	JS1VS53A1X2102661
JS1VS53A332102025	JS1VS53A242100946	JS1VS53A0X2101159	JS1VS53A3X2102662
JS1VS53A532102026	JS1VS53A442100947	JS1VS53A7X2101160	JS1VS53A5X2102663
JS1VS53A732102027	JS1VS53A642100948	JS1VS53A9X2101161	JS1VS53A7X2102664
JS1VS53A932102028	JS1VS53A842100949	JS1VS53A0X2101162	JS1VS53A9X2102665
JS1VS53A032102029	JS1VS53A442100950	JS1VS53A2X2101163	JS1VS53A0X2102666

1999 - 2004 California-specification VZ800

VIN	VIN	VIN	VIN
JS1VS53A2X2102667	JS1VS53A1X2103034	JS1VS53A2Y2101181	JS1VS53A6Y2101863
JS1VS53A4X2102668	JS1VS53A3X2103035	JS1VS53A4Y2101182	JS1VS53A8Y2101864
JS1VS53A6X2102669	JS1VS53A5X2103036	JS1VS53A6Y2101183	JS1VS53AXY2101865
JS1VS53A2X2102670	JS1VS53A7X2103037	JS1VS53A8Y2101184	JS1VS53A1Y2101866
JS1VS53A4X2102671	JS1VS53A9X2103038	JS1VS53AXY2101185	JS1VS53A3Y2101867
JS1VS53A6X2102672	JS1VS53A0X2103039	JS1VS53A1Y2101186	JS1VS53A5Y2101868
JS1VS53A8X2102673	JS1VS53A7X2103040	JS1VS53A3Y2101187	JS1VS53A7Y2101869
JS1VS53AXX2102674	JS1VS53A9X2103041	JS1VS53A5Y2101188	JS1VS53A3Y2101870
JS1VS53A1X2102675	JS1VS53A0X2103042	JS1VS53A7Y2101189	JS1VS53A5Y2102261
JS1VS53A3X2102676	JS1VS53A2X2103043	JS1VS53A3Y2101190	JS1VS53A7Y2102262
JS1VS53A5X2102677	JS1VS53A4X2103044	JS1VS53A5Y2101191	JS1VS53A9Y2102263
JS1VS53A7X2102678	JS1VS53A2X2103513	JS1VS53A7Y2101192	JS1VS53A0Y2102264
JS1VS53A9X2102679	JS1VS53A4X2103514	JS1VS53A9Y2101193	JS1VS53A2Y2102265
JS1VS53A5X2102680	JS1VS53A6X2103515	JS1VS53A0Y2101194	JS1VS53A4Y2102266
JS1VS53A7X2102681	JS1VS53A8X2103516	JS1VS53A2Y2101195	JS1VS53A6Y2102267
JS1VS53A9X2102682	JS1VS53AXX2103517	JS1VS53A4Y2101196	JS1VS53A8Y2102268
JS1VS53A0X2102683	JS1VS53A1X2103518	JS1VS53A6Y2101197	JS1VS53AXY2102269
JS1VS53A2X2102684	JS1VS53A3X2103519	JS1VS53A8Y2101198	JS1VS53A6Y2102270
JS1VS53A4X2102685	JS1VS53AXX2103520	JS1VS53AXY2101199	JS1VS53A8Y2102271
JS1VS53A6X2102686	JS1VS53A1X2103521	JS1VS53A2Y2101200	JS1VS53AXY2102272
JS1VS53A8X2102687	JS1VS53A3X2103522	JS1VS53A4Y2101201	JS1VS53A1Y2102273
JS1VS53AXX2102688	JS1VS53A3X2103746	JS1VS53A6Y2101202	JS1VS53A3Y2102274
JS1VS53A1X2102689	JS1VS53A5X2103747	JS1VS53A8Y2101203	JS1VS53A5Y2102275
JS1VS53A8X2102690	JS1VS53A7X2103748	JS1VS53AXY2101204	JS1VS53A7Y2102276
JS1VS53AXX2102691	JS1VS53A9X2103749	JS1VS53A1Y2101205	JS1VS53A9Y2102277
JS1VS53A1X2102692	JS1VS53A5X2103750	JS1VS53A3Y2101206	JS1VS53A0Y2102278
JS1VS53A3X2102693	JS1VS53A5Y2101157	JS1VS53A9Y2101761	JS1VS53A2Y2102279
JS1VS53A5X2102694	JS1VS53A7Y2101158	JS1VS53A0Y2101762	JS1VS53A9Y2102280
JS1VS53A7X2102695	JS1VS53A9Y2101159	JS1VS53A2Y2101763	JS1VS53A5Y2102681
JS1VS53A9X2102696	JS1VS53A5Y2101160	JS1VS53A4Y2101764	JS1VS53A7Y2102682
JS1VS53A0X2102697	JS1VS53A7Y2101161	JS1VS53A6Y2101765	JS1VS53A9Y2102683
JS1VS53A2X2102698	JS1VS53A9Y2101162	JS1VS53A8Y2101766	JS1VS53A0Y2102684
JS1VS53A4X2102699	JS1VS53A0Y2101163	JS1VS53AXY2101767	JS1VS53A2Y2102685
JS1VS53A7X2102700	JS1VS53A2Y2101164	JS1VS53A1Y2101768	JS1VS53A4Y2102686
JS1VS53A9X2102701	JS1VS53A4Y2101165	JS1VS53A3Y2101769	JS1VS53A6Y2102687
JS1VS53A0X2102702	JS1VS53A6Y2101166	JS1VS53AXY2101770	JS1VS53A8Y2102688
JS1VS53A2X2102703	JS1VS53A8Y2101167	JS1VS53A1Y2101771	JS1VS53AXY2102689
JS1VS53A4X2102704	JS1VS53AXY2101168	JS1VS53A3Y2101772	JS1VS53A6Y2102690
JS1VS53A6X2102705	JS1VS53A1Y2101169	JS1VS53A5Y2101773	JS1VS53A8Y2102691
JS1VS53A8X2102706	JS1VS53A8Y2101170	JS1VS53A7Y2101774	JS1VS53AXY2102692
JS1VS53AXX2102707	JS1VS53AXY2101171	JS1VS53A9Y2101775	JS1VS53A1Y2102693
JS1VS53A0X2103025	JS1VS53A1Y2101172	JS1VS53A0Y2101776	JS1VS53A3Y2102694
JS1VS53A2X2103026	JS1VS53A3Y2101173	JS1VS53A2Y2101777	JS1VS53A5Y2102695
JS1VS53A4X2103027	JS1VS53A5Y2101174	JS1VS53A4Y2101778	JS1VS53A7Y2102696
JS1VS53A6X2103028	JS1VS53A7Y2101175	JS1VS53A6Y2101779	JS1VS53A9Y2102697
JS1VS53A8X2103029	JS1VS53A9Y2101176	JS1VS53A2Y2101780	JS1VS53A0Y2102698
JS1VS53A4X2103030	JS1VS53A0Y2101177	JS1VS53A4Y2101859	JS1VS53A2Y2102699
JS1VS53A6X2103031	JS1VS53A2Y2101178	JS1VS53A0Y2101860	JS1VS53A5Y2102700
JS1VS53A8X2103032	JS1VS53A4Y2101179	JS1VS53A2Y2101861	JS1VS53A5Y2103121
JS1VS53AXX2103033	JS1VS53A0Y2101180	JS1VS53A4Y2101862	JS1VS53A7Y2103122

1999 - 2004 California-specification VZ800

VIN	VIN	VIN	VIN
JS1VS53A9Y2103123			
JS1VS53A0Y2103124			
JS1VS53A2Y2103125			
JS1VS53A4Y2103126			
JS1VS53A6Y2103127			
JS1VS53A8Y2103128			
JS1VS53AXY2103129			
JS1VS53A6Y2103130			
JS1VS53A8Y2103131			
JS1VS53AXY2103132			
JS1VS53A1Y2103133			
JS1VS53A3Y2103134			
JS1VS53A5Y2103135			
JS1VS53A7Y2103136			
JS1VS53A9Y2103137			
JS1VS53A0Y2103138			
JS1VS53A2Y2103139			
JS1VS53A9Y2103140			
JS1VS53A9Y2103543			
JS1VS53A0Y2103544			
JS1VS53A2Y2103545			
JS1VS53A4Y2103546			
JS1VS53A6Y2103547			
JS1VS53A8Y2103548			
JS1VS53AXY2103549			
JS1VS53A6Y2103550			
JS1VS53A8Y2103551			
JS1VS53AXY2103552			
JS1VS53A1Y2103553			
JS1VS53A3Y2103554			
JS1VS53A5Y2103555			
JS1VS53A7Y2103556			
JS1VS53A9Y2103557			
JS1VS53A0Y2103558			
JS1VS53A2Y2103559			
JS1VS53A9Y2103560			
JS1VS53A0Y2103561			
JS1VS53A2Y2103562			
JS1VS53A4Y2103563			
JS1VS53A6Y2103564			
JS1VS53A8Y2103565			
JS1VS53AXY2103566			
JS1VS53A1Y2103567			
JS1VS53A3Y2103568			
JS1VS53A5Y2103569			
JS1VS53A1Y2103570			
JS1VS53A3Y2103571			
JS1VS53A5Y2103572			
JS1VS53A4Y2104454			