CERTAIN 1998-2003 MODEL YEAR WINDSTAR VEHICLES OPERATED IN CORROSION STATES – REAR AXLE INSPECTION AND REPAIR

OVERVIEW

In some of the affected vehicles, the rear axle could potentially fracture when operated in high corrosion areas (where salt is used on the roadways during winter months) for an extended period of time. If the rear axle should completely fracture, vehicle handling may be affected which could increase the risk of a crash.

Dealers are to clean and inspect the rear axle beam for cracks or perforations (holes). Based on the results of the inspection and the availability of axle reinforcement parts, dealers will perform one of the following service actions:

- **Rear Axle Beam PASSED the Inspection and Parts ARE Available:** Install the parts per Attachment III – Technical Information and return the vehicle to the owner.

  PLEASE NOTE: In order for the bracket to properly bond to the rear axle, the vehicle **must remain** on the hoist until the axle reinforcement adhesive has cured. The following guidelines **must** be followed:

  - **2 hour cure time at 21°C (70° F) or higher shop temperature**
  - **3 hour and 15 minute cure time at 16°C (60° F) shop temperature**
  - **If the shop temperature is lower than 16°C (60° F), the adhesive will need to cure overnight**
  - **DO NOT USE HEAT LAMPS TO REDUCE CURE TIME AS EXCESSIVE TEMPERATURES WILL AFFECT BOND STRENGTH OF THE ADHESIVE**

  We recommend dealers schedule late afternoon repairs if hoist availability will be a concern. By installing the brackets at the end of the day, dealers will have the flexibility to allow the adhesive to properly cure overnight while the vehicle is on the hoist. Customers are eligible for a rental vehicle if needed. Refer to "Rental Vehicles" in Attachment I.

- **Rear Axle Beam PASSED the Inspection and Parts ARE NOT Available:** *Apply urethane foam and Anti-Corrosion Coating.* Return the vehicle to the owner along with the Passed Rear Axle Inspection Customer Information Sheet.

- **Rear Axle Beam DID NOT PASS the Inspection:**

  - ***1998-2000 Model Year Vehicles:*** *Offer the customer rental transportation and if the date is on or before 12/30/2010, contact the Special Service Support Center (SSSC) as soon as possible at 1-800-325-5621 to discuss potential RAV offer.*

  - **2001-2003 Model Year Vehicles:** Offer the customer rental transportation and provide them with a copy of the Did Not Pass Rear Axle Inspection Customer Information Sheet.

CPR © 2010 FORD MOTOR COMPANY
DEARBORN, MICHIGAN 48121
12/2010

TABLE OF CONTENTS

NEW! **REPAIR FLOWCHART ..... Page 3**

REAR AXLE BEAM CLEANING ..... Page 4
Axle Reinforcement Parts NOT Available ..... Page 4
Axle Reinforcement Parts ARE Available ..... Page 5

NEW! **REAR AXLE BEAM INSPECTION *AND URETHANE FOAM APPLICATION* ..... *Page 6***

AXLE REINFORCEMENT BRACKET INSTALLATION ..... Page 10
NEW! *Important Repair Information ..... Page 10*
NEW! *Applying Urethane Foam ..... Page 12*
Cleaning Rear Axle Beam and Brackets ..... Page 12
NEW! *Preparing Adhesive Cartridge ..... Page 14*
Applying Adhesive ..... Page 15
NEW! *Installing Axle Reinforcement Brackets ..... Page 16*
Adhesive Cure Time ..... Page 18

REAR AXLE REPLACEMENT ..... Page 19
Removal ..... Page 19
Installation ..... Page 24

CPR © 2010 FORD MOTOR COMPANY
DEARBORN, MICHIGAN 48121
12/2010

NEW! REPAIR FLOWCHART

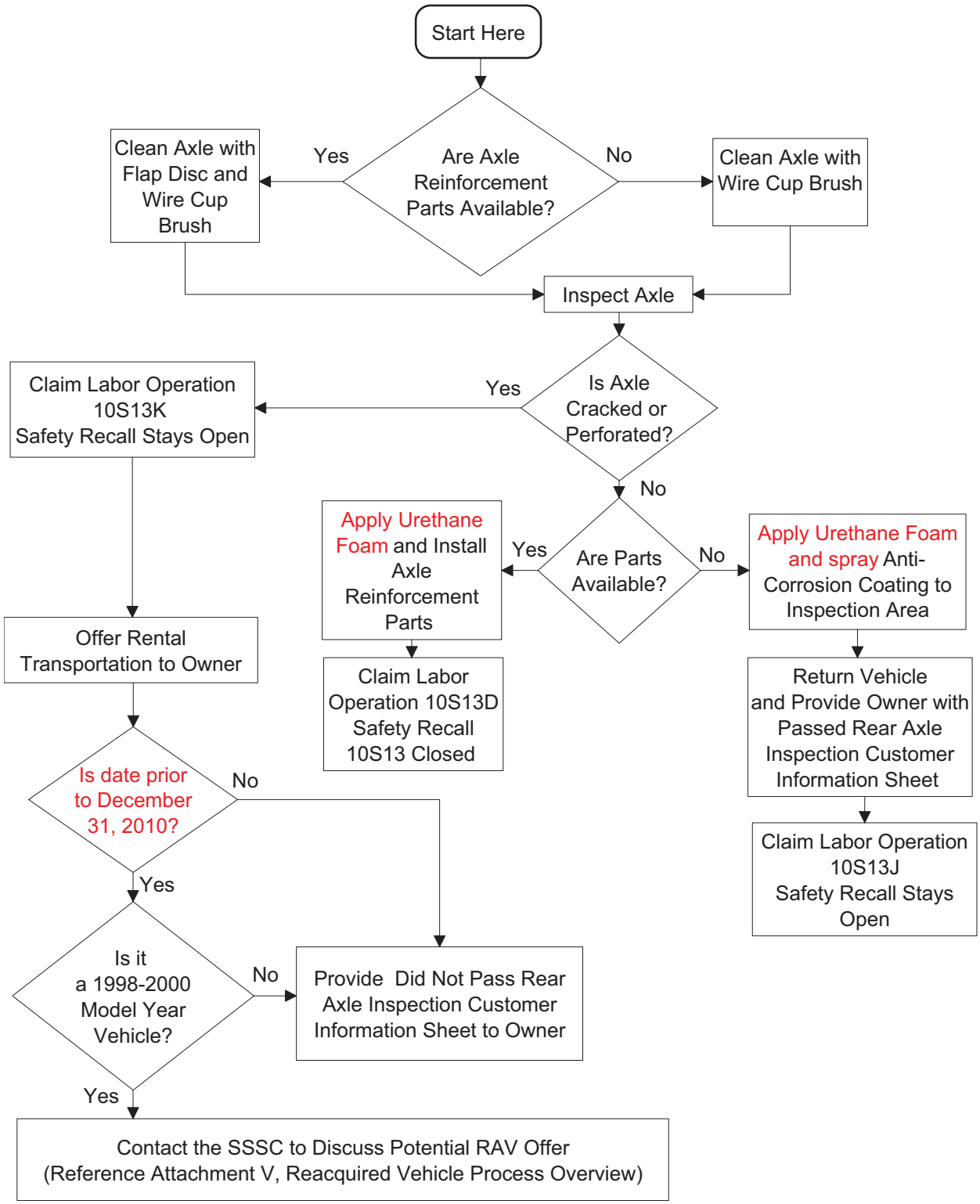

CPR © 2010 FORD MOTOR COMPANY
DEARBORN, MICHIGAN 48121
12/2010

REAR AXLE BEAM CLEANING

Axle Reinforcement Parts NOT Available

1. With the gear selector in NEUTRAL, position the vehicle on a hoist and lift the vehicle. For additional information, refer to the WSM, Section 100-02.
2. Measure and mark the areas located 127 mm (5 in) to 229 mm (9 in) inboard of the axle welds. See Figure 1.

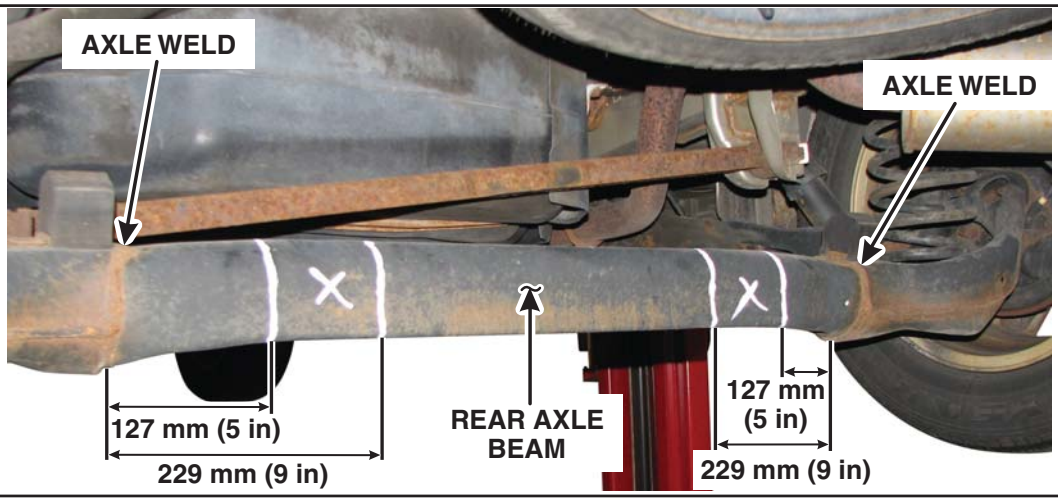

FIGURE 1

CAUTION: Wear safety glasses and proper body protection while grinding or using any chemicals.

3. **NOTE:** It is very important to clean the front, rear and inside surfaces of the rear axle beam in the marked areas to expose bare metal without reducing metal thickness.

   Using a knot wire cup brush approximately 25 mm (1 in) in diameter, clean the rear axle beam in the marked areas. See Figure 2.

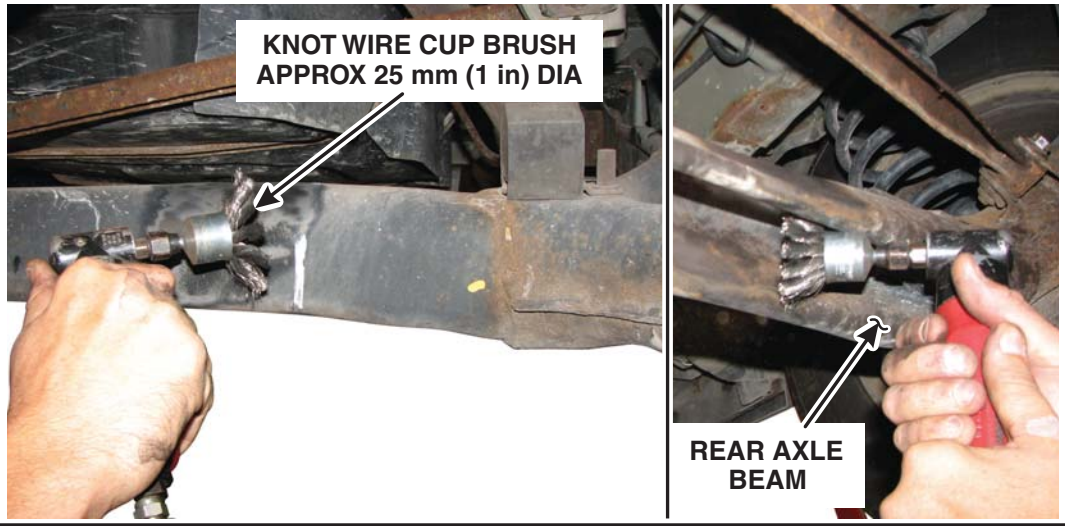

FIGURE 2

4. Proceed to rear axle beam inspection *and urethane foam application* on page 6.

CPR © 2010 FORD MOTOR COMPANY
DEARBORN, MICHIGAN 48121
12/2010

REAR AXLE BEAM CLEANING

Axle Reinforcement Parts ARE Available

1. With the gear selector in NEUTRAL, position the vehicle on a hoist and lift the vehicle. For additional information, refer to the WSM, Section 100-02.
2. Measure and mark the areas located 127 mm (5 in) to 229 mm (9 in) inboard of the axle welds. See Figure 1.

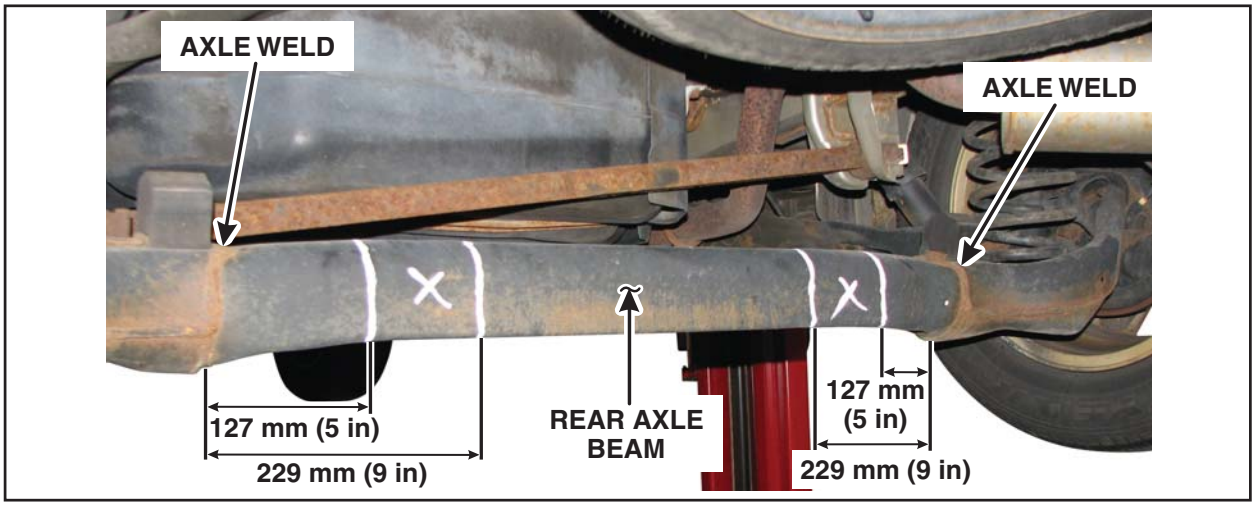

FIGURE 1

CAUTION: Wear safety glasses and proper body protection while grinding or using any chemicals.

3. **NOTE:** It is very important to clean the front, rear and inside surfaces of the rear axle beam in the marked areas to expose bare metal without reducing metal thickness.

   Using a 36z to 40z flap disc or equivalent, clean the outside surfaces of the rear axle in the marked areas. Remove all E-coat and rust. See Figure 2A. Using a knot wire cup brush approximately 25 mm (1 in) in diameter, clean the inside of the rear axle beam in the marked areas. See Figure 2B.

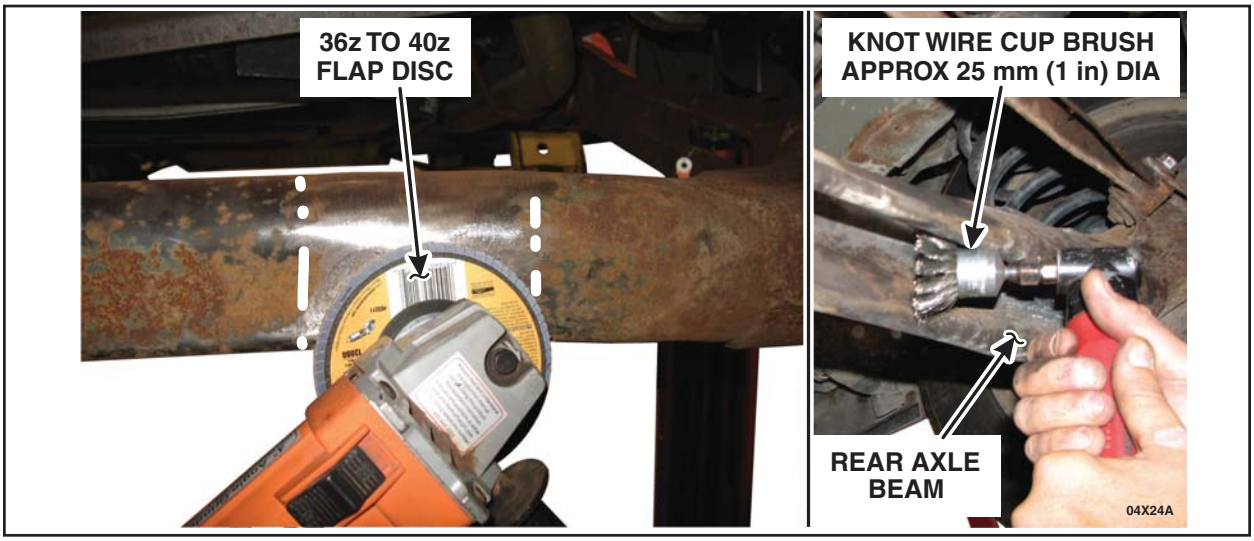

FIGURE 2A **FIGURE 2B**

4. Proceed to rear axle beam inspection *and urethane foam application* on page 6.

CPR © 2010 FORD MOTOR COMPANY
DEARBORN, MICHIGAN 48121
12/2010

NEW! REAR AXLE BEAM INSPECTION *AND URETHANE FOAM APPLICATION*

1. Visually inspect the entire rear axle beam for cracks or perforations (holes). See Figures 1 and 2.

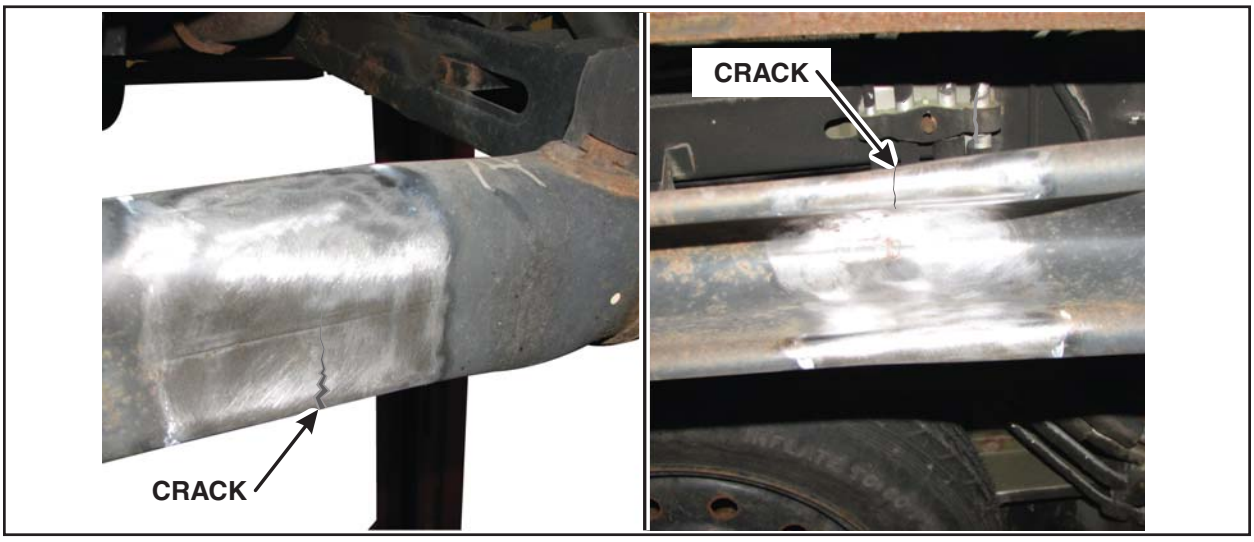

FIGURE 1

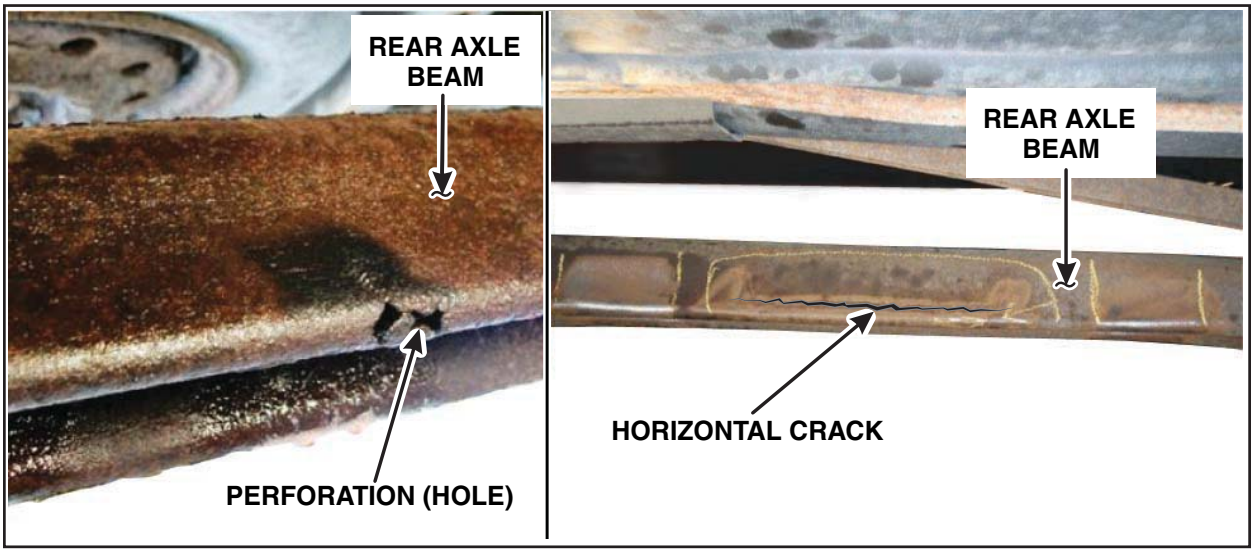

FIGURE 2

CPR © 2010 FORD MOTOR COMPANY
DEARBORN, MICHIGAN 48121
12/2010

2. **NOTE:** Vertical tool marks are possible anywhere along the bottom edge of the rear axle beam.

   NOTE: The manufacturing fixture tool marks are present on every rear axle beam.

   When inspecting the rear axle beam, please be aware that surface marks, tool marks, or coating imperfections are acceptable. See Figures 3 and 4.

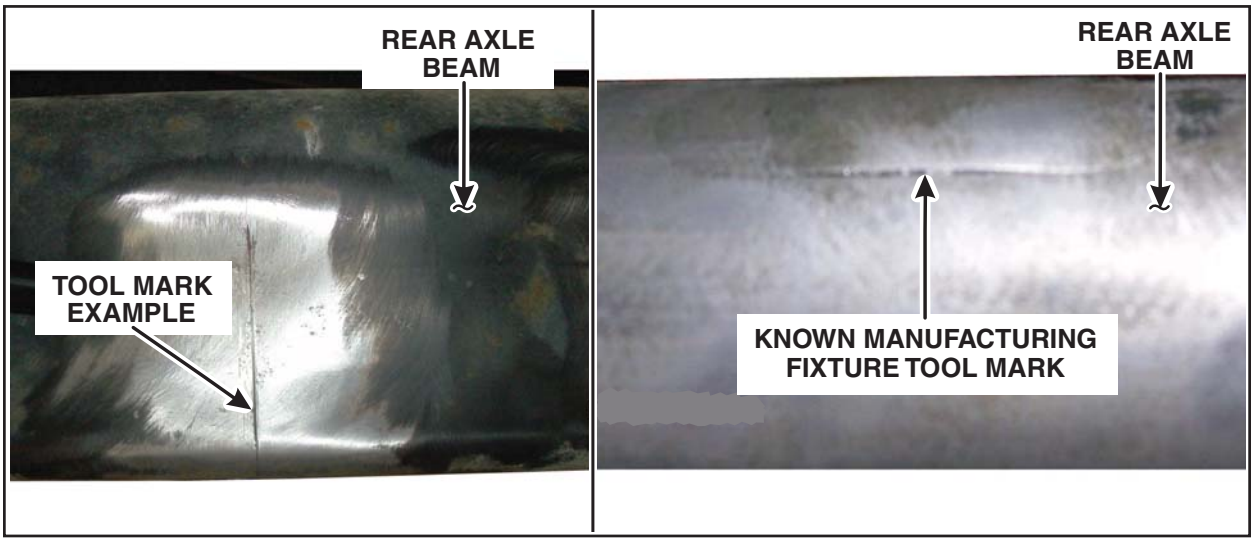

FIGURE 3

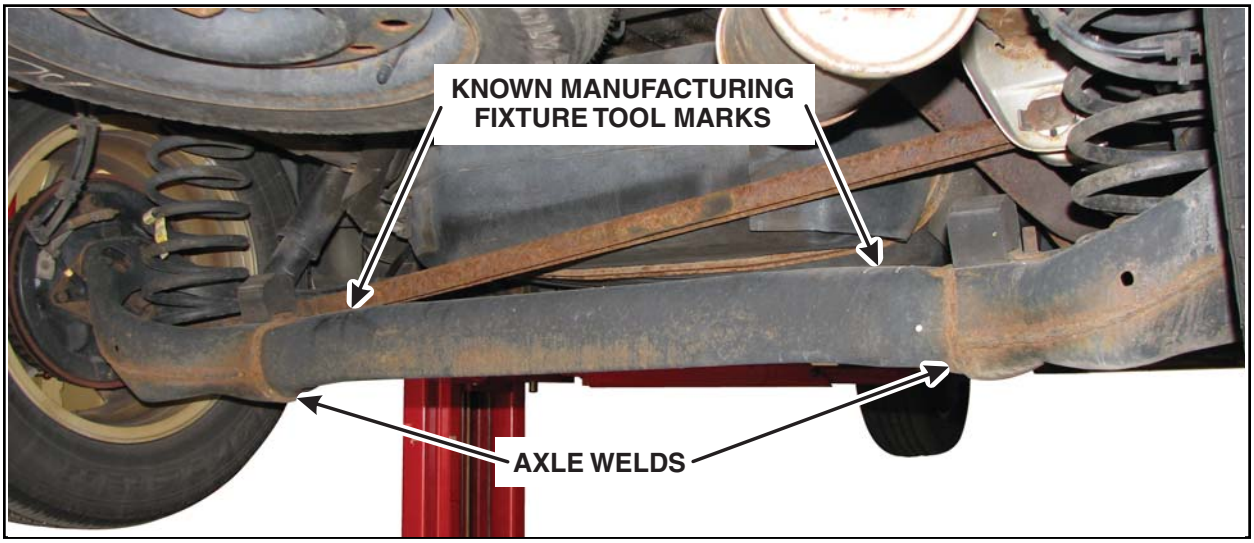

FIGURE 4

CPR © 2010 FORD MOTOR COMPANY
DEARBORN, MICHIGAN 48121
12/2010

3. Rear axle beam inspection results:

   a. If cracks or perforations (holes) are found, offer the owner rental transportation. Please advise a service management team member that the axle was cracked so they can handle appropriately.

   b. If no cracks or perforations (holes) are found and axle reinforcement parts are available, proceed to axle reinforcement bracket installation on page 10.

NEW! c. *If no cracks or perforations (holes) are found and axle reinforcement parts are not available:*

   1. *Using a hammer, tap on each end of the axle around the entire circumference between the axle weld and spring pocket to loosen rust scale and debris.*

   2. *Using an air gun, remove loose debris from inside the axle.*

   CAUTION: Wear safety glasses and proper body protection while grinding or using any chemicals.

   3. *Obtain one (1) can of Great Stuff™ Gaps & Cracks. Follow the instructions on the can for application. Insert nozzle in tooling hole at bottom of spring seat as far as possible. Pull trigger and remove nozzle in circular pattern. Stop application about 25 mm (1 in) from tooling hole. See Figure 5.*

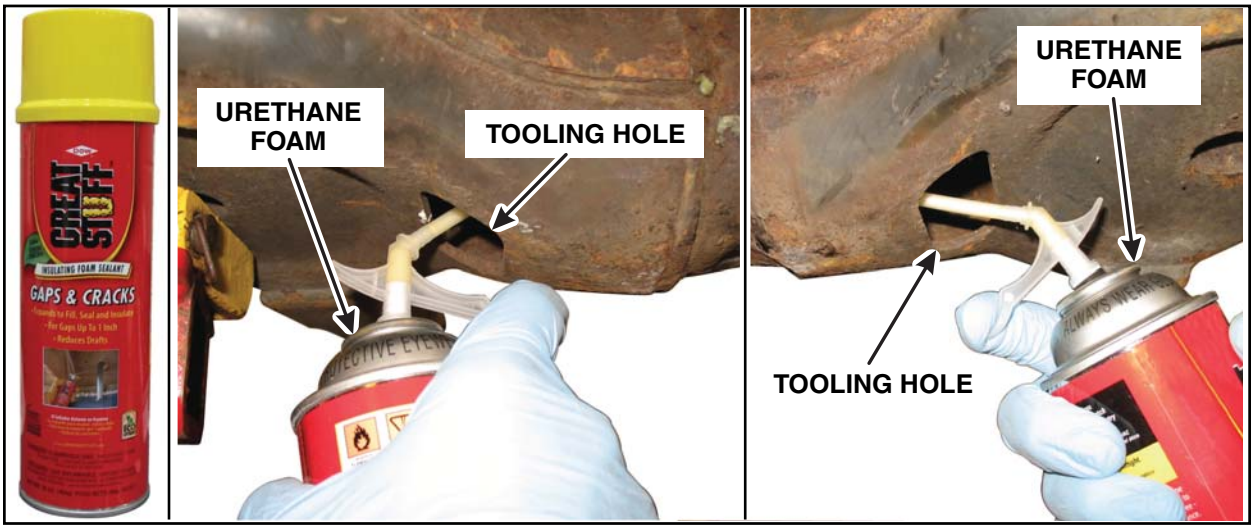

FIGURE 5

   4. *Obtain one (1) can of PM-13-A Anti-Corrosion Coating and a Preval® sprayer.*

   5. *Vigorously shake the can of PM-13-A Anti-Corrosion Coating.*

   6. ***NOTE:*** *Do not shake the Preval® sprayer once fluid has been added to the container.*

   Pour 59mL (2oz) of PM-13-A Anti-Corrosion Coating into the Preval® container.

CPR © 2010 FORD MOTOR COMPANY
DEARBORN, MICHIGAN 48121
12/2010

7. ***NOTE:*** *Observe all warnings and cautions included with the Preval® sprayer.*

   Spray PM-13-A Anti-Corrosion Coating on the inspection area ensuring all bare metal is coated. [Apply 29mL (1oz) of PM-13-A Anti-Corrosion Coating on each side.] See Figure 6.

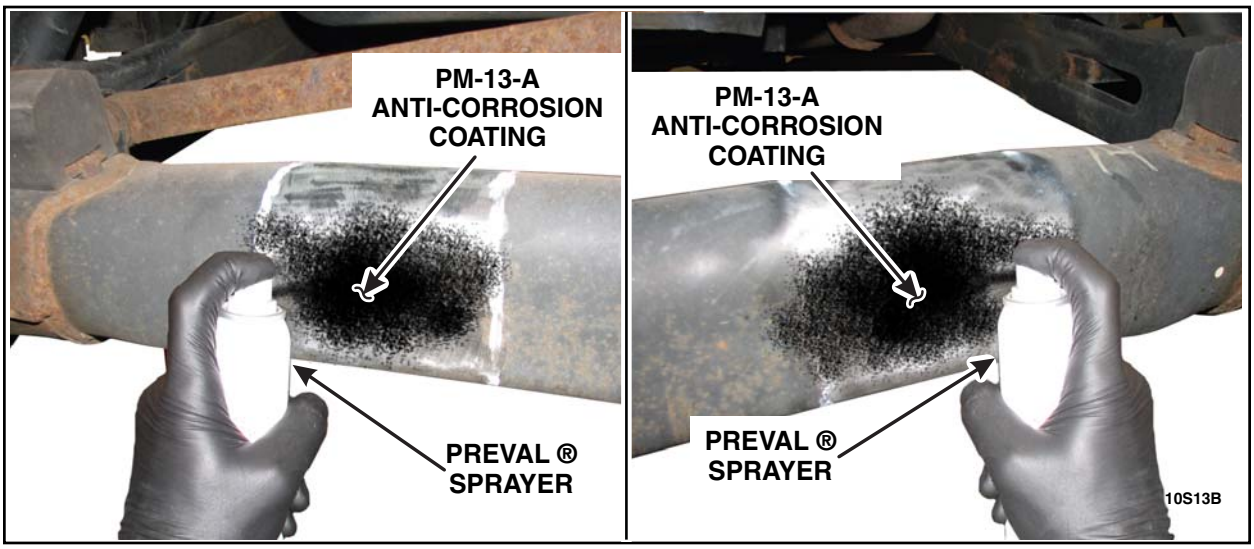

FIGURE 6

8. *Clean Preval® sprayer with brake cleaner and return the vehicle to the owner.*

CPR © 2010 FORD MOTOR COMPANY
DEARBORN, MICHIGAN 48121
12/2010

AXLE REINFORCEMENT BRACKET INSTALLATION

NEW! ***Important Repair Information***

Several of the specified chemical products applied to the reinforcement brackets require special handling as indicated on the product packaging. Please ensure your Parts and Service department personnel access the Material Safety Data Sheets for guidance, and take the necessary precautions.

Metal bonding adhesive is used to secure the reinforcement brackets to the axle. Please read ALL of the Important Repair Information steps below before attempting any repair.

1. The adhesive will only bond to clean, bare metal. When grinding the axle, all rust and E-coat must be removed. Metal should be shiny in appearance. Do not try to remove deep pits. This may affect the strength of the axle.

2. After grinding the axle, clean the axle and reinforcement brackets with Motorcraft® Metal Brake Parts Cleaner. Other brands of brake cleaner may leave a residue which could affect the bond strength of the adhesive.

3. The adhesive starts to cure as soon as it is mixed. For this reason, you should only apply the adhesive and install the brackets on one side of the axle at a time. Install a new mixing tip before applying adhesive to the second set of brackets.

4. When applying adhesive, spread it evenly over the reinforcement brackets and make sure there is enough applied to fill gaps between the bracket and axle. When applied correctly, there should be adhesive "squeeze out" from all edges of the bracket when the bolts are tightened.

5. Install the axle reinforcement bracket bolts with the head toward the front of the vehicle and the stud pointing away from the fuel tank.

6. After the bolts are tightened, use a brush to spread and smooth the adhesive. Make sure all gaps and voids are filled with adhesive.

7. Use only Motorcraft® PM-13-A for corrosion protection. Some corrosion protection chemicals and undercoating materials will prevent the adhesive from curing properly.

8. *Obtaining the proper adhesive cure is a critical part of the rear axle reinforcement repair. To ensure the adhesive cures properly, please review the following items:*

   - ***Cure Time and Hoist Availability:*** *In order for the bracket to properly bond to the rear axle, the vehicle must remain on the hoist until the adhesive used to install the axle reinforcement brackets has cured. The following guidelines* ***must*** *be followed:*
     - *2 hour cure time at 21° C (70° F) or higher shop temperature*
     - *3 hour and 15 minute cure time at 16° C (60° F) shop temperature*
     - *If the shop temperature is lower than 16° C (60° F), the adhesive will need to cure overnight*
     - ***DO NOT USE HEAT LAMPS TO REDUCE CURE TIME AS EXCESSIVE TEMPERATURES WILL AFFECT BOND STRENGTH OF THE ADHESIVE***

CPR © 2010 FORD MOTOR COMPANY
DEARBORN, MICHIGAN 48121
12/2010

- ***Cure Time and Axle Load:*** *The adhesive needs time to cure before load can be placed on the axle. If the weight of the vehicle is placed on the axle before the adhesive has fully cured, the axle may twist (as it is designed to do) and cause movement in the bonding area. If this movement occurs before the adhesive is fully cured, it may affect the strength of the axle reinforcement repair.*

- ***Adhesive Hardness and Anti-Corrosion Coating:*** *The consistency of fully cured Metal Bonding Adhesive will be hard but not brittle. It will be softer than body filler. By spraying Anti-Corrosion Coating over the adhesive immediately, the tacky surface is avoided.*

CPR © 2010 FORD MOTOR COMPANY
DEARBORN, MICHIGAN 48121
12/2010

CAUTION: Wear safety glasses and proper body protection while grinding or using any chemicals.

NEW! *Applying Urethane Foam*

1. *Check to see if urethane foam was previously applied. If urethane foam was already applied, go to step 5. If not, go to step 2.*
2. *Using a hammer, tap on each end of the axle around the entire circumference between the axle weld and spring pocket to loosen rust scale and debris.*
3. *Using an air gun, remove loose debris from inside the axle.*
4. *Obtain one (1) can of Great Stuff™ Gaps & Cracks. Follow the instructions on the can for application. Insert nozzle in tooling hole at bottom of spring seat as far as possible. Pull trigger and remove nozzle in circular pattern. Stop application about 25 mm (1 in) from tooling hole. See Figure 1.*

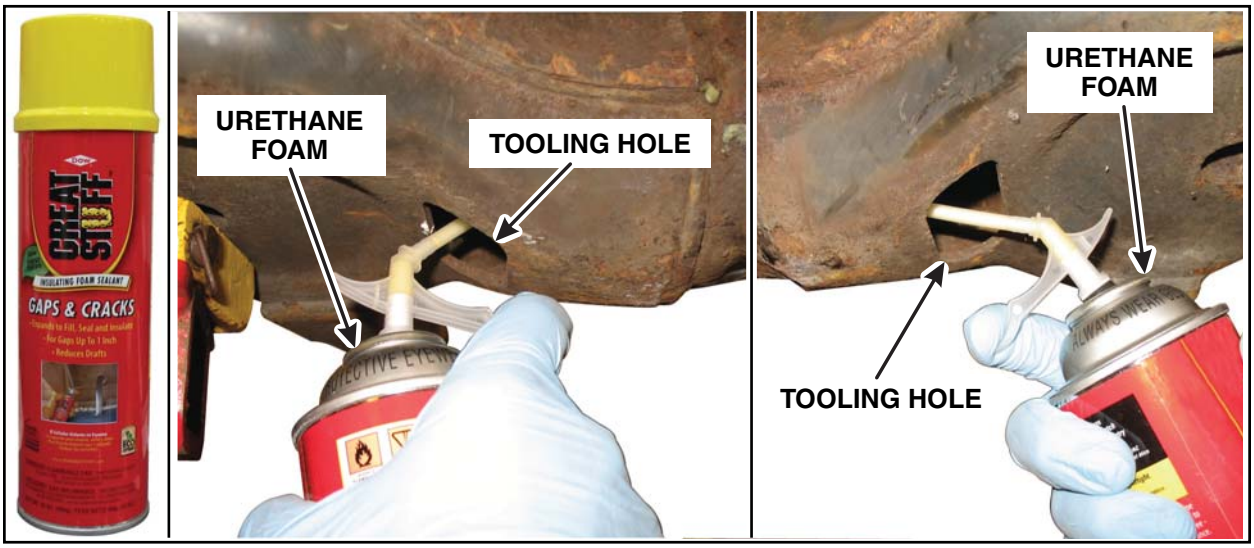

FIGURE 1

Cleaning Rear Axle Beam and Brackets

5. Brackets are stamped "LHFRT RHRR" and "LHRR RHFRT". Bracket A can be used on the Left-Hand Front or Right-Hand Rear of the axle. Bracket B can be used on the Left-Hand Rear or the Right-Hand Front of the axle. See Figure 2.

FIGURE 2

CPR © 2010 FORD MOTOR COMPANY
DEARBORN, MICHIGAN 48121
12/2010

6. Using a hammer, dry fit both sets of axle reinforcement brackets 13 mm (1/2 in) from the top of the axle weld. Using a paint pen or marker, outline the outer edges of the axle reinforcement brackets. See Figure 3.

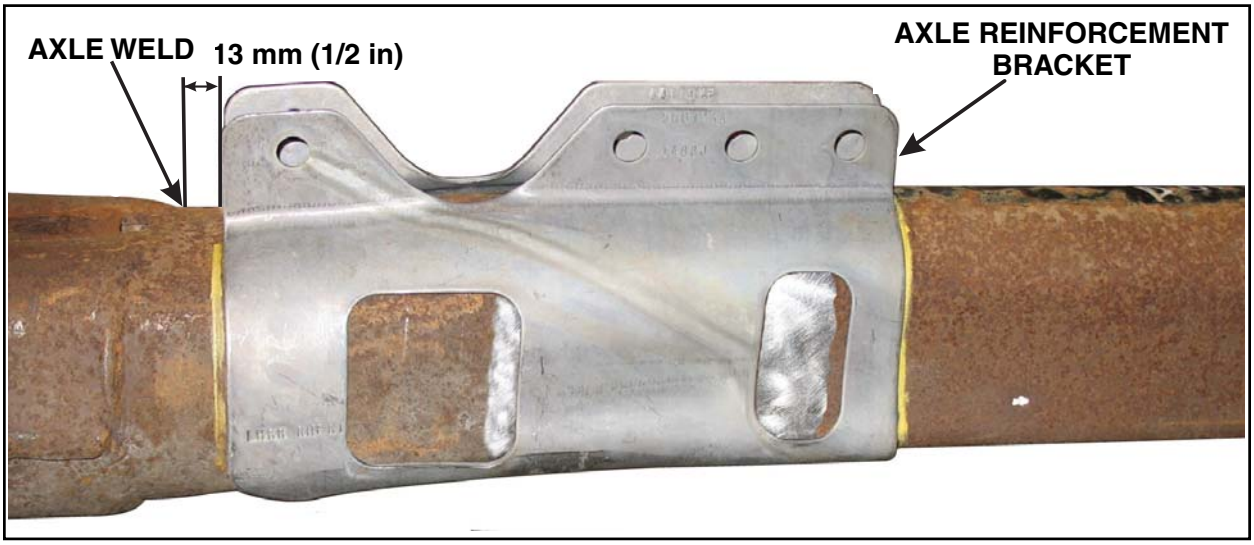

FIGURE 3

7. **NOTE:** Before removing the brackets, pull the top flange of both brackets backwards by hand (away from the axle) to slightly distort the bracket. This will allow the bracket to be installed without using a hammer.

   Remove the brackets.

8. Using a 36z to 40z flap disc or equivalent, grind the rear axle in the marked areas. Remove all E-coat and rust. Metal should be shiny in appearance. (Do not try to remove tool marks or marks caused by deep stone pecking or pitting.) See Figure 4.

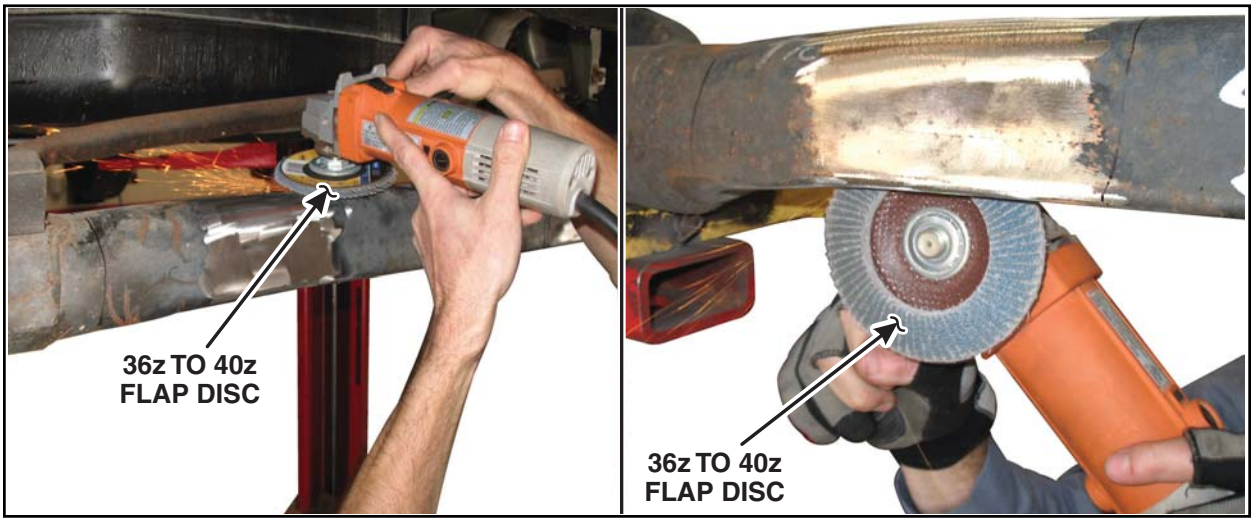

FIGURE 4

9. Wipe the axle reinforcement brackets and the ground surfaces of the axle with Motorcraft® Metal Brake Parts Cleaner using a clean paper towel.

CPR © 2010 FORD MOTOR COMPANY
DEARBORN, MICHIGAN 48121
12/2010

NEW! *Preparing Adhesive Cartridge*

NOTE: Position the applicator gun, adhesive cartridge, axle reinforcement brackets, bolts, nuts, channel lock pliers, impact wrench [with no more than 82 Nm (60 lb-ft) of torque], socket and wrench near the work area.

10. Prepare the applicator gun and adhesive cartridge for use.

    1. Make sure the 2:1 plunger is installed on the applicator gun with the arrows pointing toward each other.

    2. Remove the black retaining nut and nose plugs from the adhesive cartridge. Insert the adhesive cartridge into the applicator gun.

    3. Squeeze out a small amount of adhesive to ensure both sides of the adhesive cartridge are flowing equally. See Figure 5A.

    4. Attach the mixing tip and replace the black retaining nut. Dispense a mixing tip length of adhesive *onto a piece of scrap cardboard to ensure the product is evenly mixed and the color is consistent. The mixed adhesive should be grayish in color.* See Figure 5B.

    5. **NOTE:** The entire adhesive cartridge should be used to service one vehicle.

       Using a marker, make a mark on the adhesive cartridge ½ the distance from the plunger to the end of the adhesive cartridge tube. Then divide each section in ½ and mark once more. These marks divide the adhesive cartridge into four (4) equal parts for use on the four (4) brackets.

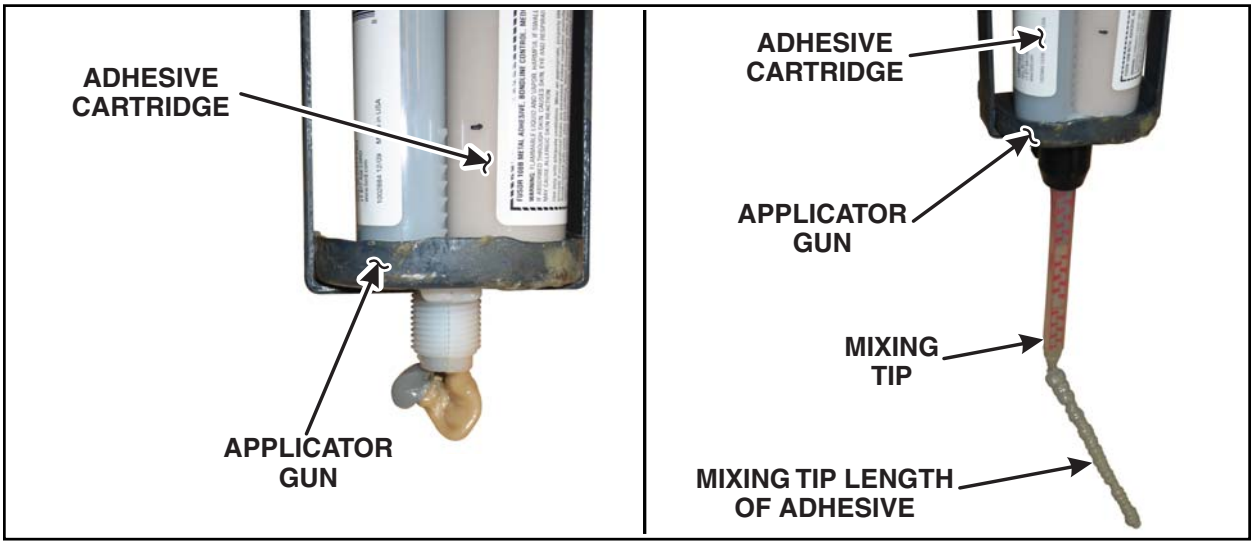

FIGURE 5A **FIGURE 5B**

CPR © 2010 FORD MOTOR COMPANY
DEARBORN, MICHIGAN 48121
12/2010

Applying Adhesive

11. **NOTE:** DO NOT ATTEMPT TO INSTALL BOTH AXLE REINFORCEMENT BRACKET SETS AT THE SAME TIME. Only install one set of axle reinforcement brackets (two mating brackets) at a time.

On the side of the axle that you are installing the first set of axle reinforcement brackets, apply a 10 mm (3/8 in) bead of adhesive along the top of the axle beam in the previously marked area. Spread the adhesive evenly with an acid brush. See Figure 6.

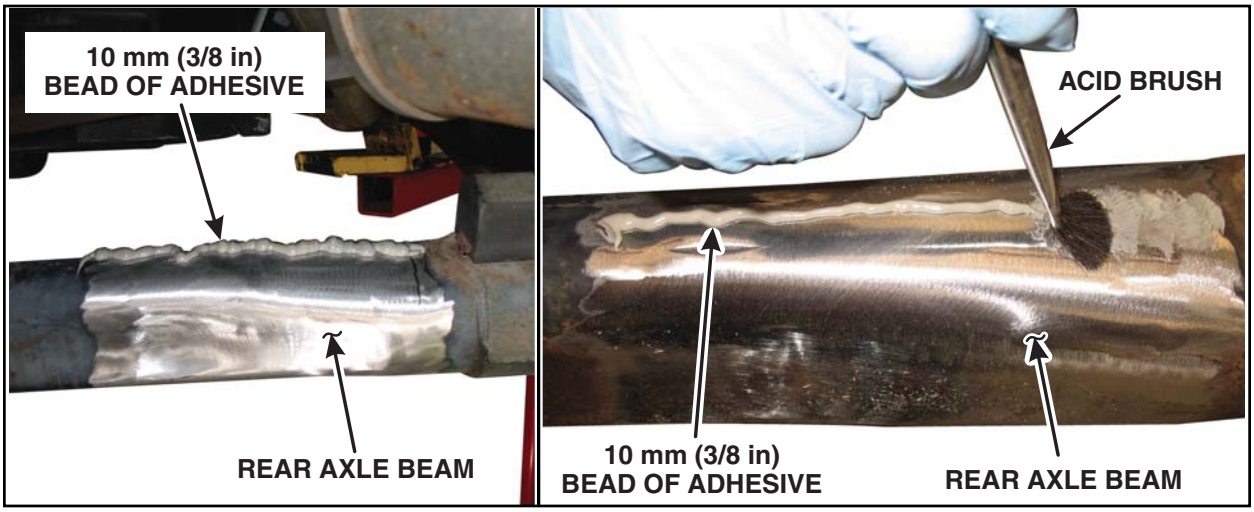

FIGURE 6

12. Using 10 mm (3/8 in) beads, dispense 1/4 of the adhesive cartridge onto each of two mating axle reinforcement brackets. Make sure to run a bead around the perimeter of each axle reinforcement bracket. Spread the adhesive evenly with an acid brush. See Figure 7.

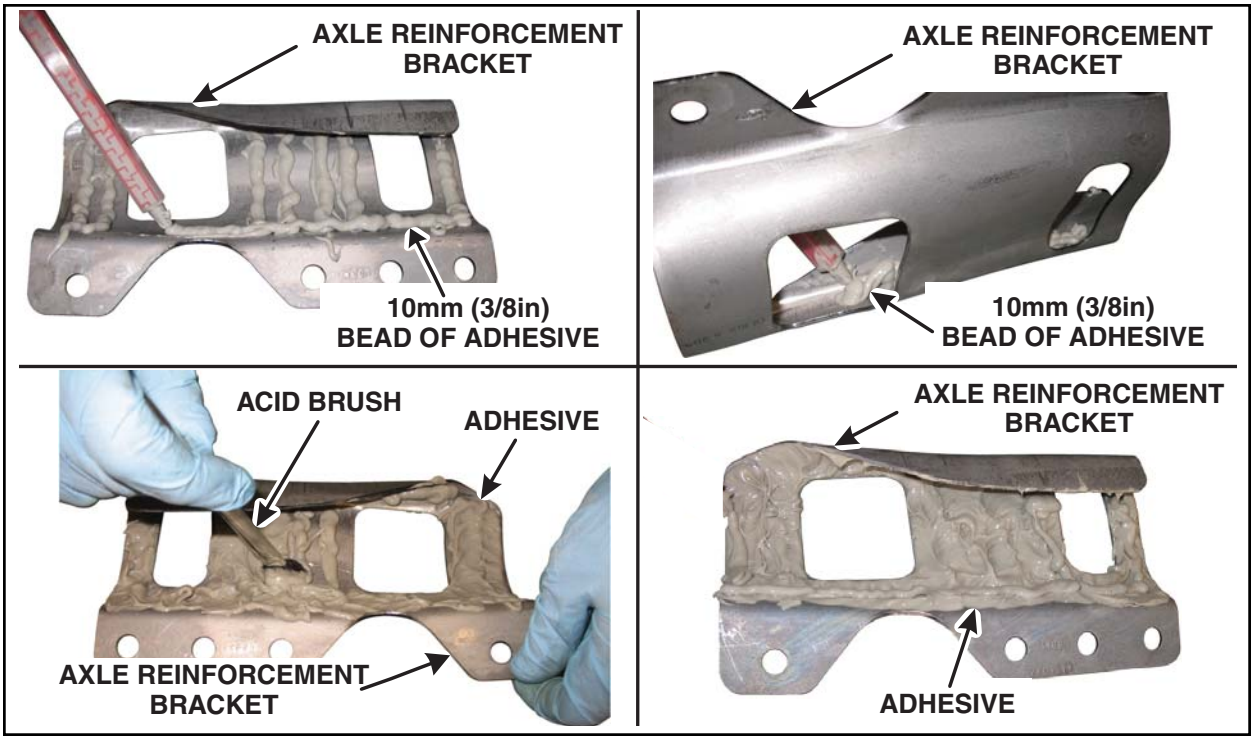

FIGURE 7

CPR © 2010 FORD MOTOR COMPANY
DEARBORN, MICHIGAN 48121
12/2010

NEW! *Installing Axle Reinforcement Brackets*

13. **NOTE:** If repositioning is necessary, use a small hammer to move the axle reinforcement bracket to the left or right while maintaining contact between the two surfaces. If the adhesive has turned a greenish color, it is too late to reposition the brackets.

Place the first axle reinforcement bracket onto the axle and align 13 mm (1/2 in) from the top of the axle weld. After the axle reinforcement bracket has been positioned, do not pull the axle reinforcement bracket away from the axle. See Figure 8.

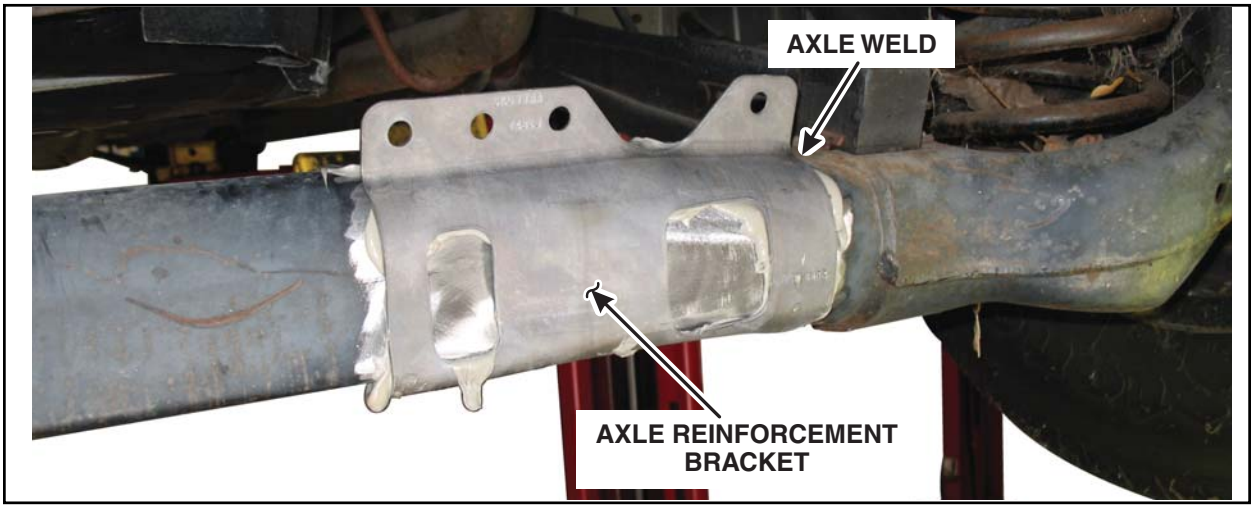

FIGURE 8

14. Place the mating axle reinforcement bracket opposite the first axle reinforcement bracket.

15. Pinch the axle reinforcement bracket flanges together and insert bolts from the front, pointing away from the fuel tank. Finger tighten nuts. See Figure 9.

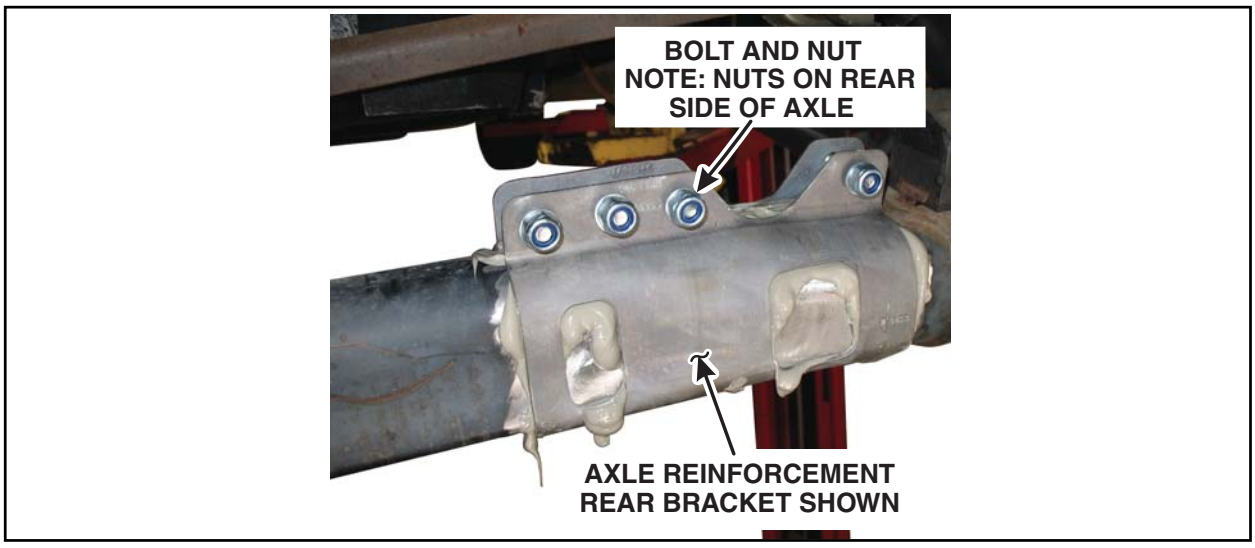

FIGURE 9

CPR © 2010 FORD MOTOR COMPANY
DEARBORN, MICHIGAN 48121
12/2010

16. Using an impact wrench with no more than 82 Nm (60 lb-ft) of torque, immediately tighten the nuts evenly on the axle reinforcement brackets. Tighten until the axle reinforcement bracket flanges are mated flush together.

17. Brush the squeezed out adhesive around all edges of the axle reinforcement brackets with an acid brush to ensure all openings are completely sealed. See Figure 10.

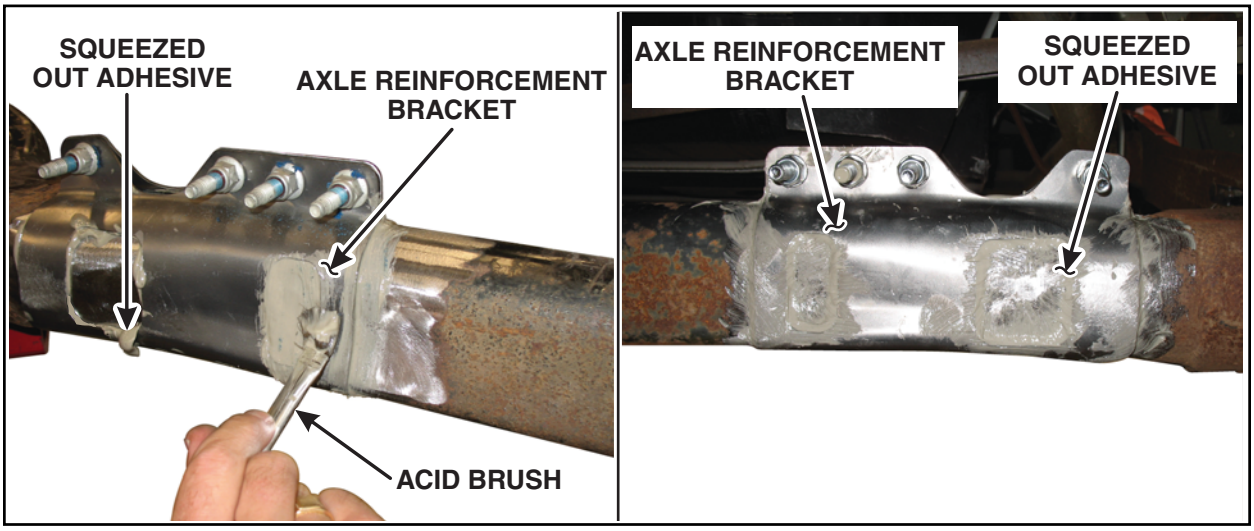

FIGURE 10

18. Install a new mixing tip on adhesive cartridge. *Dispense a mixing tip length of adhesive onto a piece of scrap cardboard to ensure the product is evenly mixed and the color is consistent. The mixed adhesive should be grayish in color.* Repeat steps 11 through 17 on the other end of the axle.

CPR © 2010 FORD MOTOR COMPANY
DEARBORN, MICHIGAN 48121
12/2010

NOTICE: Use only Motorcraft® PM-13-A Anti-Corrosion Coating for this repair. Other products may affect the cure time and strength of the adhesive and may not provide adequate corrosion protection.

19. Obtain one (1) can of PM-13-A Anti-Corrosion Coating and a Preval® sprayer.

20. Vigorously shake the can of PM-13-A Anti-Corrosion Coating.

*21. **NOTE:** Do not shake the Preval® sprayer once fluid has been added to the container .*

Pour 118mL (4oz) of PM-13-A Anti-Corrosion Coating into the Preval® container.

*22. **NOTE:** Observe all warnings and cautions included with the Preval® sprayer.*

While the adhesive is still "wet", spray PM-13-A Anti-Corrosion Coating on the brackets ensuring all bare metal and adhesive is coated. [Apply 59mL (2oz) of PM-13-A Anti-Corrosion Coating on each side.] See Figure 11.

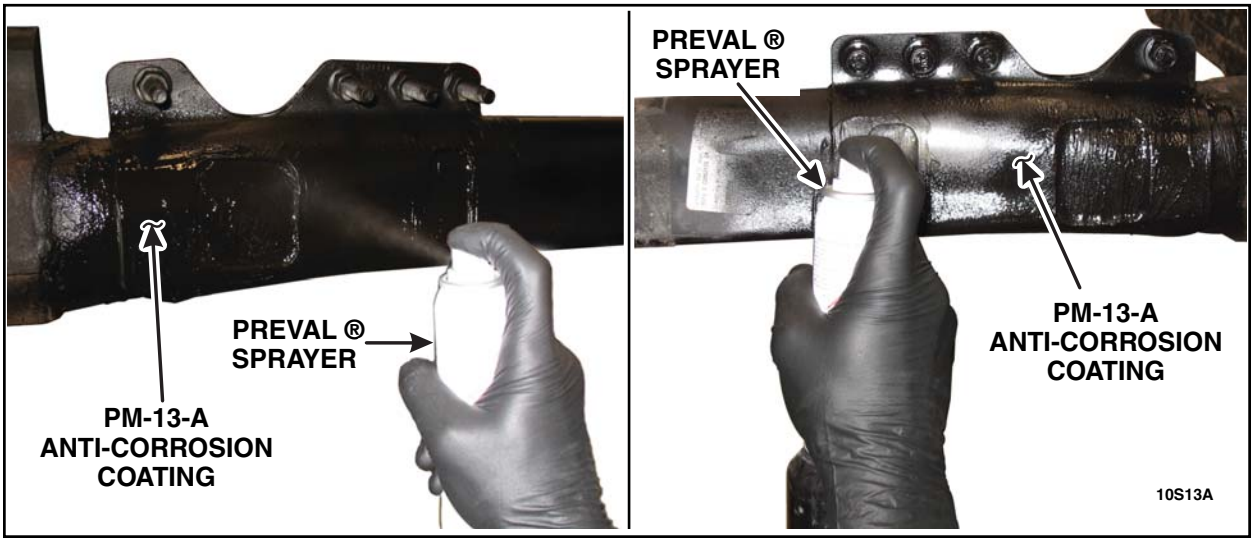

FIGURE 11

23. Clean Preval® sprayer with brake cleaner.

Adhesive Cure Time

24. **NOTICE: VEHICLE MUST REMAIN ON THE HOIST UNTIL THE ADHESIVE HAS CURED**

In order for the bracket to properly bond to the rear axle, the vehicle must remain on the hoist until the adhesive used to install the axle reinforcement brackets has cured. The following guidelines **must** be followed:

- 2 hour cure time at 21° C (70° F) or higher shop temperature
- 3 hour and 15 minute cure time at 16° C (60° F) shop temperature
- If the shop temperature is lower than 16° C (60° F), the adhesive will need to cure overnight
- **DO NOT USE HEAT LAMPS TO REDUCE CURE TIME AS EXCESSIVE TEMPERATURES WILL AFFECT BOND STRENGTH OF THE ADHESIVE**

25. Once the Anti-Corrosion Coating has been applied and adhesive has cured per the guidelines, return the vehicle to the customer.

CPR © 2010 FORD MOTOR COMPANY
DEARBORN, MICHIGAN 48121
12/2010

REAR AXLE REPLACEMENT

Removal

NOTICE: Suspension fasteners affect performance of vital components and systems. The failure of suspension fasteners can result in major service expense. If replacement is necessary, they must be replaced with the same part number, or an equivalent part. Do not use a replacement part of lesser quality or substitute design. Torque values must be used as specified during reassembly to ensure proper retention of these parts.

NOTE: The following rear axle replacement procedure is different than the procedure described in the Workshop Manual. The procedure was revised because the emergency brake cable and service brakes do not need to be disconnected in order to remove and replace the rear axle.

1. **NOTE:** To prevent the brake drum from sliding off the hub, reinstall one wheel nut on each hub.

   Remove both rear wheel and tire assemblies. For additional information, refer to the WSM, Section 204-04.

2. Remove the parking brake cable bracket nuts and position the parking brake cable brackets aside. See Figure 1.

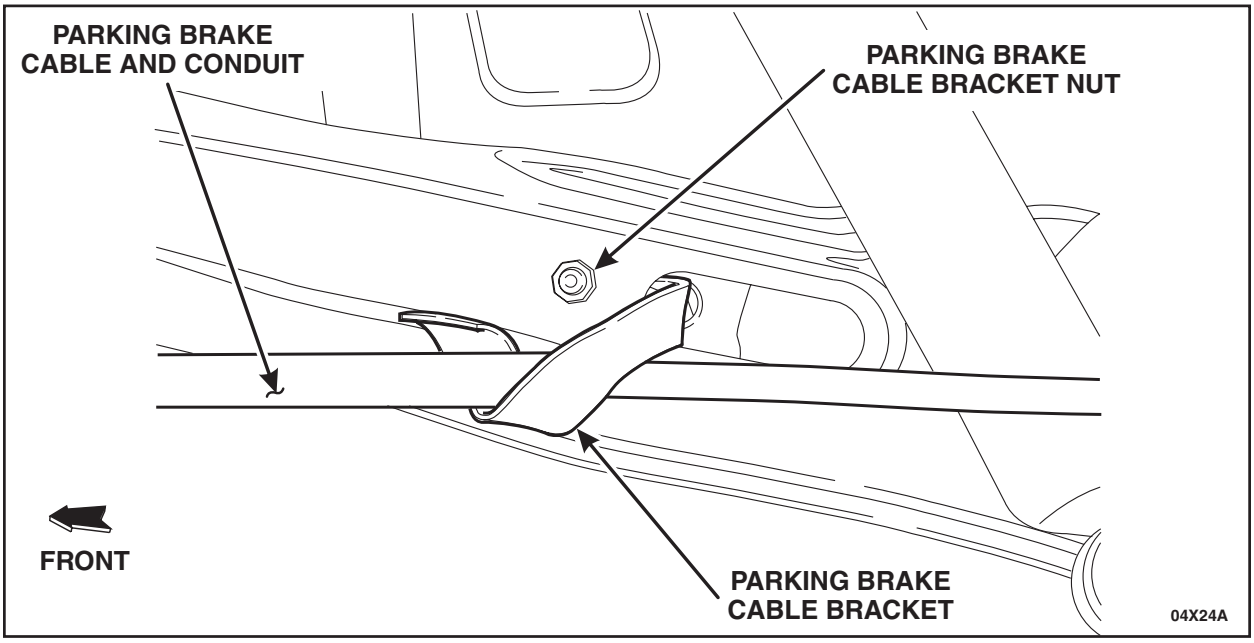

FIGURE 1

CPR © 2010 FORD MOTOR COMPANY
DEARBORN, MICHIGAN 48121
12/2010

3. Secure the rear axle to High Lift Transmission Jack 014-00942 or equivalent.

4. Disconnect the track bar from the rear axle. See Figure 2.
   - Remove the track bar bolt.
   - Remove the track bar from the rear axle track bar mounting bracket.
   - Remove the J-nut from the rear axle track bar mounting bracket. The bolt and J-nut will be reused on the ***new*** rear axle. If the bolt or J-nut has been damaged, replace as necessary.

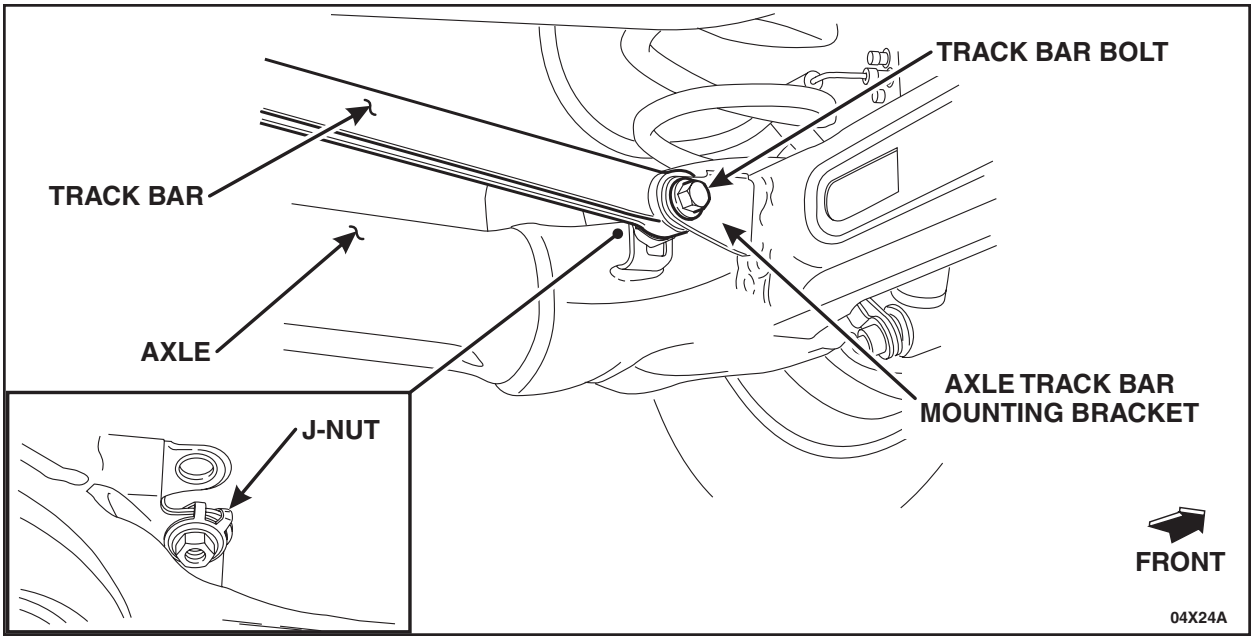

FIGURE 2

5. Remove the shock absorber lower bolts.

CPR © 2010 FORD MOTOR COMPANY
DEARBORN, MICHIGAN 48121
12/2010

6. **NOTE:** The spring insulators may come out with the spring when the spring is removed.

Carefully lower the rear axle assembly enough to remove the rear springs. See Figure 3.

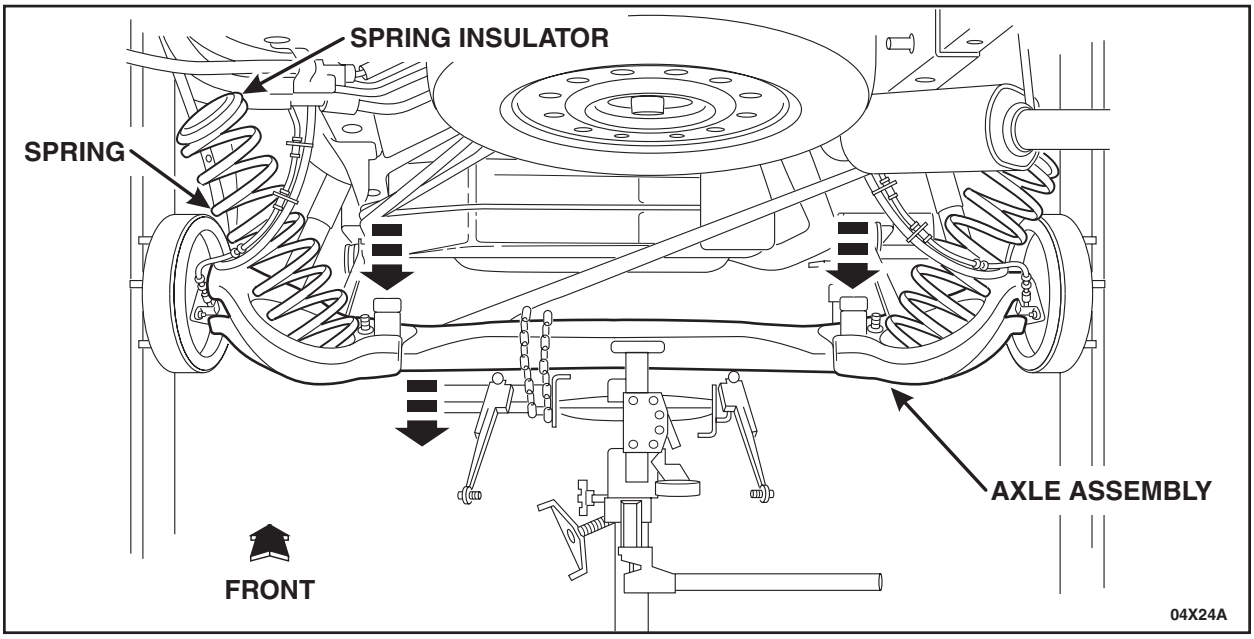

FIGURE 3

7. Remove the four spindle retaining nuts. See Figure 4.

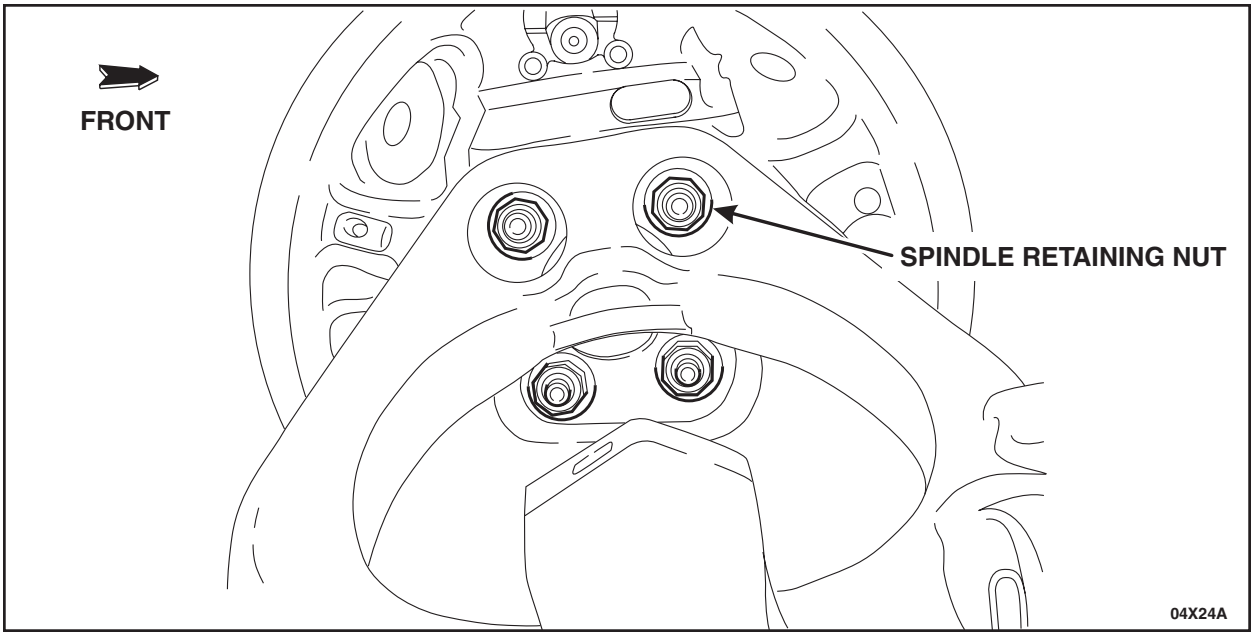

FIGURE 4

CPR © 2010 FORD MOTOR COMPANY
DEARBORN, MICHIGAN 48121
12/2010

8. **NOTICE: When removing the spindle, hub and brake assembly, never allow it to hang from the brake caliper flexible hose. To prevent damage to the flexible hose, provide suitable support.**

Position the spindle, hub and brake assemblies aside. See Figure 5.

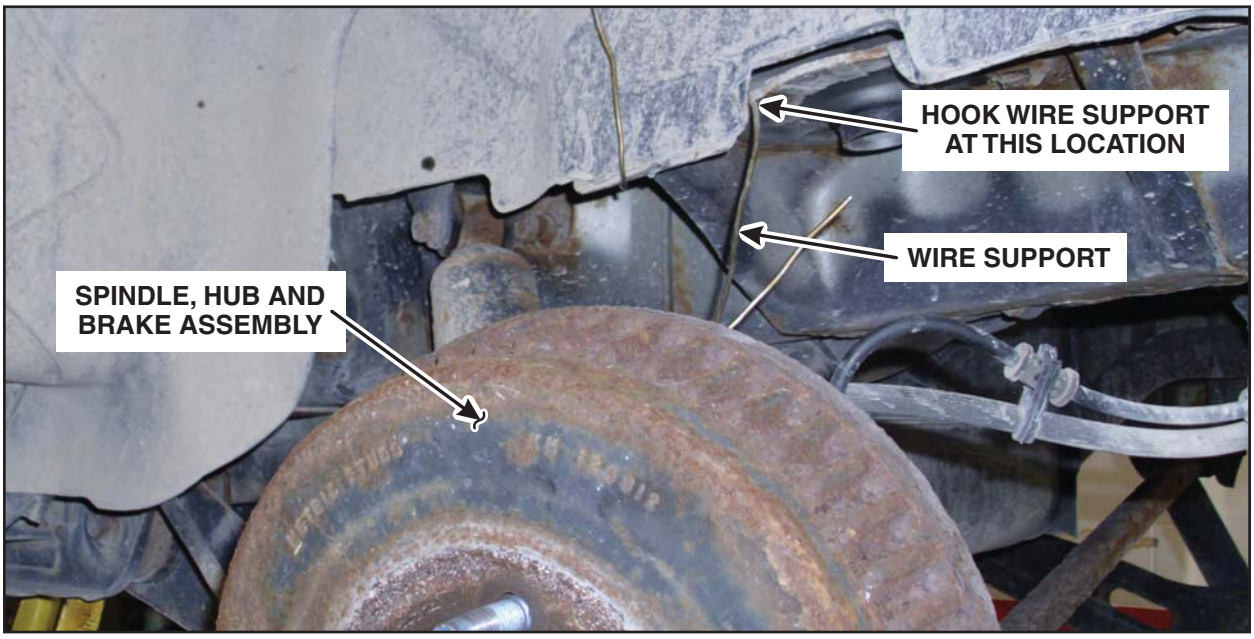

FIGURE 5

9. Remove the trailing arm-to-subframe bolts. See Figure 6.

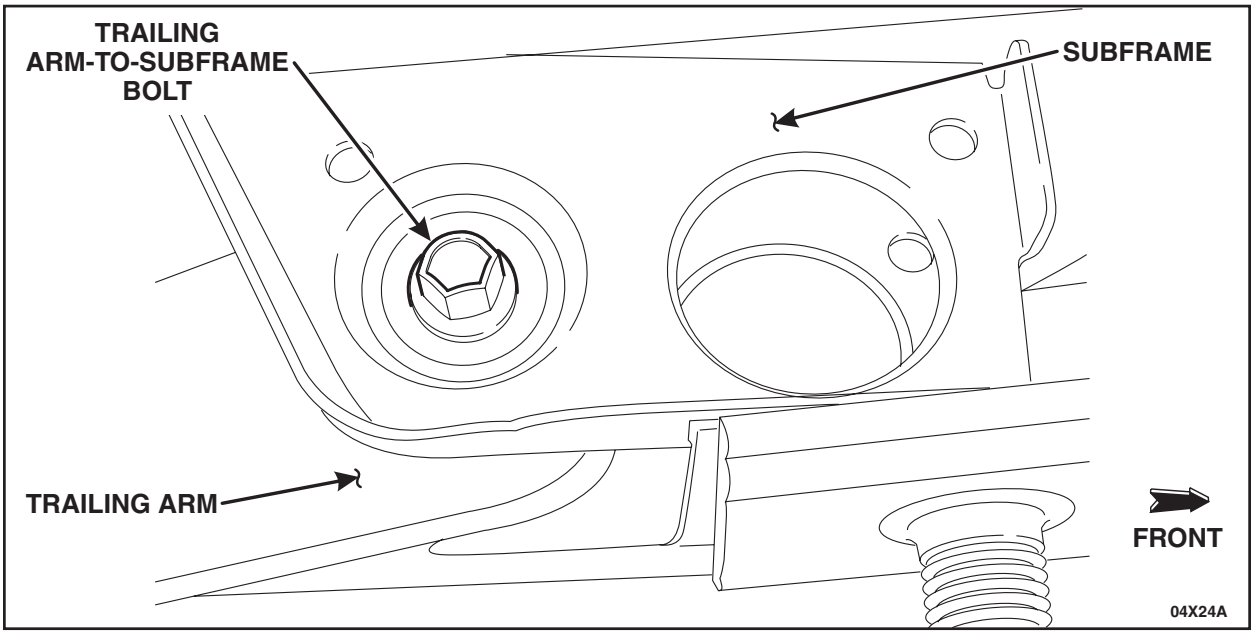

FIGURE 6

CPR © 2010 FORD MOTOR COMPANY
DEARBORN, MICHIGAN 48121
12/2010

10. Carefully lower the rear axle and remove it from the vehicle.

11. **NOTE:** If the spring lower insulators did not come out with the springs, remove the insulators from the rear axle assembly.

    Remove the jounce bumper bolts and bumpers, and if necessary, the spring lower insulators. The jounce bumpers and the spring lower insulators will be reused with the ***new*** rear axle.

CPR © 2010 FORD MOTOR COMPANY
DEARBORN, MICHIGAN 48121
12/2010

Installation

NOTICE: **Do not tighten the rear suspension fasteners until the rear axle has been raised and the rear suspension has been loaded. By lifting the rear axle and loading the rear suspension, it will simulate the vehicle's ride height. Failure to follow these instructions may result in incorrect clamp load and bushing damage may occur.**

12. Install the jounce bumpers, and if necessary, the spring lower insulators on the ***new*** rear axle.
    - Tighten to 25 Nm (18 lb-ft).
13. Using a High Lift Transmission Jack 014-00942 or equivalent, raise the rear axle assembly in position and install the trailing arm-to-subframe bolts. See Figure 6.
14. Position the spindle, hub and brake assemblies in place.
15. Install the four spindle retaining nuts. See Figure 4.
    - Tighten to 70 Nm (52 lb-ft).
16. **NOTE:** Make sure the spring upper insulators are positioned correctly on the springs.

    Install the springs on the rear axle assembly. Make sure the springs are correctly seated.
17. Raise the rear axle assembly and position the shock absorbers on the rear axle. Install the shock absorber lower bolts.
18. Install the J-nut on the rear axle track bar mounting bracket. Position the track bar on the rear axle track bar mounting bracket and install the track bar bolt. See Figure 2.
19. Load the rear suspension by raising the axle assembly. Once the rear suspension has been loaded, tighten the following components:
    - Tighten the trailing arm-to-subframe bolts to 133 Nm (98 lb-ft).
    - Tighten the shock absorber lower bolts to 80 Nm (59 lb-ft).
    - Tighten the track bar bolt to 80 Nm (59 lb-ft).
20. Remove High Lift Transmission Jack 014-00942 or equivalent.
21. Position the parking brake cable brackets in place and install the parking brake cable bracket nuts. See Figure 1.
    - Tighten to 25 Nm (18 lb-ft).
22. Install both rear wheel and tire assemblies. For additional information, refer to the WSM, Section 204-04.
23. Lower the vehicle.

CPR © 2010 FORD MOTOR COMPANY
DEARBORN, MICHIGAN 48121
12/2010