ODI RESUME

INVESTIGATION: EA91-010 DATE CLOSED :31-DEC-91

SUBJECT : GEAR SHIFT LEVER FAILURE
PROMPTED BY : DP90-014

ENGINEER : L. STRICKLAND C. Strickland

MFR: : CHRYSLER CORPORATION
MODEL(S) : FRONT WHEEL DRIVE MODELS WITH AUTOMATIC TRANSMISSION, 4-CYL ENGINE, AND COLUMN MOUNTED SHIFT LEVER
MODEL YR :

SYNOPSIS : ALLEGED FAILURE OF TRANSMISSION PARK LOCK SYSTEM ALLOWS INADVERTENT SHIFT FROM PARK TO REVERSE, PERMITTING VEHICLE ROLLAWAY.

VEHICLE POPULATION: 3.84 MILLION

BASIS:	FAILURE REPORT ANALYSIS TOTALS
COMPLAINTS:	318
ACCIDENTS :	212
INJ ACCID :	109
# INJURED :	111
FAT ACCID :	7
# FATALS :	7
OTHER :	0

DESCRIPTION OF OTHER:

ACTION: THIS ENGINEERING ANALYSIS HAS BEEN CLOSED.

BRCH CHF Richard Boyd 31-Dec-91 DATE

DIV CHF Louis Brown Jr. 31 Dec 91 DATE

Acting OFC DIR 12/31/91 DATE

SUMMARY: REFER TO THE ENGINEERING ANALYSIS CLOSING REPORT.

Boyd

ENGINEERING ANALYSIS CLOSING REPORT

SUBJECT: ALLEGED MALFUNCTION OF AUTOMATIC TRANSMISSION PARK LOCK SYSTEM IN 1981-1990 CHRYSLER MOTORS CORPORATION VEHICLES

EA No.: EA91-010 Date Opened: 10-DEC-90 Date Closed: DEC 31 1991

BASIS:

The Center for Auto Safety (CAS) petitioned the National Highway Traffic Safety Administration (NHTSA) by letter dated July 16, 1990, to initiate investigation of alleged malfunctions of the park lock systems installed in certain 1981 through 1989 model year vehicles produced by the Chrysler Motors Corporation. The vehicles were identified as front wheel drive models equipped with automatic transmissions and steering column mounted gear shift levers. The petition (DP90-014) alleged that such malfunctions allow the automatic transmissions to inadvertently shift from the "Park" position into Reverse gear, resulting in incidents in which unattended vehicles roll away. The petition claimed that 76 such incidents had resulted in property damage and injury accidents, as well as two fatalities.

An analysis of information relevant to the petition was conducted and, the petition was granted. The subject EA was initiated on December 10, 1990, to evaulate the matter more thoroughly. In response to the petitioner's request dated July 31, 1990, the investigation was expanded to include the 1990 minivan models.

THE ALLEGED DEFECT:

The common description of the alleged defect by consumers is that the ". . . transmission jumped out of Park and went into Reverse. . . ."

This investigation, however, considers the alleged defect from a broader perspective in order to establish whether such a defect exists in fact, and if so, to determine its precise nature and cause. In this EA, the alleged defect is therefore defined as failure of the automatic transmission to properly engage or lock in the "Park" position when shifted to that position by the vehicle operator.

DESCRIPTION OF VEHICLE SYSTEM:

The subject vehicles of this EA are 1981 through 1990 front wheel drive models produced by the Chrysler Motors Corporation, each equipped with a four-cylinder engine, an automatic transaxle, and the gear selector lever mounted on the steering column. Vehicles with the shift lever mounted in a floor console are not included in this investigation.

The basic transaxle installed in the subject vehicle group is identified as Model A-413, and the model A-470 transaxle is available as optional equipment. Both transaxles combine a torque converter, fully automatic 3-speed transmission, final drive gearing, and differential into a front wheel drive system. The A-413 model is designed and built by Chrysler and is installed in vehicles using 2.2 liter and 2.5 liter engines, which are also built by Chrysler. The primary difference between the two transaxles is that the bell housing of the A-470 is sized to accommodate mounting of the transaxle to a 2.6 liter, 4-cylinder engine which is designed and built for Chrysler by an outside supplier. The fully automatic transmissions and shift mechanisms are identical in both transaxle models, for vehicles with column mounted shift levers.

The automatic transmission gear selector system includes the entire mechanism, from the gear selector lever to the internal components of the transmission. The gear selector mechanism transmits the selecting action of the vehicle operator to the transmission.

Details of the gear selector mechanism installed in the subject vehicles are shown in Figures 1 through 3. When the vehicle operator shifts to a selected gear, tactile feedback is provided by a combination of component loads and frictional forces within the shift mechanism. When any gear position is selected, the shift lever slides over a gearshift lever gate located inside the steering column housing. For each transmission gear position there is a corresponding position on the gate. The gate is designed so that in order to shift from Reverse to Park, the vehicle operator must first pull the shift lever toward the steering wheel, then apply a counterclockwise force to the shift lever, i.e., push the lever upward toward the windshield. The limit of rotational movement of the shift lever is established by a hard stop on the shift gate. The gear selector indicator provides visual validation of the selected gear position.

The rotational shift input force by the vehicle operator (and the gear selection) is transmitted to the transmission as a linear displacement via a cable which extends from the base of the steering column to a bellcrank which is attached to the manual lever of the transmission (Figure 1). Linear movement of the cable is converted to a rotational

force by the bellcrank which rotates with the manual lever assembly and "rooster comb" about a common center (Figure 4). The rooster comb contains a detent position for each gear that corresponds to a position on the shift lever gate.

Each gear position on the rooster comb is locked by a spring loaded detent roller. Thus, when the vehicle operator selects a transmission gear, he also selects a position on the rooster comb. This action also selects the position of the manual valve which opens or closes a series of internal ports in the transmission, permitting or preventing the flow of fluid through the proper hydraulic circuits within the transmission. This action, in turn, controls the delivery of engine power to the driving wheels of the vehicle.

When the transmission is placed in the Park position, the manual lever and rooster comb are rotated so that the detent roller engages the park position of the rooster comb. Simultaneously, rotation of the manual lever assembly linearly displaces the parking rod, actuating the park pawl and engaging the park gear (Figure 5). In this position, the transaxle output shaft is mechanically locked to prevent rotation of the powered wheels. In a properly adjusted gear selector mechanism, the Park position of the shift lever gate will correspond to the Park position of the rooster comb and engagement of the park gear of the transmission. The key can be removed from the ignition switch only when the gear selector is in Park.

The transmission park lock system is properly engaged when the park pawl engages the teeth on the park sprag gear. When shifted into Park, these teeth either engage or butt against each other; full engagement effects park lock. If the park pawl and the park gear teeth butt, the pawl will seat in the teeth of the park gear only after slight vehicle movement rotates the park gear and permits proper lineup of the teeth with the pawl.

FAILURE/MALFUNCTION MODES:

Several potential failure or malfunction conditions are considered in this EA, as follows:

1. Mechanical disengagement of the transmission park lock system so as to release the powered wheels and allow the vehicle to move in a rearward direction.

2. Mechanical or hydraulic shift of the transmission from the Park position into reverse gear, resulting from fluid pressure in the reverse gear circuit of the transmission, providing engine power to the driving wheels.

3. False park conditions that may provide tactile or visual indication to the driver that the transmission has been properly shifted into the Park position when, in fact, it has been shifted to an intermediate position between reverse and Park.

   This false park indication could potentially result if either of the following were observed by the driver:

   a. Friction in the transmission shift linkage produces a peak in the input force required to shift from reverse to park before the true park position is selected.

   b. Misadjustment or plastic deformation of any of the components of the transmission shift linkage so that the gear selector indicator shows the Park position to have been selected when, in fact, the transmission park lock system has not been engaged.

4. Performance characteristics of the vehicles that could, under varying conditions of static inertia or engine load, cause the transmission to accidentally shift from Park into reverse gear.

This EA addressed all of the potential conditions cited above, in an effort to determine whether any of these conditions suggest a safety-related defect in the design or performance of the subject automatic transmission park lock systems.

This EA is limited in its concern to inadvertent shift of the transmission from Park into reverse gear. There are known consumer reports of malfunctions at other points in the "PRNDL" shift sequence of automatic transmissions, however, this investigation does not address those reported problems.

CORRESPONDENCE:

Supplement			Confidentiality		
NHTSA to Requested	Mfr. to Response	Mfr. to NHTSA Supplement	Date Requested	Date NCC Response	Items Confidential
07/03/91	10/18/91	N/A	N/A	N/A	N/A

STATUS

PROBLEM EXPERIENCE:	EA Opened	EA Closed
Owner/Field Reports	269	318
Lawsuits	17	23
Accidents/ Property Damage	199	212
Injury Accidents/ Injuries	90/ 92	109/ 111
Fatal Accidents/ Fatalities	4/ 4	7/ 7

VEHICLE POPULATION:

The following tabulation shows the makes, models, and model years of the subject vehicles equipped with A-413 and A-470 automatic transmissions and column mounted gear selector levers produced by Chrysler for domestic sale. All of the subject vehicles are equipped with 4-cylinder engines. They represent 65.3 percent of the total of the given makes and models produced for the model years in question. The remaining 34.7 percent of the total production are vehicles equipped with console shift levers or six cylinder engines, or both.

YEAR/MAKE/MODEL	POPULATION
1981-1989 Dodge Aries	816,000
1981-1989 Plymouth Reliant	991,000
1982-1983 Dodge 400	28,000
1984-1986 Dodge 600 - 2DR	14,000
1983-1987 Dodge 600 - 4DR	150,000
1982-1987 Chrysler Lebaron	316,000
1985-1987 Chrysler Lebaron GTS	33,000
1985-1987 Dodge Lancer	33,000
1985-1988 Plymouth Caravelle	134,000
1983-1988 Chrysler New Yorker	282,000

1983-1984 Chrysler E-Class	71,000
1984-1990 Dodge Caravan	474,000
1987-1990 Dodge Grand Caravan	2,000
1984-1990 Dodge Caravan C/V 112WB	62,000
1987-1990 Dodge Caravan C/V 119WB	1,000
1984-1990 Plymouth Voyager	435,000
1987-1990 Plymouth Grand Voyager	2,000
1990 Chrysler Town and Country	0
TOTAL	3.84 Million

WARRANTY:

Warranty information was not considered relevant to this investigation and was not acquired.

SERVICE BULLETINS:

No service bulletins, advisories, or related literature were reported by Chrysler to have been issued regarding the alleged defect in the subject vehicles.

PART SALES:

Part sales information was not considered relevant to this investigation and was not acquired.

DESIGN, MATERIAL, AND/OR PRODUCTION MODIFICATIONS:

The following design, materials, and/or production modifications were identified as potentially relevant to this EA:

1. October 1982 - added an adjustment preload spring to the shift cable at the transaxle end to eliminate the need for a special adjustment tool at the assembly plant.

2. July 1983 - changed specifications for heat treatment of the park sprag rod to require hardening of the portion of the rod under the pawl actuating bullet, and to specify more positive control of removal of the heat treat scale from the rod. This was done to reduce variability of friction in the park sprag system.

3. July 1983 - eliminated forging of the park sprag pawl to allow stamped versions only. The superior surface finish and dimensional control offered by the stamped version also reduced the variability of friction in the park sprag system.

4. February 1990 - changed details in the sliding components of the PRNDL indicator in S-body (mini-vans) vehicles to increase sliding friction. This was done to ensure positive alignment of the indicator with the display gear positions so that severe vibration inputs would not cause movement of the indicator.

In November 1991, a meeting of NHTSA engineers and Chrysler Automotive Safety staff and product development personnel disclosed an additional production modification. A new vendor began supplying the shift cable to Chrysler at the start of the 1988 model year production. The new vendor produced a cable with a slightly modified configuration from that of earlier production. Although the new cable was physically different from the earlier version, Chrysler's performance specification for the cable (including allowable friction) was not altered. The new cable was designed to be completely interchangeable with the earlier version.

<u>TESTING</u>: Contractor: Vehicle Research and Test Center (VRTC)

Date of Test Request: 8/21/91

Description: A test plan was devised to accomplish the following objectives:

1. Evaluate whether the transmission park lock system is subject to malfunction as a result of component wear and/or deterioration.

2. Evaluate whether the "feel" or tactile feedback characteristics of the gear shift lever could give a false indication to the driver that the Park position has been properly engaged.

3. Compare the performance of the transmission park lock system to peer vehicles.

Results: The VRTC test program included several areas of inquiry and evaluation.

1. Several central Ohio area residents who had reported the alleged defect in their personal vehicles were identified and contacted. Three of these consumers were interviewed and their vehicles inspected. None of these vehicles was found to exhibit a malfunction as had been described by the owners. One vehicle from this group was used as a test vehicle. After all in-vehicle tests were completed, the transmission and shift mechanism were removed, disassembled and inspected. No evidence of component failure, or of unusual wear or deformation was found.

2. A complete gear shift mechanism of the subject type in this investigation was acquired, cut away at key locations on the linkage, and affixed to a stationary mount so that the various component displacements and actions during shifting could be observed.

3. Visual inspections enabled a qualitative determination that the input force levels required to plastically deform of any of the components in the shift mechanism would exceed the physical capabilities of most vehicle operators. Further, the forces necessary to achieve such deformation are so abnormally high that any reasonable vehicle operator would probably have concern about bending or breaking the shift lever, and would almost certainly realize that the forces far exceed "normal" shifting actions.

4. Tests were conducted to determine and compare the average force required to shift the transmission from one gear position to the next position in the PRNDL sequence. Several vehicles were employed for these tests, as follows:

   - 1989 Plymouth Voyager, 58.4 K miles, vehicle reported to have exhibited P-R malfunction

   - 1984 Plymouth Reliant, 117.0 K miles, no malfunction reported

   - 1988 Ford Taurus, 68.2 K miles, no malfunction reported

   - 1986 Buick Electra, 39.3 K miles, no malfunction reported

   - 1987 Toyota Camry, 72.2 K miles, floor mounted shift lever, no malfunction reported

The results of the tests conducted with the engine on are summarized in the table below. The shift forces measured in pounds with the engine off were consistently lower than with the engine on. Shift force in the test vehicles was determined by using hand-held force gauge with digital readout, with the force applied approximately 1.5 inches from the end of the shift lever. The force was applied in the direction of normal driver shifting action, at quasi-static loading rate. This procedure was followed in both directions of the PRNDL sequence, and the averages of three readings are reported below.

SHIFT FORCE REQUIRED, POUNDS

Shift Position	L-2/1-2	2-D	D-OD*	OD-N/D-N	N-R	R-P
89 Voyager	6.2	6.3	--	5.8	6.3	9.2
84 Reliant	7.2	6.0	--	5.2	4.5	6.5
86 Electra	10.8	8.7	8.3	7.7	7.0	7.5
87 Camry	6.3	6.0	--	6.2	6.0	6.2
88 Taurus	--	7.3**	7.5	7.3	7.3	7.0

* OD denotes OVERDRIVE in shift sequence
** Value given for 1-D in Taurus shift sequence

The measurements of required shift force produced several significant findings. First, while the actual values of force varied from one vehicle to another and at various points in the PRNDL sequence, they are all of the same order of magnitude and the variations are small. Second, the values are small in comparison to the physical capabilities of most drivers. Third, different transmission designers appear to use different relative values of shift forces required at various points in the shift sequence. There is no known evidence, however, to show that any one such force is more or less "correct" than any other.

The Chrysler-produced vehicles included in the test group required a small increase in the force required to shift from reverse to Park, as compared to some of the other vehicles in the sample. However, the data do not suggest any significant difference in required shift force among these vehicles for two reasons. First, the absolute values of the increase in force observed in all vehicles are much lower than the forces humans can impose. As such, the measured differences are not perceptible to most drivers.

Second, the margin for error in the measurements has not been quantified, and test-to-test variability has not been established, although the test procedure used was simple, consistent and repeatable.

Another set of tests conducted at VRTC show that the transmission can be shifted to a position between Reverse and Park (detent roller below the peak on the rooster comb), provided that the driver is willing to spend the time and effort to do so through a trial and error process. The tests also showed that, after purposely shifting the transmission to such an intermediate position, almost any external disturbance of the vehicle (e.g., air conditioning cycles off, door is slammed shut), is sufficient to cause the detent roller to fall into the reverse position, allowing the vehicle to roll away under power. Similarly, tests showed that with the transmission shifted to such an intermediate position, it is possible that hydraulic leakage within the manual valve can occur so that pressure begins to build up within the reverse fluid circuit, and that when this pressure reaches about 25 psi, the vehicle will roll away under power. These results were characteristic of all vehicles tested, however, so no defect was apparent in the subject Chrysler vehicles.

ADDITIONAL INFORMATION:

The number of complaints of park lock system malfunctions received from all sources represents a small proportion of the affected vehicle population. When the number of opportunities for such an event is considered, even qualitatively, it is apparent that such occurrences are rare. The 318 incidents reported in this investigation for a vehicle population of 3.8 million, represent an incident report rate that is an order of magnitude smaller than the rate found in a previous NHTSA investigation of a similar malfunction involving vehicles produced by the Ford Motor Company (C78-02, in which 23,000 incidents were reported for a population of 21 million vehicles). From a statistical perspective, therefore, the number of incidents reported to have occurred over a total exposure period of more than 10 years, does not suggest that a trend of failure or malfunction has been demonstrated in the subject vehicles. On the contrary, the number of incidents reported in this EA suggests that each event represents a random, isolated occurrence.

NHTSA representatives inspected the vehicles owned by seven complainants of park lock system malfunctions (Russell, Fink, Moore, Bidwell/Stalder, Smith, Ostrowski, and Burk). Several other vehicles, within the subject vehicle group not reported to have experienced a park lock problem, were also inspected in search of any clue of a potential mechanical causal factor. Detailed reports of two of the incidents, including one case involving a fatality, were prepared and placed in the investigative file.

Inquiry was made into the details of a second fatal incident (Tanaka), but the vehicle was not readily available for inspection due to its geographic location. In the absence of specific causal information in the other five incidents, detailed reports were not prepared, although one of these vehicles was used as a test vehicle at VRTC. In the total of 12 vehicles inspected by NHTSA engineers, none showed evidence of a malfunction, and no deficiencies in the design or performance of their gear selector mechanisms were detected.

In an effort to assess whether the subject vehicles showed a history of accidents potentially resulting from malfunctions of a transmission-related nature, NHTSA'S National Center for Statistics and Analysis (NCSA) conducted searches of their data files in support of this investigation. The Fatal Accident Reporting System (FARS) files were searched for listings of fatal accidents involving passenger cars, light trucks, and minivans which occurred during calendar years 1981 through 1990, involving certain vehicle makes with rear impact point and no driver present in the vehicle at the time of the accident. The FARS file search disclosed listings of four fatal accidents involving Chrysler vehicles, as compared with 43 fatal accidents involving Ford models, 46 involving Chevrolet models, 52 involving Buick/Cadillac/Pontiac/ Oldsmobile models, and 12 involving Honda models.

A review was also conducted of individual state data files for any notation on the police accident reports which may have identified a "defective transmission," or any defect related to the transmission. Texas was the only state with such a notation, and there were insufficient data to draw any conclusion regarding the accident involvement of 1981 through 1990 model year passenger cars, light trucks, and light vans produced by Chrysler Motors, General Motors, Ford, and Honda.

NCSA data for the six CARDfile states (Indiana, Maryland, Texas, Michigan, Pennsylvania, and Washington) were also examined for calendar years 1987-1989. The data analysis included passenger cars, light trucks, and light vans for comparison of two vehicle groups: (1) Chrysler, Dodge, and Plymouth, and (2) All Makes. The analysis was conducted to investigate the "type 611" accident, i.e., one vehicle is moving in a reverse direction and strikes another vehicle, object, pedestrian, or pedacyclist. This accident type includes the situation in which a vehicle may unintentionally make a backing maneuver where there was potentially a slippage of the transmission from Park to Reverse. Although this accident type includes causal factors other than possible malfunction of the transmission park lock system, it was searched because it represents the only potentially relevant accident scenario for which comparative data were available.

The CARDfile analysis disclosed that 3,191 Chrysler vehicles were involved in type 611 accidents, which accounted for 0.9 percent of all crashes involving this vehicle group. In comparison, there were 37,506 vehicles of all makes involved in such accidents, which accounted for 1.0 percent of all crashes involving all makes during the time period studied. Thus, it is clear that Chrysler vehicles are not over-represented, in comparison to all other vehicle makes, in their involvement in collisions while moving in a reverse direction due to all causes, including possible transmission park lock system malfunctions. Although a more relevant analysis would have entailed review of crashes with no driver present in the vehicle, there were insufficient data available to enable this additional study. Thus, based on analysis of all available real world accident data, there is no suggestion of a defect associated with the transmission in the subject vehicles.

Analyses were performed of the design elements of the shift mechanism to determine whether the physical contours and positional relationships between components which actuate the engagement of park lock were inherently subject to actual malfunction or false park indications. Figures 6 and 7 depict the correlations between the position of the manual lever detent roller on the rooster comb and the position of the manual valve which actuates the hydraulic circuits of the transmission.

From Figure 6, it is seen that the angular displacement of the detent roller from the bottom of the Reverse position to the bottom of the Park detent is 12.83 degrees. With the detent roller in the reverse gate, the manual valve is actuated to the full open position in the reverse gear circuit.

Figure 7 shows further detail of these relationships. This depicts the full angular displacement between Reverse on the shift lever gate and Park on the rooster comb of 13.4 degrees. When the shift lever is moved from Reverse-to-Park, hydraulic reverse is lost at 8.1 degrees before the shifter seats in the Park gate, meaning that the manual valve closes the Reverse fluid circuit in the transmission. At 6.8 degrees before seating of the roller in the Park detent, the park sprag locks in the Park position. This occurs 1.6 degrees before the Reverse-to Park detent peak is reached, or 5.2 degrees before full seating of the roller in the Park detent. At 2.8 degrees before full seating of the detent roller in the Park detent, the PRNDL indicator inside the passenger compartment will indicate that the Park position has been selected. At zero degrees, the shift lever is fully seated in the park gate inside the steering column, the detent roller is seated at the bottom of the Park detent on the rooster comb, and the ignition key can be removed from the switch.

Several facts are disclosed in this information. First, the angular displacement between Reverse and the Reverse-to-Park detent peak is 7.6 degrees, or about 0.39 linear inches on the rooster comb (the difference between the bottom of the reverse detent at 12.8 degrees and the Park-Reverse detent peak at 5.7 degrees, is 7.6 degrees-See Figure 7). Tests indicate that minimal shift lever force is required to move the detent roller this distance. Because the spring loaded detent roller maintains line contact with the rooster comb, once it has passed the detent peak, it will tend to fall into the full Park position. On the Reverse side of the peak, it will tend to fall back toward Reverse, but this will occur immediately unless the vehicle is positioned so that its static rolling resistance prevents the wheels from rolling in the reverse direction.

The most significant fact disclosed by this analysis of the design, confirmed by inspections of complainant vehicles and tests conducted at VRTC, is that shifting the transmission to a position between Reverse and Park is an extremely tedious, totally unrealistic action to be taken by a vehicle operator in an actual driving or parking situation. There are no apparent or logical reasons that explain precisely why a vehicle operator would purposely try to leave the transmission in a shift position midway between Reverse and Park.

Similarly, vehicle inspections, examinations of the shift mechanisms on test stands, and VRTC tests disclosed no evidence of a propensity of these mechanisms to exhibit false park. This condition would be evidenced by a sudden increase in the force required to move the gear shift lever beyond any point between the true reverse position and the full engagement of true Park. Such an increase in the required shift force could be falsely interpreted by a driver as confirmation that the Park position had been properly engaged. No evidence was found of such an increase in the force required to shift from Reverse to Park at any point between the two positions on the rooster comb. On the contrary, tests showed the shift action from Reverse to Park to be smooth and free of false indication of Park, and the amount of force required to accomplish the shift to be minimal. In addition, the components of the system appear to have been designed to carry far greater loads than almost any driver is likely to exert during the shift process, and in the unlikely event that any component of the mechanism should become permanently damaged through excessive shift force, the transmission will engage in the Park position before the PRNDL indicator shows that the shift sequence has been completed.

If the park lock system is engaged with the vehicle on an incline, or with the wheels firmly abutted against a curb, the park pawl may engage the park gear teeth under considerable load. In such an instance, the vehicle operator may experience difficulty in shifting the transmission out of the Park position. This problem can be overcome if

the vehicle can be rocked back and forth in its stationary position enough to momentarily rotate the axle slightly and release the load on the pawl while the transmission is shifted out of Park. Although this condition is not the principal concern of this EA, it is mentioned because some vehicle owners have complained of this occurrence. It is also noted that Chrysler engineering standard PF-8107 requires that the subject transmissions be tested for "pull out of Park effort" with the vehicle at a maximum gross weight and on a 32 percent grade. The standard allows a maximum effort of 45 pounds and specifies that after 200 test cycles, no physical damage and/or misalignment is permitted to the PRNDL indicator, shift linkage, or manual lever.

WARNING SYMPTOMS:

There are no symptoms to warn that the subject transmission has not been properly engaged in the Park position with the engine running. If the engine is off, however, warning of improper engagement in Park is evidenced by the fact that the key cannot be removed from the ignition switch. This verifies that incidents of alleged unpowered vehicle roll away also involve the operator having left the ignition key in the switch.

CONTRIBUTING FACTORS:

This EA focused on understanding and evaluating the physical design features of the subject gear selector and transmission park lock systems, in an effort to ascertain whether design or materials deficiencies could precipitate system malfunctions as a result of component failure or wear.

Proper and complete shifting of the automatic transmission into Park is an oft-repeated, but critical task associated with safe motor vehicle operation. All automatic transmissions with mechanical park lock engagement can be improperly or incompletely shifted to that position. Because it was recognized that proper driver input is necessary to engage the park lock system, the lack of this input was considered to represent a potential contributing factor in incidents upon which this investigation was based.

MANUFACTURER'S EVALUATION OF THE ALLEGED DEFECT:

The manufacturer believes that the dominant causal factor regarding the alleged defect is failure of the vehicle operator to properly engage the gear selector mechanism in the Park position during "quick stop" circumstances before exiting the vehicle. Chrysler notes that most of the reported incidents involve the operator exiting the vehicle and leaving the engine running in order to perform another task of short duration and that in doing so, fails through inattentiveness to verify proper engagement of Park.

Chrysler also states that there are no elements of the gear selector system linkages, transmissions, or vehicles capable of greating an independent force sufficient to shift the transmission from the Park to Reverse position. Finally, Chrysler notes that the frequency of occurrence of the reported malfunction is very low and,". . . in the absence of any product defect trend, Chrysler does not believe that the alleged defect represents an unreasonable risk to motor vehicle safety."

REASON FOR CLOSING:

This investigation has not disclosed the existence of a safety defect in the transmission park lock systems of the subject vehicles. The following specific findings provide a basis for closing this EA:

1. The number of incidents reporting malfunction of the park lock system, in the context of the vehicle population and exposure time, does not identify a trend of failure.

2. Accident data show that the subject vehicles, when compared to peer vehicle groups, have not shown an over-involvement in accidents of the types that would indicate possible park lock system failure.

3. Tests showed that the amount of force required to shift the subject transmissions to the Park position is not significantly different from the forces required to perform the same shifting task in other vehicles, and that these force levels are well within the capabilities of most drivers.

4. Tests also disclosed no tactile feedback to an operator of the subject vehicles that give false indication of complete and proper engagement of the Park position.

5. Analysis of the subject transmission shift mechanism did not disclose a mechanical or hydraulic defect that would cause the subject transmissions to shift from Reverse to Park without external input.

6. No deficiencies in the materials, performance, or manufacture of the subject park lock systems that could result in Park to Reverse shifting malfunctions were identified in this investigation.

A safety defect in the design, materials, or performance of the subject transmission park lock system has not been identified, and further expenditure of agency resources in this matter is not warranted.

Safety Defects Engineer — Date: 12/31/91

I Concur:

Chief, Vehicle Control Branch — Date: 12/31/91

Chief, Defect Evaluation Division — Date: 12/31/91

Acting Director, Office of Defects Investigation — Date: 12/31/91

Figure 1. Components of Gear Selector Mechanism

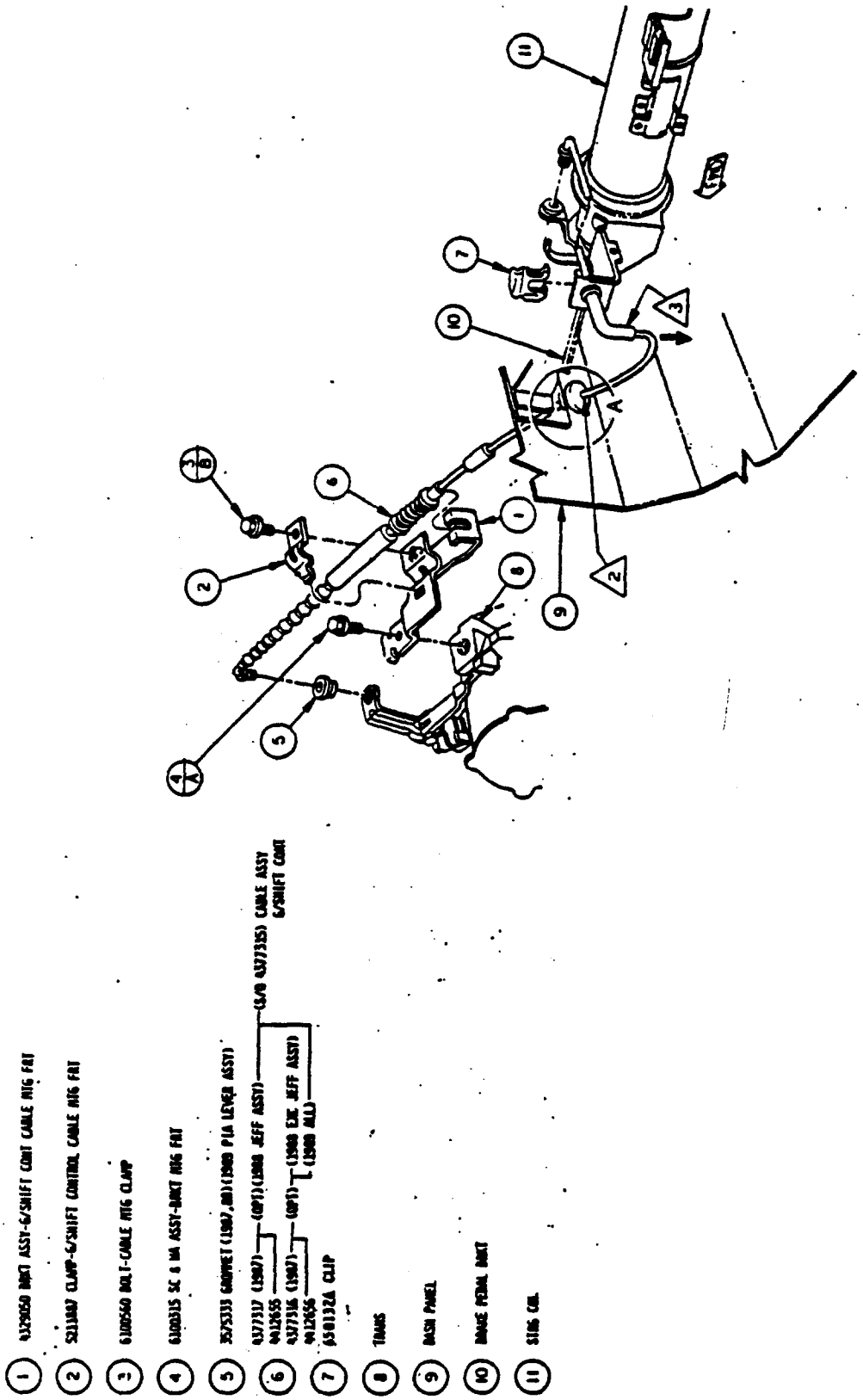

Figure 2. Steering column upper end showing installation of shift lever gate

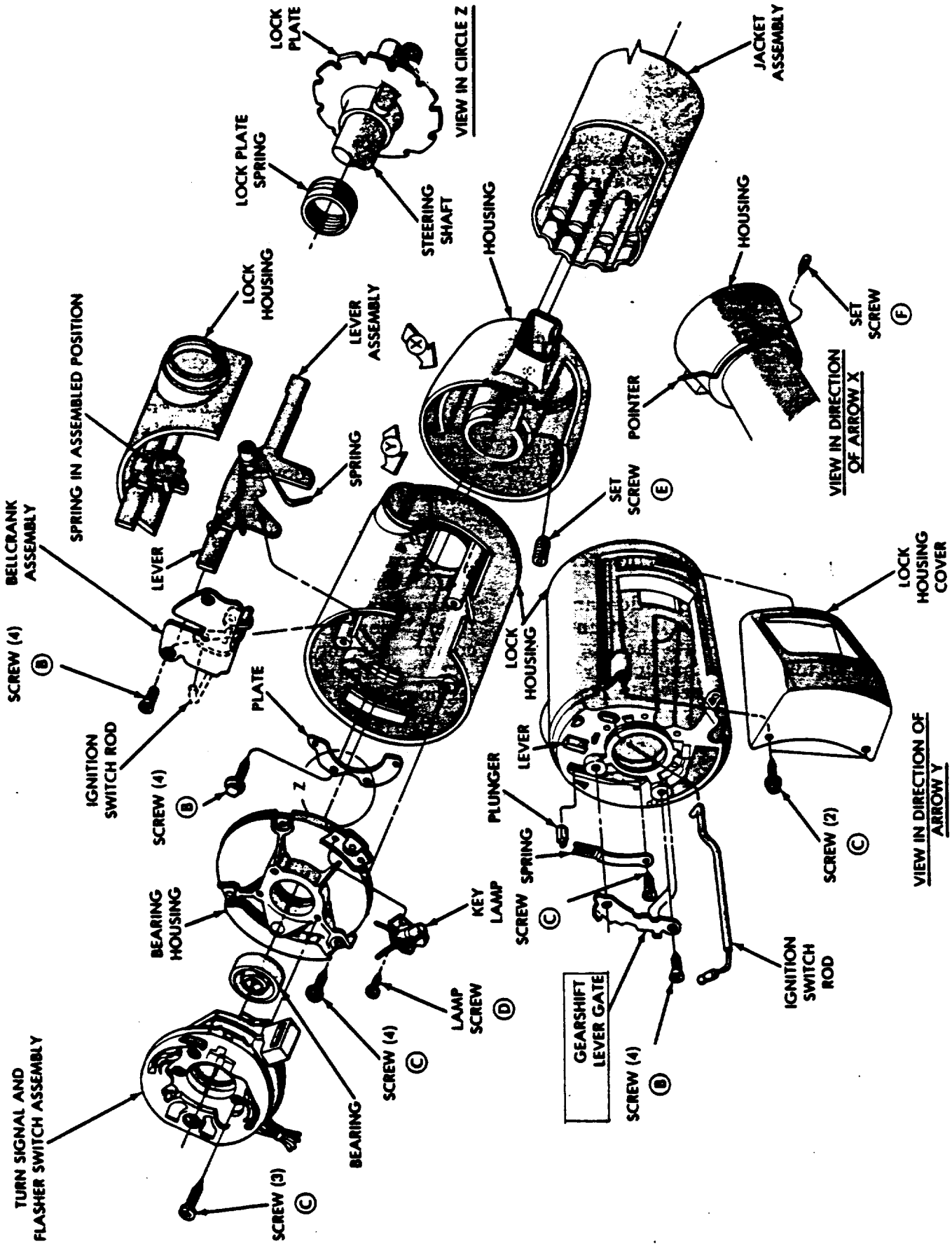

Figure 3. Shift lever installation and lock housing with gate

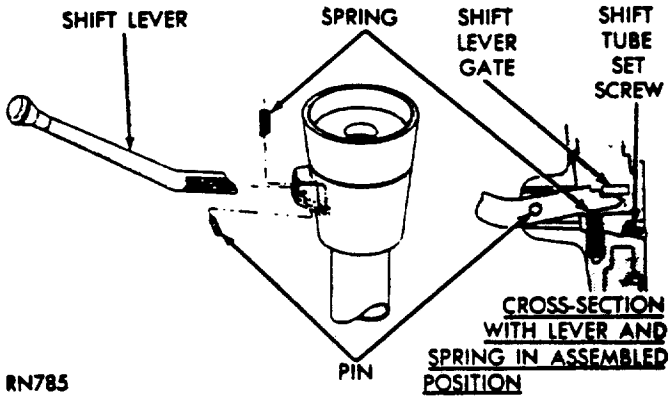

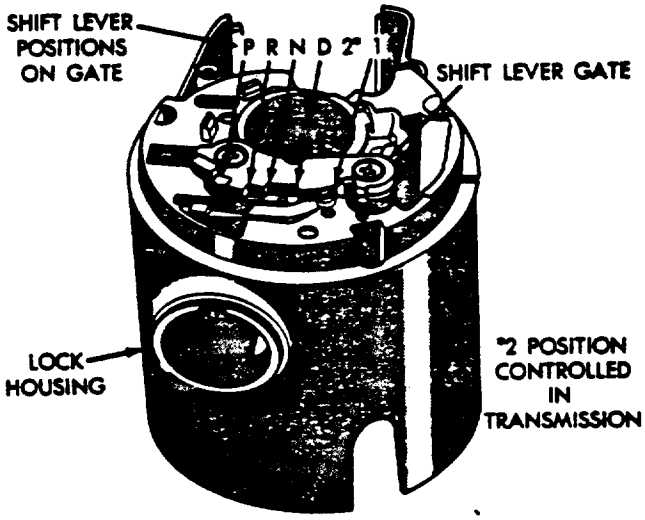

Figure 4.

A. Manual valve and lever assembly, showing manual lever, rooster comb, and spring loaded detent roller engaged in Park detent of rooster comb.

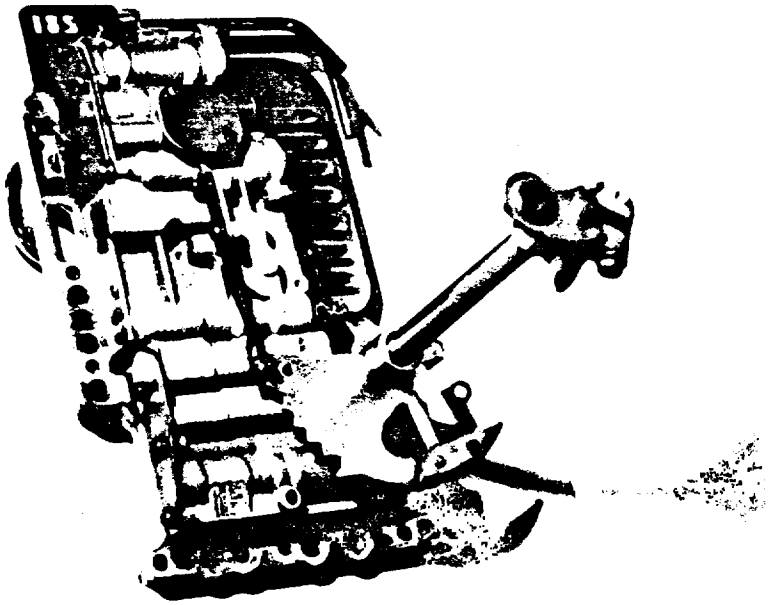

B. Manual valve and lever assembly, also showing manual lever bellcrank with park rod attached.

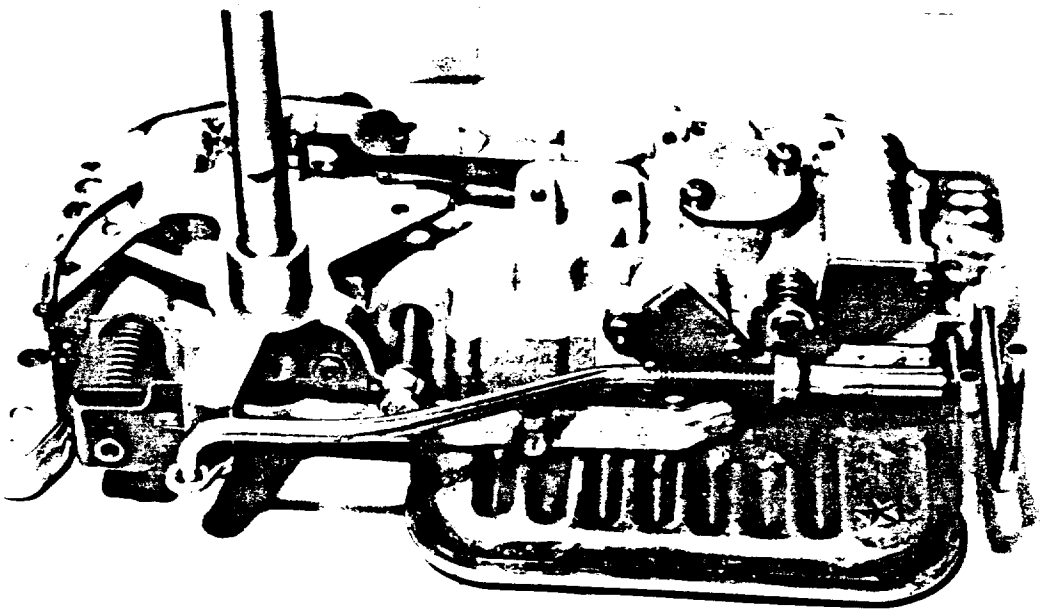

Figure 5.

A. Location of park rod installed. Park pawl located under cone of park rod at left.

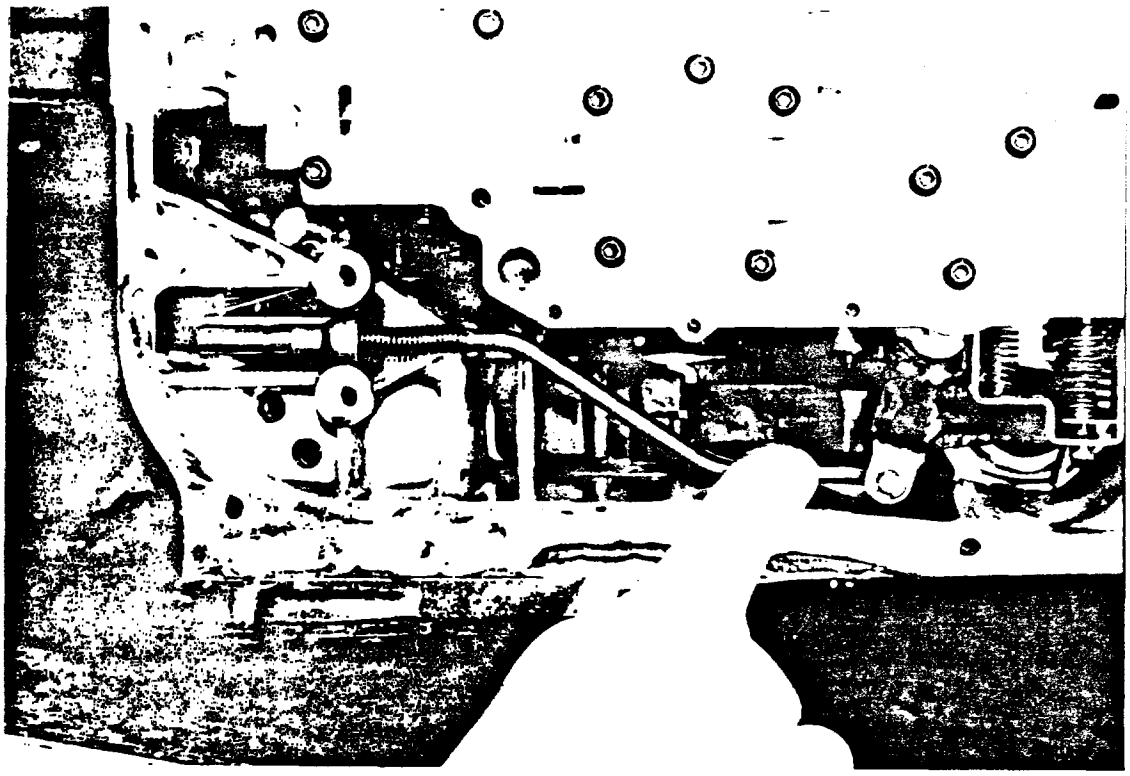

B. Park Not Applied. Relative positions of park rod (with cone), park pawl, and park gear.

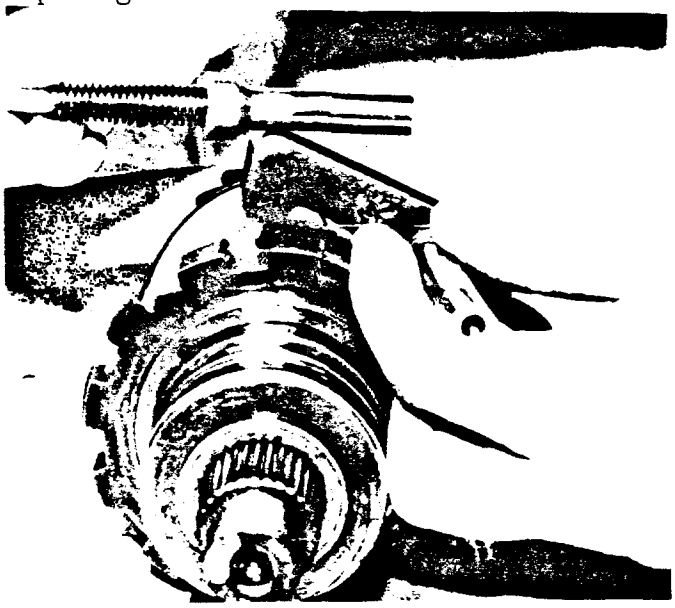

C. Park Applied. Park pawl engages park ge. Transmission output shaft locked.

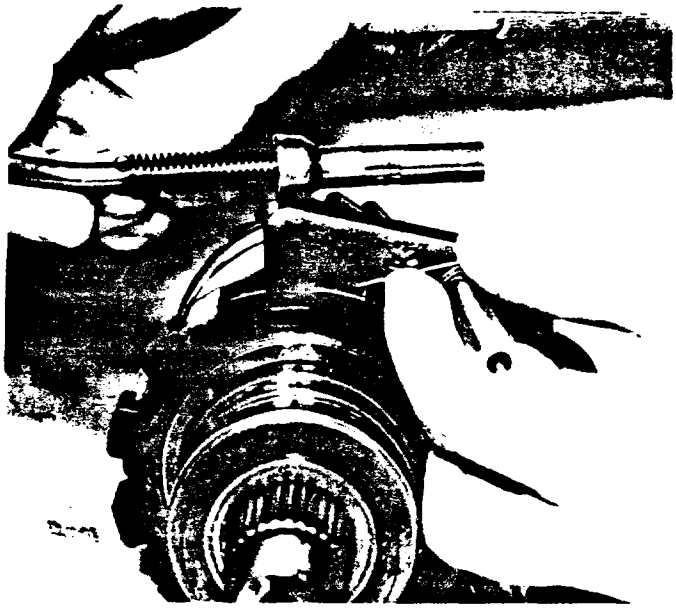

Figure 6. Angular displacement between reverse and park in rooster comb. Detent roller at reverse gear, manual valve fully open at R, vent fully closed.

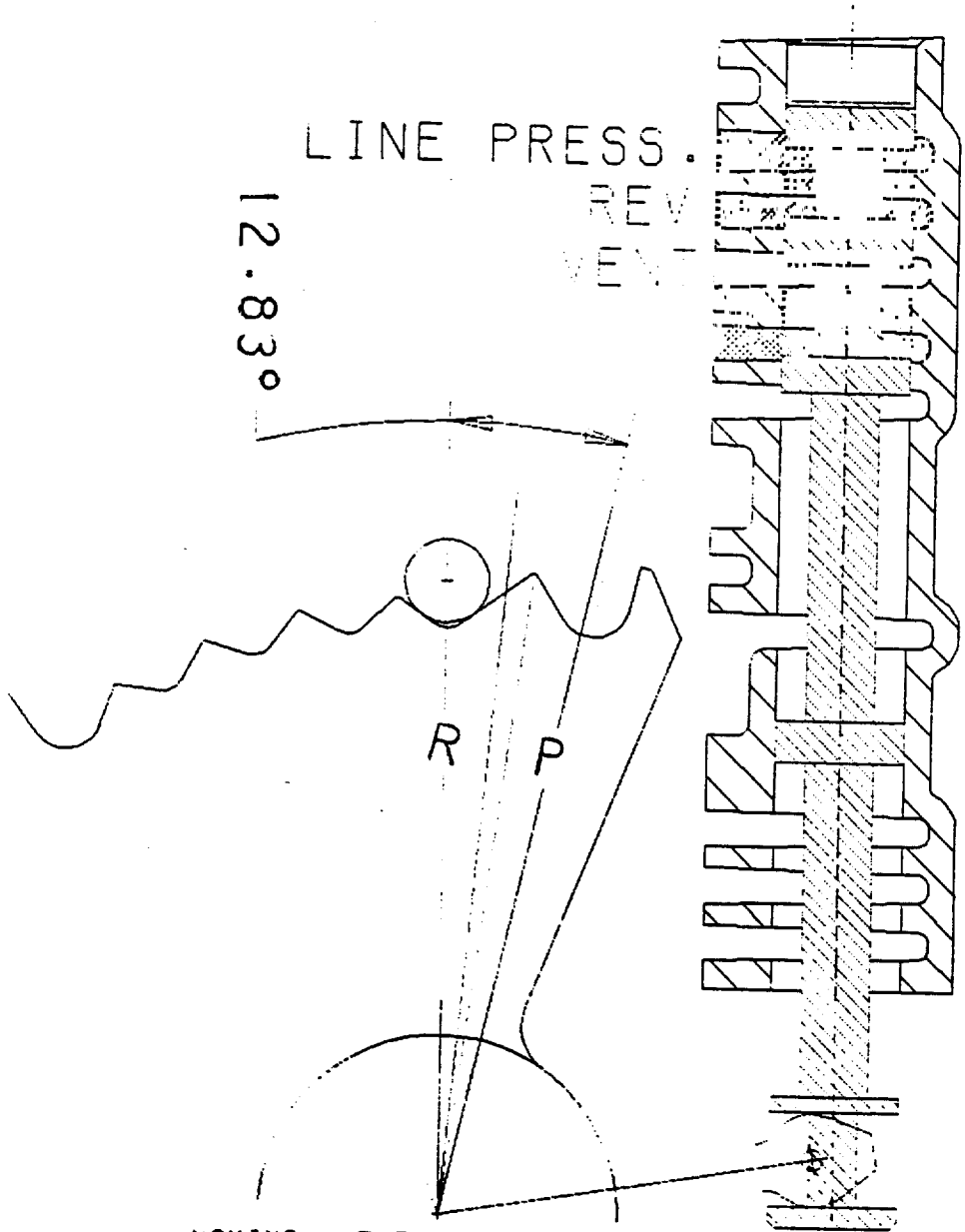

NOMINAL LEVER AND ROLLER

DEG.	POS.	MANUAL VALVE	VENT
12.83°	R	FULL OPEN	FULL CLOSED
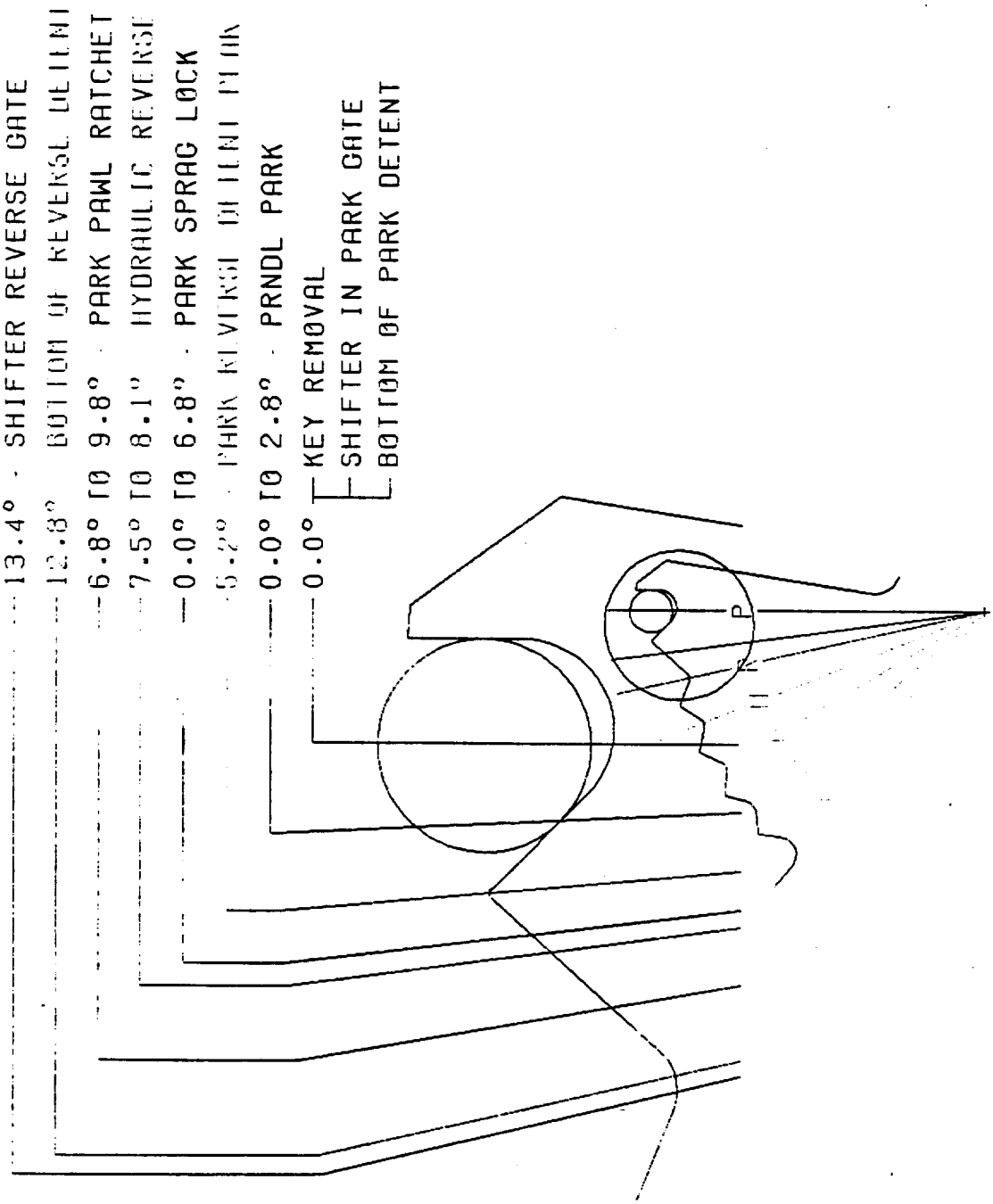
Figure 7. Reverse to Park shift events corresponding to angular position of detent roller in rooster comb.