VRTC-DCD9006
EA99-013

Summary of the Crash Test Program Concerning Fuel System Integrity of 1996-2000 Chrysler Minivans

VEHICLE RESEARCH AND TEST CENTER
EAST LIBERTY, OHIO 43319

FINAL REPORT
MARCH 2001

U. S. Department of Transportation
National Highway Traffic Safety Administration

Technical Report Documentation Page

1. Report No.	2. Government Accession No.	3. Recipients's Catalog No. EA99-013
4. Title and Subtitle Summary of the Crash Test Program Concerning Fuel System Integrity of 1996-2000 Chrysler Minivans		5. Report Date March 2001 6. Performing Organization Code NRD-23
7. Author(s) R. Kirkbride		8. Performing Organization Report No. VRTC-DCD9006
9. Performing Organization Name and Address National Highway Traffic Safety Administration Vehicle Research and Test Center P.O. Box B-37 East Liberty, OH 43319		10. Work Unit No. (TRAIS)n code 11. Contract of Grant No.
12. Sponsoring Agency Name and Address National Highway Traffic Safety Administration 400 Seventh Street, S.W. Washington, DC 20590		13. Type of Report and Period Covered FINAL 08/00-03/01 14. Sponsoring Agency Code

15. Supplementary Notes

16. Abstract

This test program was performed to evaluate the fuel system integrity of 1996-2000 Chrysler minivans, especially of the fuel filler hose assembly, in certain side-impact crashes, and to ascertain the risk of occupant impact injury in those crashes, based on the responses of instrumented dummies. The vehicle-to-vehicle crash test performed was a 90 degree left-side impact and the procedures outlined in FMVSS No. 214, "Side Impact Protection" were used as a guideline. The struck test vehicle was a new 2000 Chrysler Voyager. The nominal impact speed of the striking vehicle, a 1996 Dodge Dakota, was 30 mph.

The results showed:

1) No Stoddard fluid loss was noted during the side impact or static rollover tests.

2) The maximum TTI reading was 63 (upper limit of 85) and the peak lateral acceleration of the pelvis was 90 g's (upper limit of 130 g's), both on the driver dummy.

3) The maximum dummy HIC readings and peak neck loads were high because the heads of the passenger and driver dummies collided about 119 msec after the Voyager was struck.

17. Key Words	18. Distribution Statement
Fuel System Integrity Chrysler Minivans Crash Test	Document is available to the public through the National Technical Information Service, Springfield, VA 22161

19. Security Classif. (of this report)	20. Security Classif. (of this page)	21. No of Pages	22. Price
Unclassified	Unclassified	13	

Form DOT F1700.7 (8-72) **Reproduction of completed page authorized**

TABLE OF CONTENTS

Section	Page
Technical Report Documentation Page	i
List of Figures	iii
List of Tables	iv
1.0 INTRODUCTION	1
2.0 DISCUSSION	1
2.1 Test Vehicles	1
2.2 Test Equipment	2
2.3 Test Procedures	4
3.0 TEST RESULTS	7
4.0 FINDINGS	8

LIST OF FIGURES

Figure **Page**

2.1 Sketch of Test Setup for 90° Side-Impact Test on a 2000 Chrysler Voyager 6

LIST OF TABLES

Table **Page**

3.1 Summary of Test Results for Vehicles 7

3.2 Summary of Test Results for Test Dummies in Voyager 7

1.0 INTRODUCTION

This test program was performed at the Vehicle Research and Test Center (VRTC) in response to a request by the Office of Defects Investigation (ODI), National Highway Traffic Safety Administration (NHTSA). The ODI requested a full-scale crash test to evaluate complaints concerning the fuel system integrity of 1996-2000 Chrysler minivans, especially during certain side-impact crashes.

2.0 DISCUSSION

The objective of the test program was to evaluate the fuel system integrity of 1996-2000 Chrysler minivans, especially of the fuel filler hose assembly, in certain side-impact crashes and to ascertain the risk of occupant impact injury in those crashes based on the responses of instrumented dummies.

The vehicle-to-vehicle crash test performed was a 90° left-side impact. The target or struck test vehicle was a new 2000 Chrysler Voyager. The nominal impact speed of the bullet or striking vehicle, a 1996 Dodge Dakota, was 30 mph.

2.1 Test Vehicles

Both test vehicles were purchased locally and inspected at VRTC prior to delivery to the Transportation Research Center (TRC) for the side-impact test.

The striking vehicle, a 1996 Dodge Dakota SLT pickup truck, was in very good condition and was tested "as received" except for the tires. The "as received" non-standard tires were replaced with tires recommended by the manufacturer prior to delivery of this vehicle to TRC for impact testing. The Vehicle Identification Number (VIN) of the Dakota was 1B7GL23X8TS686940 (Built 3/1996) and the odometer reading was approximately 47,000 miles. This bullet vehicle was selected as a

typical medium-size pickup truck with popular options such as club cab, six-cylinder engine (3.9 L), automatic transmission, and 2-wheel drive. The bullet vehicle was also selected based on its weight which is comparable to the weight (4,000 lb) of the moving contoured barrier described in Federal Motor Vehicle Standard (FMVSS) No. 301, "Fuel System Integrity".

The target test vehicle, a 2000 Chrysler Voyager minivan, was in new condition. The VIN was 2C4FJ25BXYR783391 (Built 3/2000) and the odometer reading was approximately 100 miles. The ODI requested that the target vehicle be selected from 1996-2000 Chrysler minivans with the standard wheelbase (113 inches) and single sliding side door. A 2000 model was purchased to avoid used models with possible modifications to the fuel system or previous accident damage. Other options on the target vehicle, such as the four-cylinder engine (2.4 L) and the automatic transmission, were not considered to be critical factors.

Additional vehicle data may also be found in the comprehensive test report prepared by the TRC and identified as: Watters, V.L., "1996 Dodge Dakota Pickup into Left Side of a 2000 Chrysler Voyager", Final Report No. TRC 001026, February 2000.

2.2 Test Equipment

Prior to delivery of the Dakota pickup truck to TRC for impact testing, a series of tests was conducted by VRTC to determine the pitch attitude of this bullet vehicle during heavy braking. The instrumentation included a U-tube manometer (Ammco Model 7350) to measure vehicle deceleration and ultrasonic sensors (Massa Model 4000) to measure the change in height of the front and rear bumpers of the Dakota during the "panic" braking tests.

Detailed descriptions of the instrumentation for the crash test may be found in the comprehensive test report prepared by TRC. High-speed motion picture cameras were used to document the crash test. Four 50th-percentile adult male dummies were used. Two of these, provided by TRC, were

uninstrumented Hybrid II Dummies (Part 572B) used for ballast in the driver and front passenger seats of the Dakota bullet vehicle.

Each of the other two test dummies (Part 572M) consisted of the torso of a Side-Impact Dummy (SID or Part 572F; provided by TRC) and the head and neck of a Hybrid III Dummy (Part 572E; provided by NHTSA). These instrumented dummies (SID-H3) were used in the driver and front passenger locations in the Voyager target vehicle. To evaluate the risk of occupant impact injury, dummy instrumentation included accelerometers on the head, spine, pelvis, and ribs, plus upper neck load cells and chest-displacement transducers. NHTSA provided the upper neck load cells and the accelerometers for the two Hybrid III heads and necks to TRC for use on their SID torsos. TRC provided the accelerometers for the vehicles and SID torsos.

A full calibration of each SID-H3 and all accelerometers and other test dummy instrumentation was performed prior to the crash test. The calibration of the SID-H3 included lateral tests on the head, neck, thorax, pelvis, and thoracic shock absorber. The TRC calibration reports are appended to the comprehensive test report prepared by TRC.

The accelerometers used on the Dakota bullet test vehicle included tri-axial accelerometers mounted on the floor at the vehicle center-of-gravity (CG) and longitudinal (x-axis) accelerometers on the door sills by the left and right rear seat cross-members. The accelerometers used on the target test vehicle (90° left-side impact) included tri-axial accelerometers mounted on the floor at the vehicle CG, at the right-side sill by the front and rear seats, and at the rear floorpan above the rear axle.

Eight high-speed (nominally 1,000 frames/sec) motion picture cameras and a panning camera (24 frames/sec) were used to document the crash test. Detailed descriptions of the instrumentation for the crash test may be found in the comprehensive test report by TRC.

2.3 Test Procedures

Prior to the crash testing, a series of tests was conducted by VRTC to determine the pitch attitude of the bullet vehicle during heavy braking. The "pitch" tests on the Dakota were conducted on a level dry surface (skid pad). The vehicle was driven up to 40 mph and then braked at various deceleration levels up to the point of wheel lockup. Three stops were made at each deceleration level (U-tube manometer) while measuring the change in height (ultrasonic sensors) of the front and rear bumpers of the Dakota. The maximum pitch attitude measured just prior to wheel lockup was used to simulate pre-impact braking of the bullet vehicle during the crash test.

During test vehicle preparation at TRC, the pre-test attitudes of the striking vehicle were adjusted (front springs were compressed and rear springs were blocked in an extended position) to simulate this heavy-braking attitude. Based on the previous "pitch" tests on the Dakota, the front was lowered 2.5 inches and the rear raised 1.2 inches as measured at the front and rear bumper centerlines.

Both test vehicles were placed on a level surface and the engine fuel pump was operated until it stopped pumping fuel, i.e., the tank "ran dry." Each tank was then filled to the "usable capacity" with Stoddard solvent using a metal funnel with a flexible tube attached to fit in the filler neck and a one-gallon pitcher (graduated in one-pint intervals). The tank's "usable capacity" (as defined in 49 CFR 571.3), as specified by the manufacturer, was supplied by ODI. The usable fuel capacities of the Dakota and Voyager were specified as 15 gal and 20 gal respectively. Each vehicle was weighed in order to determine the appropriate vehicle test weight. After obtaining the "delivered" vehicle test weights, seven percent of the fluid that had been added was removed.

The Dakota was loaded to a test weight of 4,168 lb, using the procedures outlined in FMVSS No. 208, "Occupant Crash Protection," as a guideline. The Voyager was loaded to a test weight of 4,079 lb, using the procedures outlined in FMVSS No. 214, "Side Impact Protection," as a guideline.

Only ballast dummies were used in the front seats (nominal seat back angle) of the Dakota. The instrumented dummies (SID-H3) in the Voyager were positioned in the driver and front passenger seating positions using the dummy placement procedure specified for FMVSS No. 214, "Side Impact Protection," as a guideline. Accelerometers were added to both vehicles to measure specified longitudinal, lateral, and vertical accelerations.

The moving 1996 Dodge Dakota was used to impact the stationary 2000 Chrysler Voyager on the left (driver's) side. The crash test was a 90° side-impact and the nominal impact speed of the striking vehicle was 30 mph. The impact point was near the fuel filler neck. The right edge of the Dakota front bumper was aligned near the centerline of fuel tank spud where the filler hose is attached. Dummy response data, fuel leakage measurements, and films of the tests were obtained. Static rollover tests were conducted under the test conditions specified in FMVSS No. 301, "Fuel System Integrity," after the impact test.

A sketch of the test setup for this crash test (excerpted from TRC report page showing camera positions) is shown in Figure 2.1

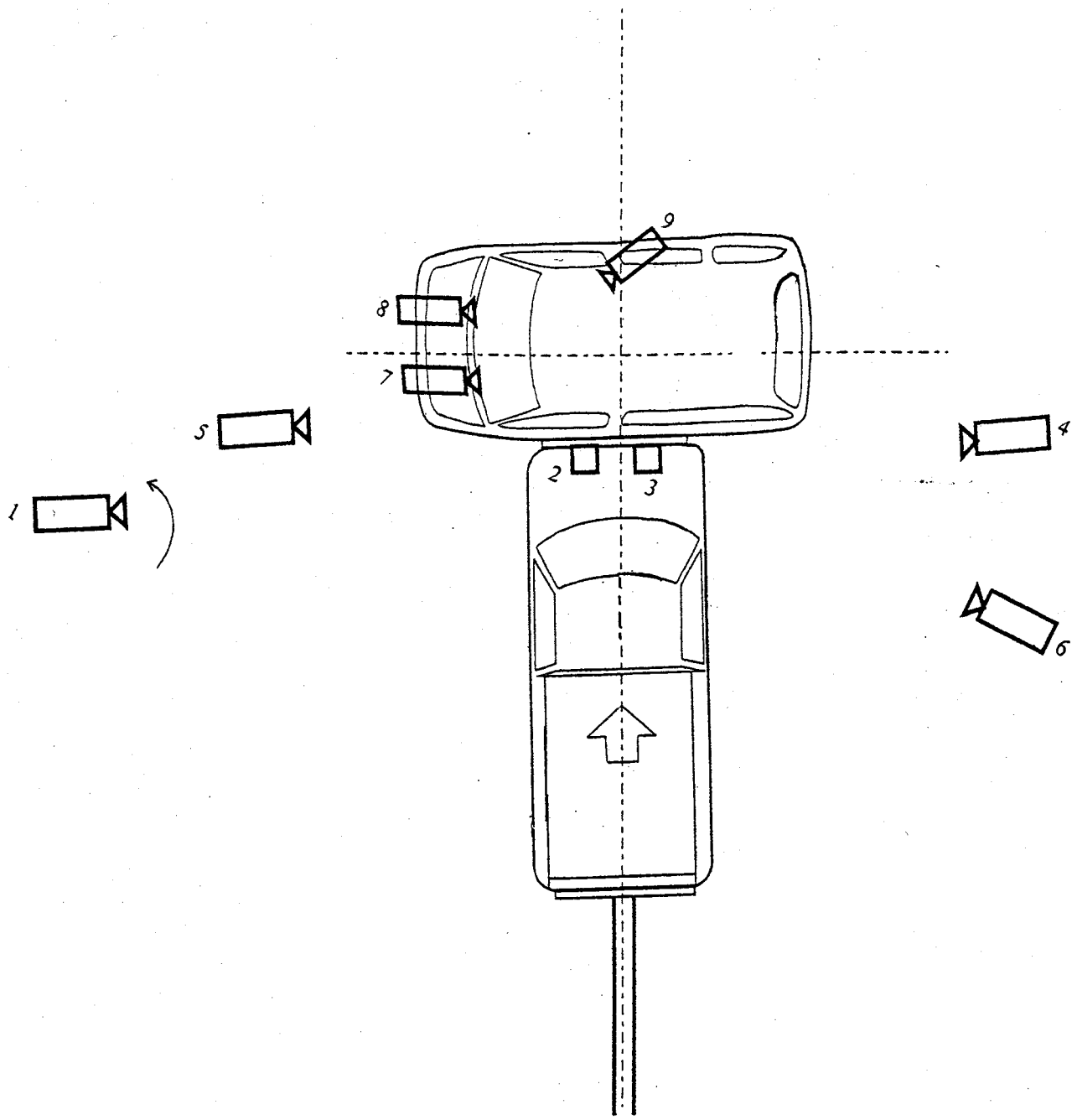

Figure 2.1 – Sketch of Test Setup for 90° Side Impact Test on a 2000 Chrysler Voyager

Note: 2, 3 were overhead cameras

3.0 TEST RESULTS

A summary of the test results for the vehicle performance during the crash test is presented in Table 3.1. The "Velocity Change" shown in the table was calculated from the vehicle test weights and impact speed. No Stoddard fluid loss was noted during the side impact or during the subsequent static rollover test. Although crash damage to the side of the Voyager was extensive, damage to the front of the Dakota was relatively light and the air bags in the Dakota did not deploy. Detailed test results and data plots can be found in the comprehensive test report prepared by the TRC.

Table 3.1 -- Summary of Test Results for Vehicles

2000 Chrysler Voyager Test Weight (lb)	1996 Dodge Dakota Test Weight (lb)	Impact Speed of the Dakota (mph)	Velocity Change (mph)	Voyager Fuel Tank Test Volume (gal)	Fluid Leakage
4079	4168	30.13	15.2	18.6	None
Max. g's at Vehicle CGs		Dakota (x-axis) = 14.1		Voyager (y-axis) = 17.1	
Note: Test No. 001026 was a 90° impact on the driver's side of a stationary Voyager.					

A summary of the major test results for the performance of the instrumented test dummies (SID-H3) in the Voyager during the crash test is presented in Table 3.2.

Table 3. 2 -- Summary of Test Results for Test Dummies in Voyager

SID-H3 Seating Position	TTI	Pelvis Y-max (g's)	HIC	Peak Neck Loads (N)	
				Tension	Compression
Injury Criteria	85	130	700 (15 msec)	4,170	4,000
Driver	62	90	786* (338)	3,302* (712)	736
Right Front Passenger	26	23	921*	1,102	4,390* (0)

Note: Test No. 001026 was a 90° impact by a Dakota on the driver's side of a stationary Voyager.
* - These HICs and peak neck loads resulted from the collision of the driver and passenger SID-H3 heads at approximately 119 msec; numbers in parentheses were measured just prior to collision of dummy heads.

The risk of occupant impact injury was primarily based on Thoracic Trauma Index (TTI), which NHTSA uses as a measure of the risk of thoracic injury. A TTI of 85 is used as an upper limit for 4-door passenger cars and multi-purpose vehicles (MPVs) for the dynamic performance requirement in FMVSS No. 214. The dummy TTI readings never exceeded 85, with a maximum TTI of 62 (driver dummy). The peak lateral (Y-axis) acceleration of the pelvis, which has an upper limit of 130 g's, was 90 g's (driver dummy).

Also, Head Injury Criterion (HIC) was calculated and peak neck loads were measured. HIC has an upper limit of 700 (evaluated over a maximum interval of 15 msec) and peak neck loads have upper limits of 4,170 N (tension) and 4,000 N (compression), based on the advanced air bag upgrade to FMVSS No. 208 tests (30-mph frontal fixed-barrier impact). Although neither HIC nor neck injury criteria are listed for FMVSS No. 214 (side impacts), they are discussed here for comparative purposes.

Both of the HIC readings exceeded 700 because the heads of the passenger and driver dummies collided about 119 msec after the Voyager was struck. The HIC for the driver dummy was only 338 when recalculated during the interval prior to the heads of the dummies striking together.

The peak neck loads were also affected by the heads of the dummies striking together at about 119 msec after the Voyager was struck. For instance, the peak neck load (tension) of the driver dummy (3,302 N at 120 msec) was 712 N during the interval prior to the heads of the dummies striking together. The peak neck load (compression) of the passenger dummy (4,390 N at 121 msec) was essentially zero during the interval prior to the heads of the dummies striking together.

4.0 FINDINGS

The following findings are based on the results of the 90° side-impact crash test on a 2000 Chrysler minivan:

1) No Stoddard fluid loss was noted during the side impact or static rollover tests.

2) The maximum TTI reading was 62 (upper limit of 85) and the peak lateral acceleration of the pelvis was 90 g's (upper limit of 130 g's), both on the driver dummy.

3) The maximum dummy HIC readings and peak neck loads were high because the heads of the passenger and driver dummies collided about 119 msec after the Voyager was struck.