Bulletin No.: 13434
Date: April 2014

Program Bulletin

SB-10055837-3506

CUSTOMER SATISFACTION PROGRAM

SUBJECT: **Air Conditioning System Inoperative or Cools Intermittently**

MODELS: **2013-2014 Chevrolet Spark**

THIS PROGRAM IS IN EFFECT UNTIL APRIL 30, 2016.

CONDITION

Certain 2013-2014 model year Chevrolet Spark vehicles may have a condition where the air conditioning (A/C) system does not work or cools intermittently due to inaccurate control of the evaporator temperature sensor.

CORRECTION

Dealers are to inspect and, if necessary, replace the A/C compressor. Dealers are to also, if necessary, replace the Evaporative Air Temperature (EAT) Sensor, install a low pressure switch adaptor kit, and reprogram the Body Control Module.

VEHICLES INVOLVED

All involved vehicles are identified by Vehicle Identification Number on the Investigate Vehicle History screen in GM Global Warranty Management system. Dealership service personnel should always check this site to confirm vehicle involvement prior to beginning any required inspections and/or repairs. It is important to routinely use this tool to verify eligibility because not all similar vehicles may be involved regardless of description or option content.

For dealers with involved vehicles, a listing with involved vehicles containing the complete vehicle identification number, customer name, and address information has been prepared and will be provided to dealers through the GM GlobalConnect Recall Reports. Dealers will not have a report available if they have no involved vehicles currently assigned.

The listing may contain customer names and addresses obtained from Motor Vehicle Registration Records. The use of such motor vehicle registration data for any purpose other than follow-up necessary to complete this program is a violation of law in several states/provinces/countries. Accordingly, you are urged to limit the use of this report to the follow-up necessary to complete this program.

Copyright 2014 General Motors. All Rights Reserved.

PART INFORMATION

Parts required to complete this program are to be obtained from General Motors Customer Care and Aftersales (GMCC&A). Please refer to your “involved vehicles listing” before ordering parts. Normal orders should be placed on a DRO = Daily Replenishment Order. In an emergency situation, parts should be ordered on a CSO = Customer Special Order.

Note: Very few A/C compressors are expected to require replacement. If inspection determines replacement is necessary, obtain parts from GMCC&A. Do not order A/C compressors for shelf stock.

Part Number	Description	Quantity/Vehicle
95442733	FILTER, A/C REFRIG	1 (if req'd)
94780910	HARNESS PKG, ACSRY WRG	1 (if req'd)

SERVICE PROCEDURE

A/C Refrigerant Filter Kit

3782696

Wiring Harness Kit

3782704

3782709

3782711

Is the A/C system operating normally? (Confirm at idle using the SI A/C Performance Specs)

- Follow the breakpoint dates below for pressure switch, wiring harness, and BCM software update.

If the A/C system is not working (Due to compressor failure, validate failure is not leak related)

- Replace the A/C compressor
- Follow the breakpoint dates below for pressure switch, wiring harness and BCM software update.

Breakpoints

Note: Inspect Investigate Vehicle History in Global Warranty Management (GWM) system for the below labor codes.

Bulletin Number	Associated Labor Code	Comments
PI1103	4480068	If not performed, use labor code in this bulletin for submission
PI1121	4480108	If not performed, use labor code in this bulletin for submission

For vehicles built prior to November 22, 2012

- Check to see if PI1013 (EAT sensor and cam link) was performed. If not, install the parts as per PI1013 before next step.
- If PI1121 (A/C hoses with pressure switch/wiring harness attached) has already been installed, no further action needed. Submit warranty transaction using appropriate labor code found in this bulletin.
- If PI1121 (A/C hoses with pressure switch/wiring harness attached) has not been installed, install the new refrigerant filter w/pressure switch and wiring harness. No BCM software update needed. Proceed to *A/C Compressor Checking Procedure* below.

For vehicles built after November 21, 2012

- If PI1121 (A/C hoses with pressure switch/wiring harness attached) has already been installed, update the BCM software only, use the new calibration in TIS2Web. No further action needed. Submit warranty transaction using appropriate labor code found in this bulletin.
- If PI1121 (A/C hoses with pressure switch/wiring harness attached) has not been installed, install the new refrigerant filter w/pressure switch, wiring harness and update the BCM software with the new calibration in TIS2Web. Proceed to *A/C Compressor Checking Procedure* below.

A/C Compressor Checking Procedure

Note : The A/C compressor will not operate properly in cold outside air temperatures.

Note: To perform the A/C compressor check the vehicle must be in 59-95F/15-35℃ ambient temperature or indoor.

1. Install the A/C charging equipment to the A/C hose service ports (High & Low).
2. Start the engine and operate the A/C system as indicated below.
   - A/C (On), Fan Speed (Max), Temperature (Full Cold), Recirculation Mode (On), Air Delivery (Vent), Window Open.

3. After 3 minutes of idle, check the LP (Low Side Pressure) & HP (High Side Pressure) on the A/C Charging Equipment.
   - Check pressure at idle.
   - Is the A/C LP over 450 kPa (65 psi) **or** the difference between HP and LP under 350 kPa (51 psi)?
     - **If no** - Install the low pressure switch kit, wiring harness and reprogram BCM as per the above breakpoints.
     - **If yes** - Replace the A/C compressor, install the low pressure switch kit, wiring harness, and reprogram the BCM as per above breakpoints.

A/C Lower Pressure Switch Installation

1. Recover the A/C charge. (Refer to Refrigerant Recovery and Recharging in SI).
2. Remove the battery negative cable.

3782715

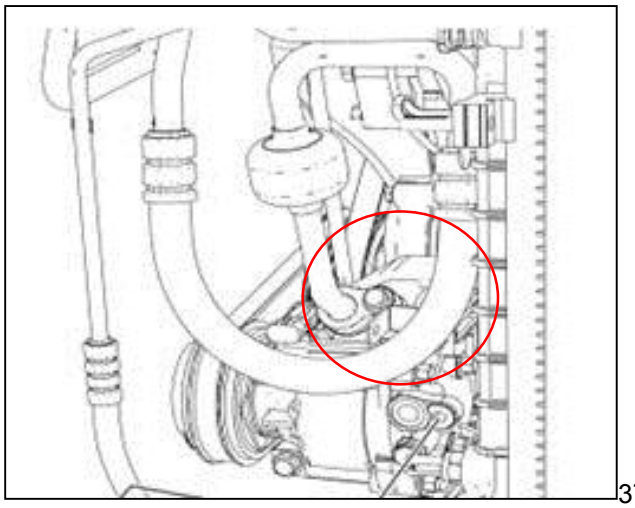

3782917

3. Remove the A/C evaporator hose assembly bolt.
4. If necessary to replace the A/C compressor according to result of compressor checking procedure, replace the A/C compressor.(Refer to A/C Compressor Replacement in SI)

3782696

3782927

3782935

5. Install the A/C Refrigerant Filter between A/C compressor and evaporator hose with both seals, as shown above. **Tighten bolt to 22 N·m (16 lb ft)**.

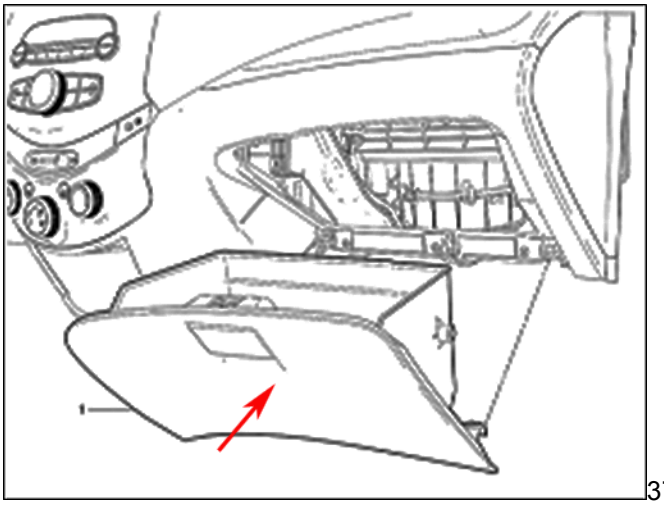
3782938

6. Remove the glove box assembly.

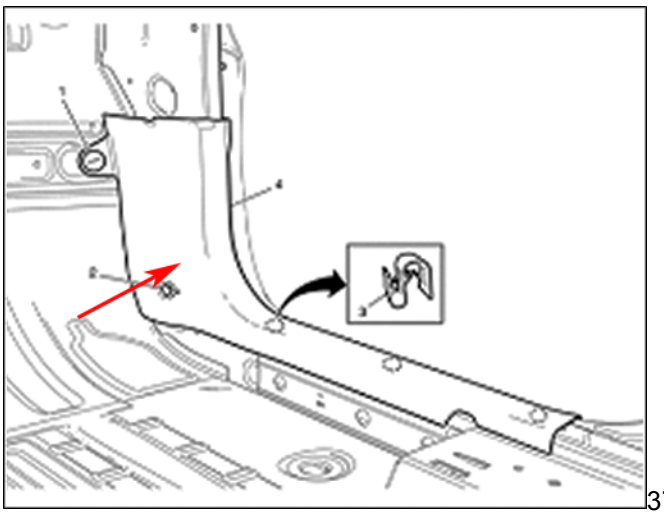
3782940

7. Remove the front side door sill trim plate.

3653899

3653901

(1) Inline Body Connector
(2) IP Connector

8. Under the dash, disconnect the inline body connector and IP connector from the harness and disconnect the washer hose.

3655568

9. Remove the harness clip shown below.

3650563

10. Locate the harness grommet under the hood and remove from the opening. Pull through the harness and connectors from the interior of the vehicle.

Note: DO NOT pull the harness through opening by the grommet.

3654455

11. Remove the tape from the harness at the grommet and slide down past the conduit.

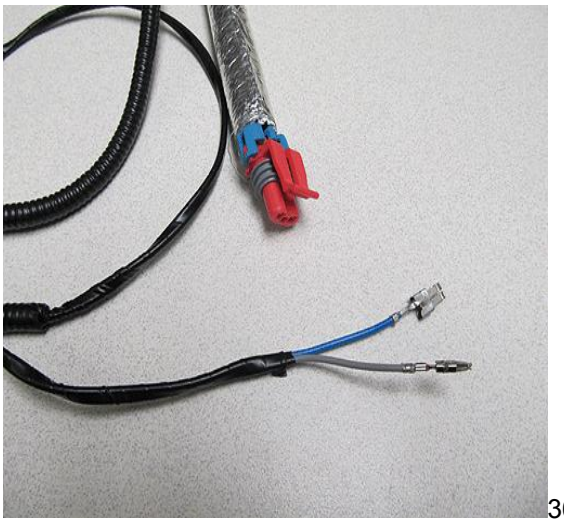
3654012

12. With the new supplied harness with the connector shown above, insert the harness with terminal ends through the center of the grommet and pull through up to the conduit.

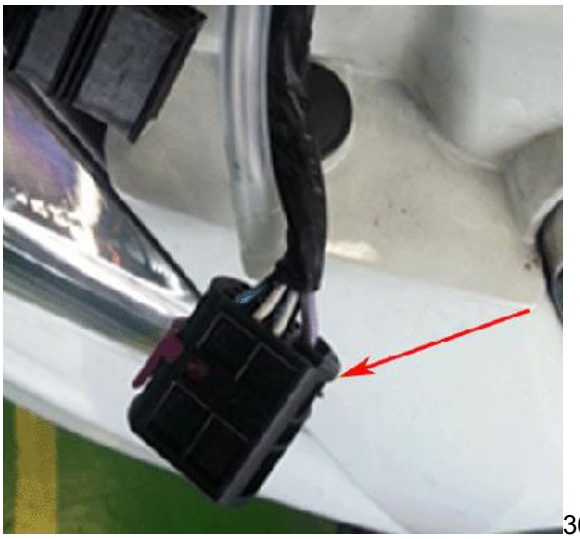
3653892

3653894

13. Insert the terminals into IP in-line connector. Refer to the pictures above.

3653917

14. Insert the wiring harness back through the I/P opening and install the grommet.
15. Position the grommet back to its original position and tape the harness to the grommet.
16. Insert the wiring harness back through the I/P opening and install the grommet.

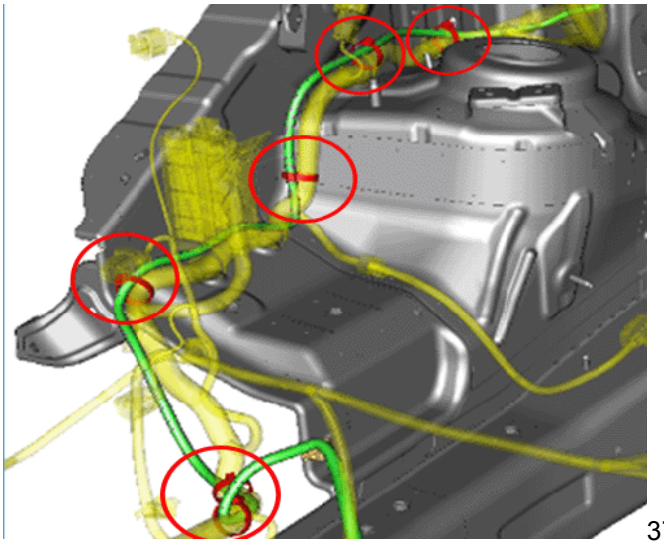
3782943

17. Route the new harness along the FWD wiring harness and attach with tie straps as shown.

3782945

18. Connect the connector to the Low Presser Switch and attach the new harness with C-clips to the A/C pipe.

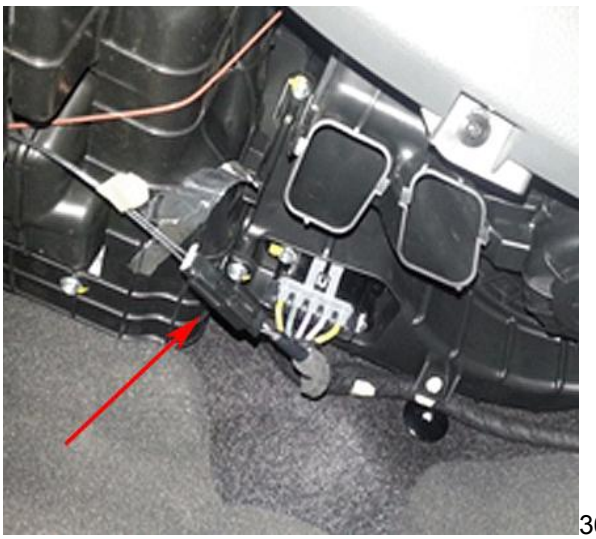
3654460

19. Inside the vehicle, disconnect the EVAP TEMP sensor connector.

3654138

20. With the second part of the new harness kit, install the pigtail connector to the EVAP TEMP sensor connector.

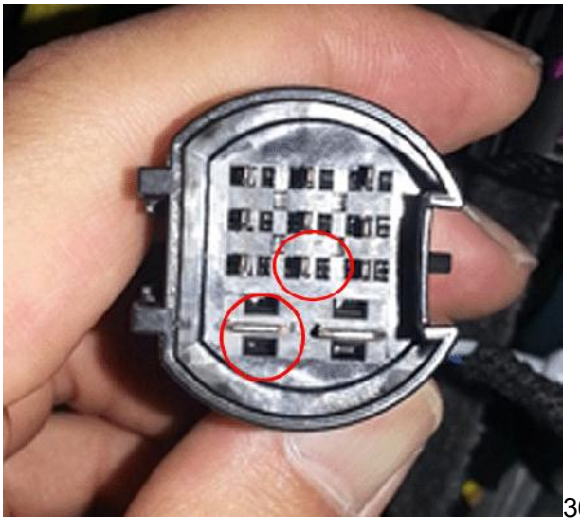
3653909

21. Install the terminals into the FWD in-line connector as shown above.

3653906

22. Wrap sponge tape around the EVAP TEMP connector as shown above.
23. Connect the remaining harness connectors and washer hose and install harness clip.
24. Install the front side door sill trim plate. Refer to Front Side Door Sill Trim Plate Replacement.

3650599

25. Route the wires along the A/C system wiring harness under the HVAC module assembly and attach with four evenly spaced zip ties.

3650597

26. Secure the wiring harness with tie straps to secure in place.
27. Route the wire harness on the side of the brake pressure modulator and with five or six evenly spaced zip ties attach to the factory installed harness.
28. Recheck the A/C pressures. At 3 minutes of idle, check the LP (Low Side Pressure) & HP (High Side Pressure) using the A/C Charging Equipment according to “A/C Compressor Checking Procedure”.
    - Check pressure at idle.
    - Is the A/C LP over 450 kPa (65 psi) or the difference between HP and LP under 350 kPa (51 psi)?
        - If No - normal condition.
        - If Yes – Refer to SI for diagnostics.

29. Only update the BCM software with the current calibration in TIS2Web using the VIN breakpoints.

(Refer to Body Control Module Programming and Setup in SI)

- The BCM software will be automatically chosen with new part numbers in TIS2Web.

COURTESY TRANSPORTATION

The General Motors Courtesy Transportation program is intended to minimize customer inconvenience when a vehicle requires a repair that is covered by the New Vehicle Limited Warranties. The availability of courtesy transportation to customers whose vehicles are within the warranty coverage period and involved in a product program is very important in maintaining customer satisfaction. Dealers are to ensure that these customers understand that shuttle service or some other form of courtesy transportation is available and will be provided at no charge. Dealers should refer to the General Motors Service Policies and Procedures Manual for Courtesy Transportation guidelines.

WARRANTY TRANSACTION INFORMATION

Submit a transaction using the table below. All transactions should be submitted as a ZFAT transaction type, unless noted otherwise.

Labor Code	Description	Labor Time
For Vehicles Built PRIOR to November 22, 2012		
9100475	A/C System Operating Properly & PI's Already Completed – No Further Action Req'd	0.2
9100417	Replace EAT Sensor & Cam Link	0.4
9100418	Install Low Pressure S/W Kit & Wiring Harness	1.0*
9100419	Replace EAT Sensor, Cam Link, & Install Low Pressure S/W Kit	1.4*
9100420	Replace A/C Compressor, EAT Sensor, Cam Link, & Install Low Pressure S/W Kit	2.0*
For Vehicles Built AFTER November 21, 2012		
9100421	Reprogram BCM	0.5
9100373	Install Low Pressure S/W Kit and Reprogram BCM	1.5*
9100374	Replace A/C Compressor, Install Low Pressure S/W Kit, Wiring Harness, & Reprogram BCM	2.1*

* Includes evacuation/recharging the A/C system.

CUSTOMER NOTIFICATION

General Motors will notify customers of this program on their vehicle (see copy of customer letter included with this bulletin).

DEALER PROGRAM RESPONSIBILITY

All unsold new vehicles in dealers' possession and subject to this program must be held and inspected/repaired per the service procedure of this program bulletin before customers take possession of these vehicles.

Dealers are to service all vehicles subject to this program at no charge to customers, regardless of mileage, age of vehicle, or ownership, through April 30, 2016.

Customers who have recently purchased vehicles sold from your vehicle inventory, and for which there is no customer information indicated on the involved vehicle listing, are to be contacted by the dealer. Arrangements are to be made to make the required correction according to the instructions contained in this bulletin. A copy of the customer letter is provided in this bulletin for your use in contacting customers. Program follow-up cards should not be used for this purpose, since the customer may not as yet have received the notification letter.

In summary, whenever a vehicle subject to this program enters your vehicle inventory, or is in your facility for service through April 30, 2016, you must take the steps necessary to be sure the program correction has been made before selling or releasing the vehicle.

GM bulletins are intended for use by professional technicians, NOT a "do-it-yourselfer". They are written to inform these technicians of conditions that may occur on some vehicles, or to provide information that could assist in the proper service of a vehicle. Properly trained technicians have the tools, equipment, safety instructions, and know-how to do a job properly and safely. If a condition is described, DO NOT assume that the bulletin applies to your vehicle, or that your vehicle will have that condition. See your dealer for information on whether your vehicle may benefit from the information.

We Support Voluntary Technician Certification

April 2014

Dear General Motors Customer:

We have learned that your 2013-2014 model year Chevrolet Spark vehicle may have a condition where the air conditioning (A/C) system does not work or cools intermittently due to inaccurate control of the evaporator temperature sensor.

Your satisfaction with your Chevrolet Spark is very important to us, so we are announcing a program to prevent this condition or, if it has occurred, to fix it.

What We Will Do: Your GM dealer will inspect and, if necessary, replace the A/C compressor. Your dealer will also, if necessary, replace the Evaporative Air Temperature (EAT) Sensor, install a low pressure switch adaptor kit, and reprogram the Body Control Module. This service will be performed for you at **no charge until April 30, 2016**. After that, any applicable warranty will apply.

What You Should Do: To limit any possible inconvenience, we recommend that you contact your dealer as soon as possible to schedule an appointment for this repair. By scheduling an appointment, your dealer can ensure that the necessary parts will be available on your scheduled appointment date.

If you have any questions or concerns that your dealer is unable to resolve, please contact the appropriate Customer Assistance Center at the number listed below.

Division	Number	Text Telephones (TTY)
Chevrolet	1-800-222-1020	1-800-833-2438
Guam	65-6267-1752	
Puerto Rico – English	1-800-496-9992	
Puerto Rico – Español	1-800-496-9993	
Virgin Islands	1-800-496-9994	

We sincerely regret any inconvenience or concern that this situation may cause you. We want you to know that we will do our best, throughout your ownership experience, to ensure that your Chevrolet Spark provides you many miles of enjoyable driving.

Jim Moloney
General Director,
Customer and Relationship Services

13434