Ditch Witch

Publication Number: 052-955

Publication Date: February 2003

Safety Notice

Affected Models	**S7B and T9S with hydraulic brakes**
Attention	Owners, Managers, Parts and Service Managers
Description	Please see the attached customer notice.
Parts Required	n/a
Estimated Repair Time	3 hours
Compensation	mileage (up to the maximum allowable) and 3 hours labor
Dealership Notes	A notification will be mailed to owners of affected models. A list of units in your area is included. Please note the "What You Should Do" section of the attached customer copy. If you have any questions, contact the Trencher Product Support Group.

RECEIVED
NVS-215
2003 FEB 24 A 11: 24
OFFICE OF
DEFECTS INVESTIGATION

Ditch Witch

Publication Number: 061-355

Publication Date: February 2003

RECEIVED
NVS-215
2003 FEB 24 A 11: 24
OFFICE OF
DEFECTS INVESTIGATION

INSTRUCTIONS

Adjust & Bleed Hydraulic Brakes

S7B & T9S Trailers

Estimated Time: 3 hours

Before You Start

Read instructions thoroughly before beginning procedure.

Purpose of Instructions

These instructions are used to bleed and adjust hydraulic brakes on the S7B & T9S trailers. Use reference tables to identify parts correctly. Use parts manual to correctly identify parts that may not be represented in drawings.

Hydraulic Brake System

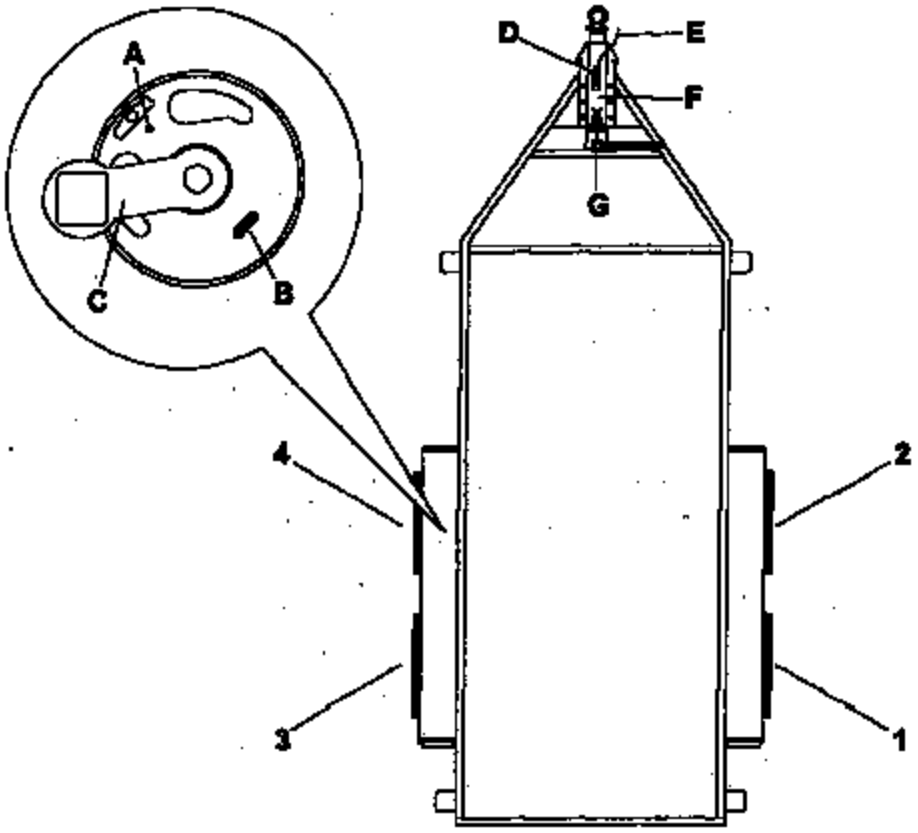

Ref.	Description
A	bleed screw
B	adjustment slot
C	torsion arm
D	breakaway lever

Ref.	Description
E	breakaway cable
F	actuator (master cylinder)
G	brake fluid filler cap
1-4	brake bleeding sequence

Adjust Trailer Brakes

1. Park tow vehicle and trailer on level surface.
2. Set parking brake and chock wheels of tow vehicle.
3. Ensure that tanks are empty.
4. Use a jack and suitable jack stands to raise wheels so that wheels can be rotated by hand.
5. Rotate wheel forward by hand to reposition free backing primary brake shoe.
6. Remove adjusting plug from backing plate at wheel.
7. Use a slender screwdriver or similar tool to push the adjuster screw spring (1) away from the adjuster assembly.
8. At the same time, use a brake adjusting tool to tighten adjuster assembly (2). Adjust until brake linings become tight enough that wheel cannot be turned by hand, then back off 11 clicks for brakes that have not been used, and 15 clicks for brakes already burnished in.

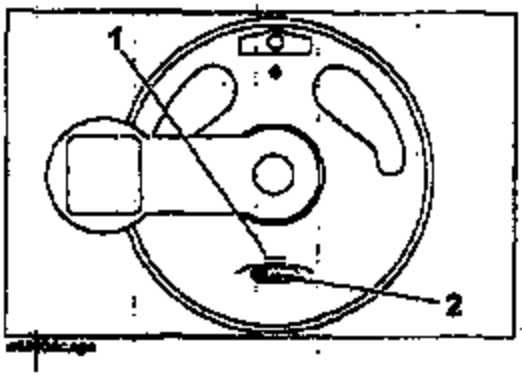

9. Rotate wheel forward by hand. Wheel should rotate freely.

10. Replace adjusting plug in backing plate.
11. Repeat adjustment procedure at each wheel. To ensure even braking, make sure that all wheels have approximately the same amount of drag.

Prepare Trailer

1. Ensure that tow vehicle and trailer are parked on a level surface.
2. Position wooden block in front of trailer wheel to be raised. Raise one wheel at a time.
3. Pull tow vehicle forward so that trailer wheel is centered on top of wooden block to load side.

4. A minimum thickness of 3.5 in (90 mm) is required for wooden block (A).

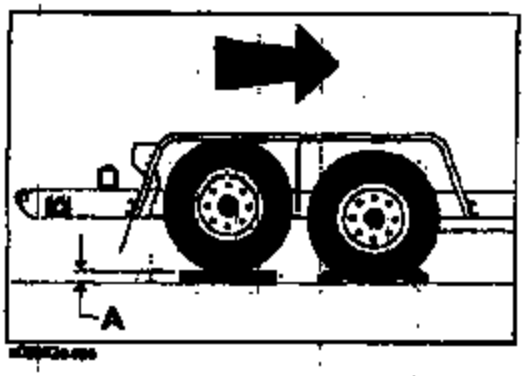

Adjust & Bleed Hydraulic Brakes

5. Put tow vehicle manual transmission into first or reverse gear or automatic transmission into park. Turn off ignition. Set parking brake.
6. Block tow vehicle wheels and trailer wheels with chocks.
7. Check to ensure that bleed screws are at the 12 o'clock position, as shown.

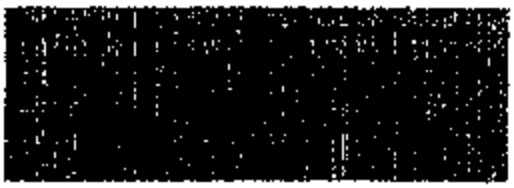

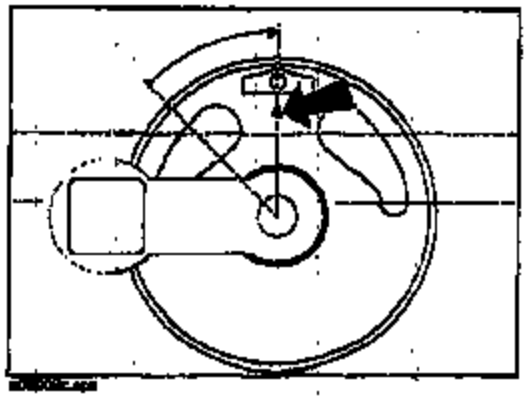

8. Remove trailer fenders for access to bleed screws.

   To remove fender:

   - Use 3/4" wrenches or socket (with backup) to remove 4 fender bolts (1).
   - Use 9/16" wrenches or socket (with backup) to remove center fender bolt (3).
   - Disconnect harness plug (2) and pull connector and rubber grommet through frame opening.
   - Remove mud flap (4).
   - To avoid scratching paint, carefully maneuver fender side-to-side and up to remove over tires.

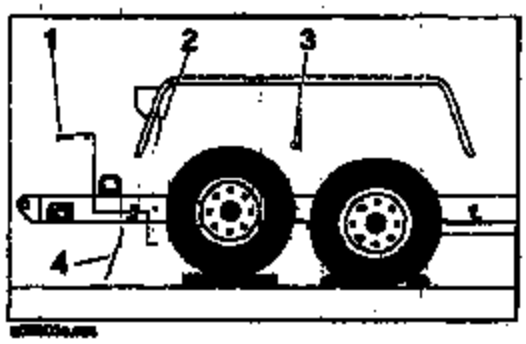

Stroke Brake Actuator & Bleed Brakes

1. Remove filler cap (A) by turning counterclockwise. Make sure actuator (master cylinder) is full of brake fluid. Use type DOT 3 or DOT 4 fluid.
2. Stroke actuator by pulling forward on cable attached to breakaway lever (B) until it locks in the first detent.
3. Use a suitable tool to pry the breakaway lever farther forward and lock into the second detent position.
4. With breakaway lever in second detent, bleed wheel cylinders in sequence shown on page 2.

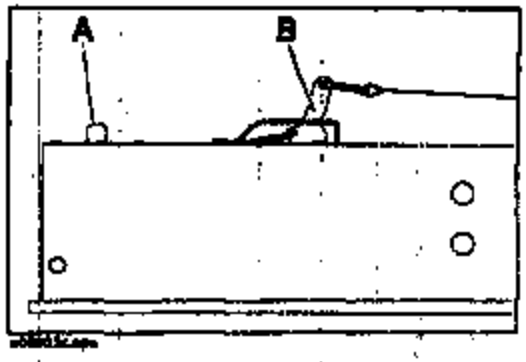

5. To bleed at each wheel:
   - Remove rubber dust cap. Use a 3/8" wrench to open and then close the bleed screw.
   - Re-stroke the actuator and lock into second detent position each time before repeating the bleeding process in the proper sequence.
   - Expelled air will be indicated by a hissing sound or bubbles as bleed screw is opened.
   - Repeat procedure at each wheel until a solid stream of fluid is obtained.
   - Check actuator (master cylinder) fluid level frequently.
   - Make sure fluid level is full after bleeding.
6. Wipe excess brake fluid from axle backing plates and other surfaces and replace dust cap on bleed screws.

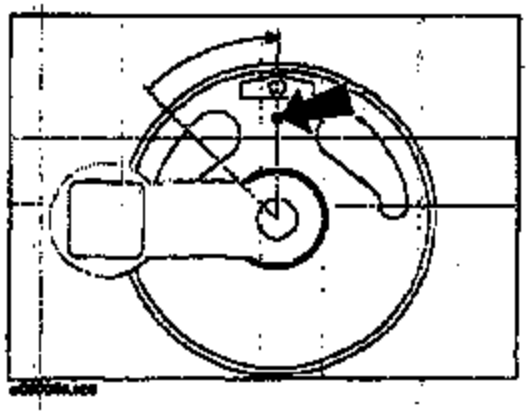

Finish Procedure and Test Brakes

1. Install fenders in reverse order of removal. Make sure fenders are level before tightening bolts.
2. Unlock actuator lever and remove chocks from wheels of trailer and tow vehicle.
3. Release parking brake and use tow vehicle to carefully pull trailer forward and off of wooden block.
4. Check to make sure trailer lights are working.
5. With actuator lever again locked in second detent, attempt to pull trailer forward slightly to test brakes.